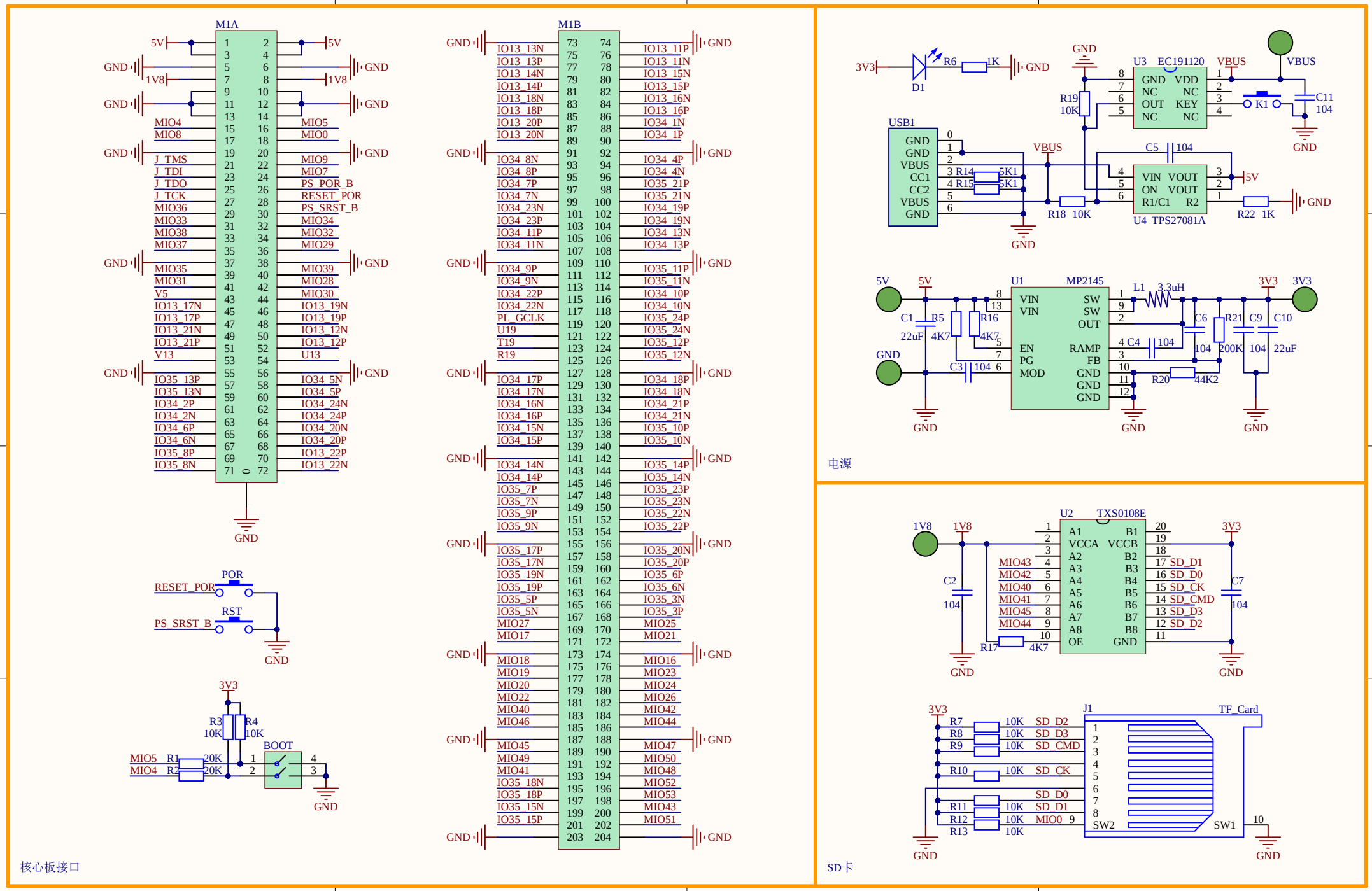
M1A
M1B
核心板接口
POR
RESET_POR
RST
PS_SRST_B
BOOT
U1 MP2145
U2 TXS0108E
U3 EC191120
U4 TPS27081A
USB1
J1 TF_Card
电源
SD卡

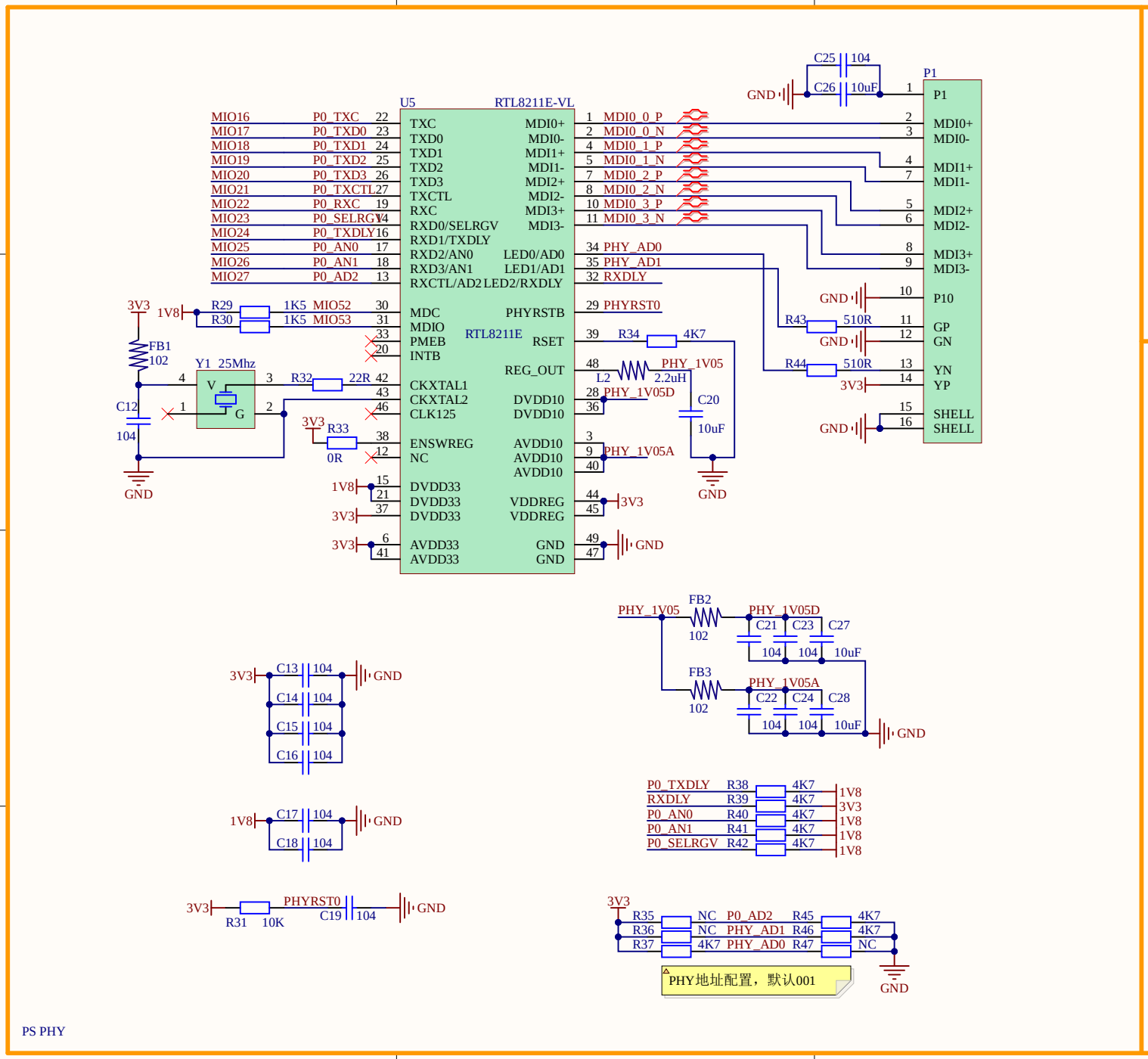
U5
RTL8211E-VL
RTL8211E
P1
TXC
TXD0
TXD1
TXD2
TXD3
TXCTL
RXC
RXD0/SELRGV
RXD1/TXDLY
RXD2/AN0
RXD3/AN1
RXCTL/AD2
MDC
MDIO
PMEB
INTB
CKXTAL1
CKXTAL2
CLK125
ENSWREG
NC
DVDD33
AVDD33
MDI0+
MDI0-
MDI1+
MDI1-
MDI2+
MDI2-
MDI3+
MDI3-
LED0/AD0
LED1/AD1
LED2/RXDLY
PHYRSTB
RSET
REG_OUT
DVDD10
AVDD10
VDDREG
GND
MIO16 P0_TXC
MIO17 P0_TXD0
MIO18 P0_TXD1
MIO19 P0_TXD2
MIO20 P0_TXD3
MIO21 P0_TXCTL
MIO22 P0_RXC
MIO23 P0_SELRGV
MIO24 P0_TXDLY
MIO25 P0_AN0
MIO26 P0_AN1
MIO27 P0_AD2
MIO52
MIO53
MDI0_0_P
MDI0_0_N
MDI0_1_P
MDI0_1_N
MDI0_2_P
MDI0_2_N
MDI0_3_P
MDI0_3_N
PHY_AD0
PHY_AD1
RXDLY
PHYRST0
PHY_1V05
PHY_1V05D
PHY_1V05A
3V3
1V8
GND
R29 1K5
R30 1K5
FB1 102
Y1 25Mhz
C12 104
R32 22R
R33 0R
R34 4K7
L2 2.2uH
C20 10uF
C25 104
C26 10uF
R43 510R
R44 510R
FB2 102
FB3 102
C21 104
C23 104
C27 10uF
C22 104
C24 104
C28 10uF
C13 104
C14 104
C15 104
C16 104
C17 104
C18 104
R31 10K
C19 104
R38 4K7
R39 4K7
R40 4K7
R41 4K7
R42 4K7
R35 NC
R36 NC
R37 4K7
R45 4K7
R46 4K7
R47 NC
PHY地址配置，默认001
PS PHY

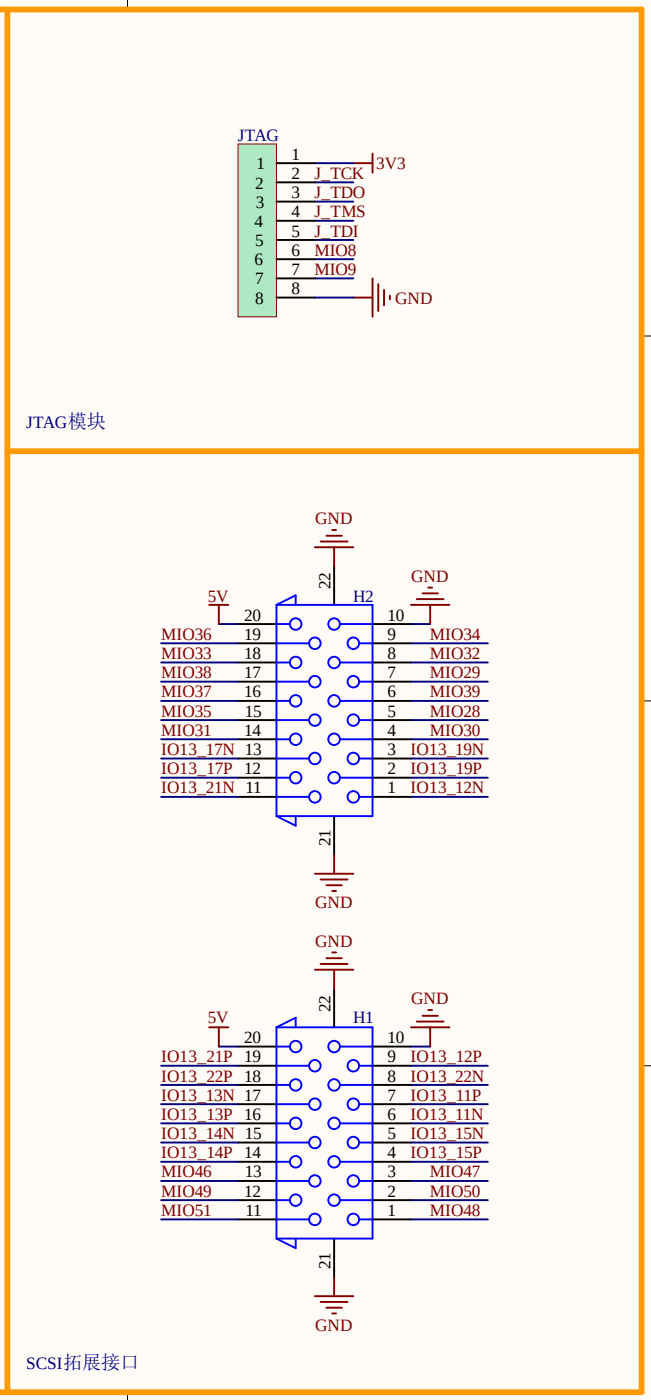
JTAG
1 3V3
2 J_TCK
3 J_TDO
4 J_TMS
5 J_TDI
6 MIO8
7 MIO9
8 GND
JTAG模块
H2
H1
5V
22
21
MIO36
MIO33
MIO38
MIO37
MIO35
MIO31
IO13_17N
IO13_17P
IO13_21N
MIO34
MIO32
MIO29
MIO39
MIO28
MIO30
IO13_19N
IO13_19P
IO13_12N
IO13_21P
IO13_22P
IO13_13N
IO13_13P
IO13_14N
IO13_14P
MIO46
MIO49
MIO51
IO13_12P
IO13_22N
IO13_11P
IO13_11N
IO13_15N
IO13_15P
MIO47
MIO50
MIO48
GND
SCSI拓展接口

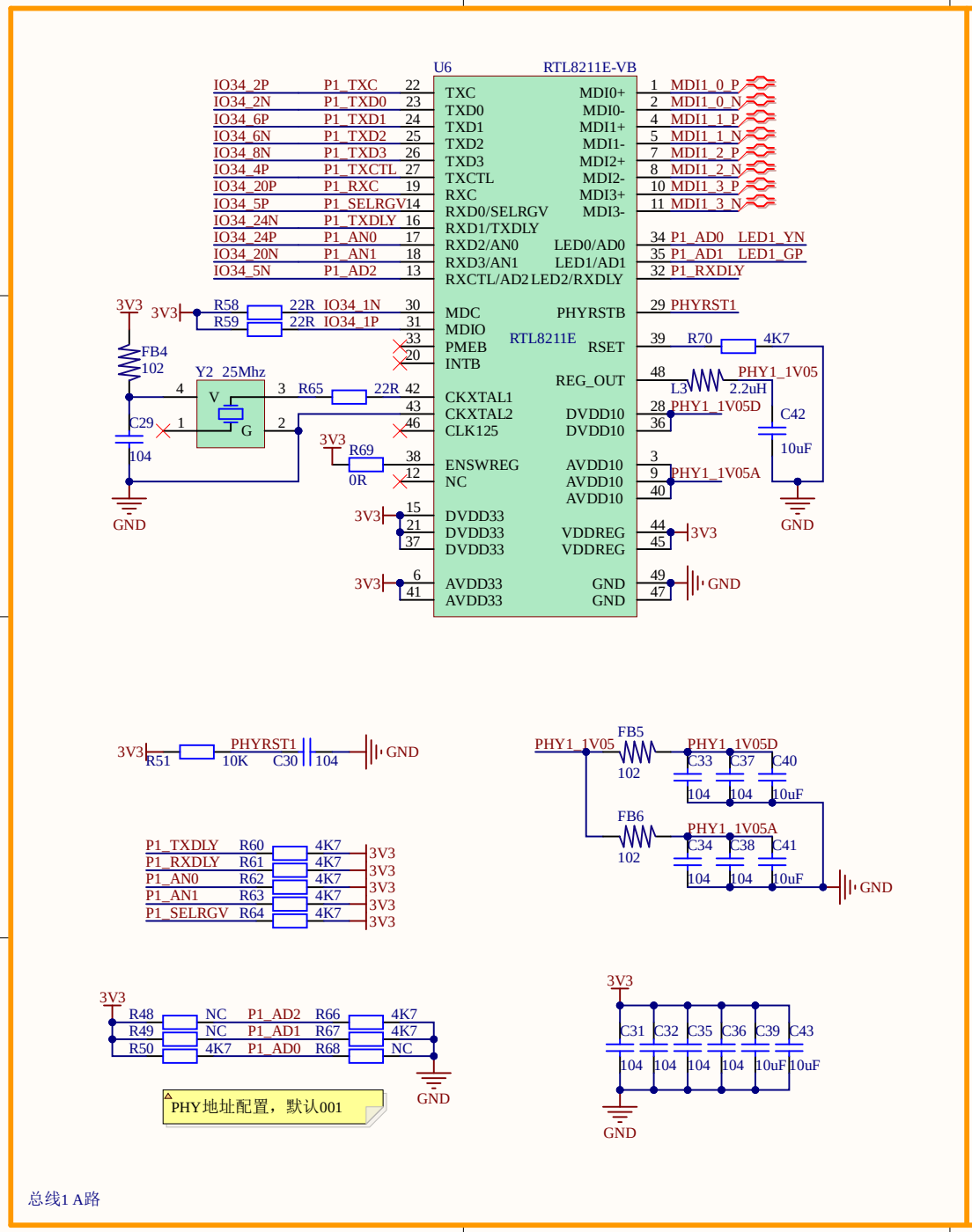
U6
RTL8211E-VB
RTL8211E
IO34_2P P1_TXC 22
IO34_2N P1_TXD0 23
IO34_6P P1_TXD1 24
IO34_6N P1_TXD2 25
IO34_8N P1_TXD3 26
IO34_4P P1_TXCTL 27
IO34_20P P1_RXC 19
IO34_5P P1_SELRGV 14
IO34_24N P1_TXDLY 16
IO34_24P P1_AN0 17
IO34_20N P1_AN1 18
IO34_5N P1_AD2 13
TXC
TXD0
TXD1
TXD2
TXD3
TXCTL
RXC
RXD0/SELRGV
RXD1/TXDLY
RXD2/AN0
RXD3/AN1
RXCTL/AD2
MDI0+ 1 MDI1_0_P
MDI0- 2 MDI1_0_N
MDI1+ 4 MDI1_1_P
MDI1- 5 MDI1_1_N
MDI2+ 7 MDI1_2_P
MDI2- 8 MDI1_2_N
MDI3+ 10 MDI1_3_P
MDI3- 11 MDI1_3_N
LED0/AD0 34 P1_AD0 LED1_YN
LED1/AD1 35 P1_AD1 LED1_GP
LED2/RXDLY 32 P1_RXDLY
MDC 30 IO34_1N
MDIO 31 IO34_1P
PMEB 33
INTB 20
CKXTAL1 42
CKXTAL2 43
CLK125 46
ENSWREG 38
NC 12
DVDD33 15 21 37
AVDD33 6 41
PHYRSTB 29 PHYRST1
RSET 39 R70 4K7
REG_OUT 48 L3 2.2uH PHY1_1V05
DVDD10 28 PHY1_1V05D 36
AVDD10 3 9 PHY1_1V05A 40
VDDREG 44 45 3V3
GND 49 47 GND
3V3
R58 22R
R59 22R
FB4 102
Y2 25Mhz
V
G
R65 22R
C29 104
C42 10uF
R69 0R
GND
R51 10K C30 104
PHYRST1
FB5 102
FB6 102
C33 C37 C40
C34 C38 C41
104 104 10uF
P1_TXDLY R60 4K7
P1_RXDLY R61 4K7
P1_AN0 R62 4K7
P1_AN1 R63 4K7
P1_SELRGV R64 4K7
R48 NC P1_AD2 R66 4K7
R49 NC P1_AD1 R67 4K7
R50 4K7 P1_AD0 R68 NC
PHY地址配置，默认001
C31 C32 C35 C36 C39 C43
104 104 104 104 10uF 10uF
总线1 A路

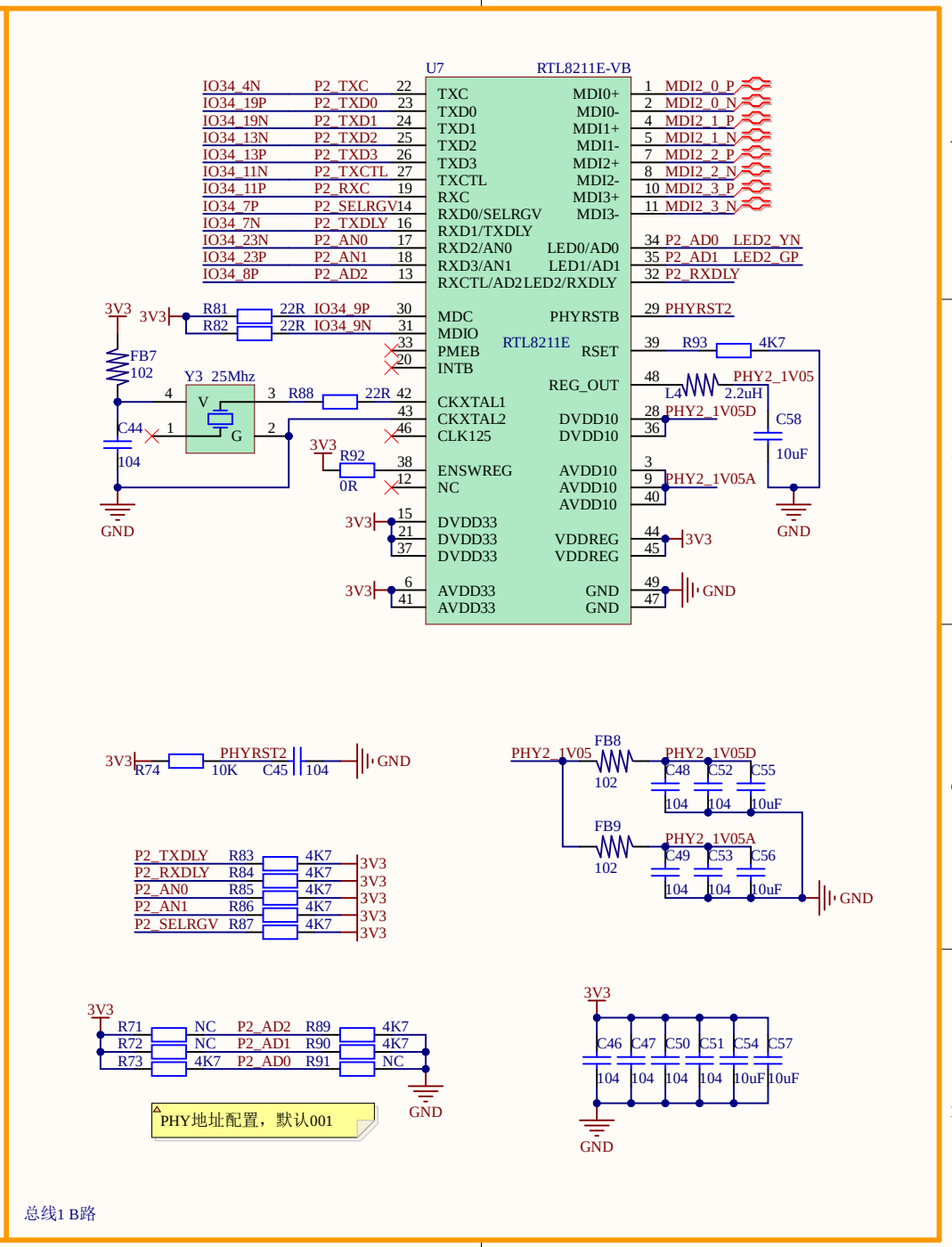
U7
RTL8211E-VB
RTL8211E
IO34_4N P2_TXC 22
IO34_19P P2_TXD0 23
IO34_19N P2_TXD1 24
IO34_13N P2_TXD2 25
IO34_13P P2_TXD3 26
IO34_11N P2_TXCTL 27
IO34_11P P2_RXC 19
IO34_7P P2_SELRGV 14
IO34_7N P2_TXDLY 16
IO34_23N P2_AN0 17
IO34_23P P2_AN1 18
IO34_8P P2_AD2 13
TXC
TXD0
TXD1
TXD2
TXD3
TXCTL
RXC
RXD0/SELRGV
RXD1/TXDLY
RXD2/AN0
RXD3/AN1
RXCTL/AD2
MDI0+ 1 MDI2_0_P
MDI0- 2 MDI2_0_N
MDI1+ 4 MDI2_1_P
MDI1- 5 MDI2_1_N
MDI2+ 7 MDI2_2_P
MDI2- 8 MDI2_2_N
MDI3+ 10 MDI2_3_P
MDI3- 11 MDI2_3_N
LED0/AD0 34 P2_AD0 LED2_YN
LED1/AD1 35 P2_AD1 LED2_GP
LED2/RXDLY 32 P2_RXDLY
MDC 30 IO34_9P
MDIO 31 IO34_9N
PMEB 33
INTB 20
CKXTAL1 42
CKXTAL2 43
CLK125 46
ENSWREG 38
NC 12
DVDD33 15 21 37
AVDD33 6 41
PHYRSTB 29 PHYRST2
RSET 39 R93 4K7
REG_OUT 48 L4 2.2uH PHY2_1V05
DVDD10 28 PHY2_1V05D 36
AVDD10 3 9 PHY2_1V05A 40
VDDREG 44 45 3V3
GND 49 47 GND
3V3
R81 22R
R82 22R
FB7 102
Y3 25Mhz
V
G
R88 22R
C44 104
C58 10uF
R92 0R
GND
R74 10K C45 104
PHYRST2
FB8 102
FB9 102
C48 C52 C55
C49 C53 C56
104 104 10uF
P2_TXDLY R83 4K7
P2_RXDLY R84 4K7
P2_AN0 R85 4K7
P2_AN1 R86 4K7
P2_SELRGV R87 4K7
R71 NC P2_AD2 R89 4K7
R72 NC P2_AD1 R90 4K7
R73 4K7 P2_AD0 R91 NC
PHY地址配置，默认001
C46 C47 C50 C51 C54 C57
104 104 104 104 10uF 10uF
总线1 B路

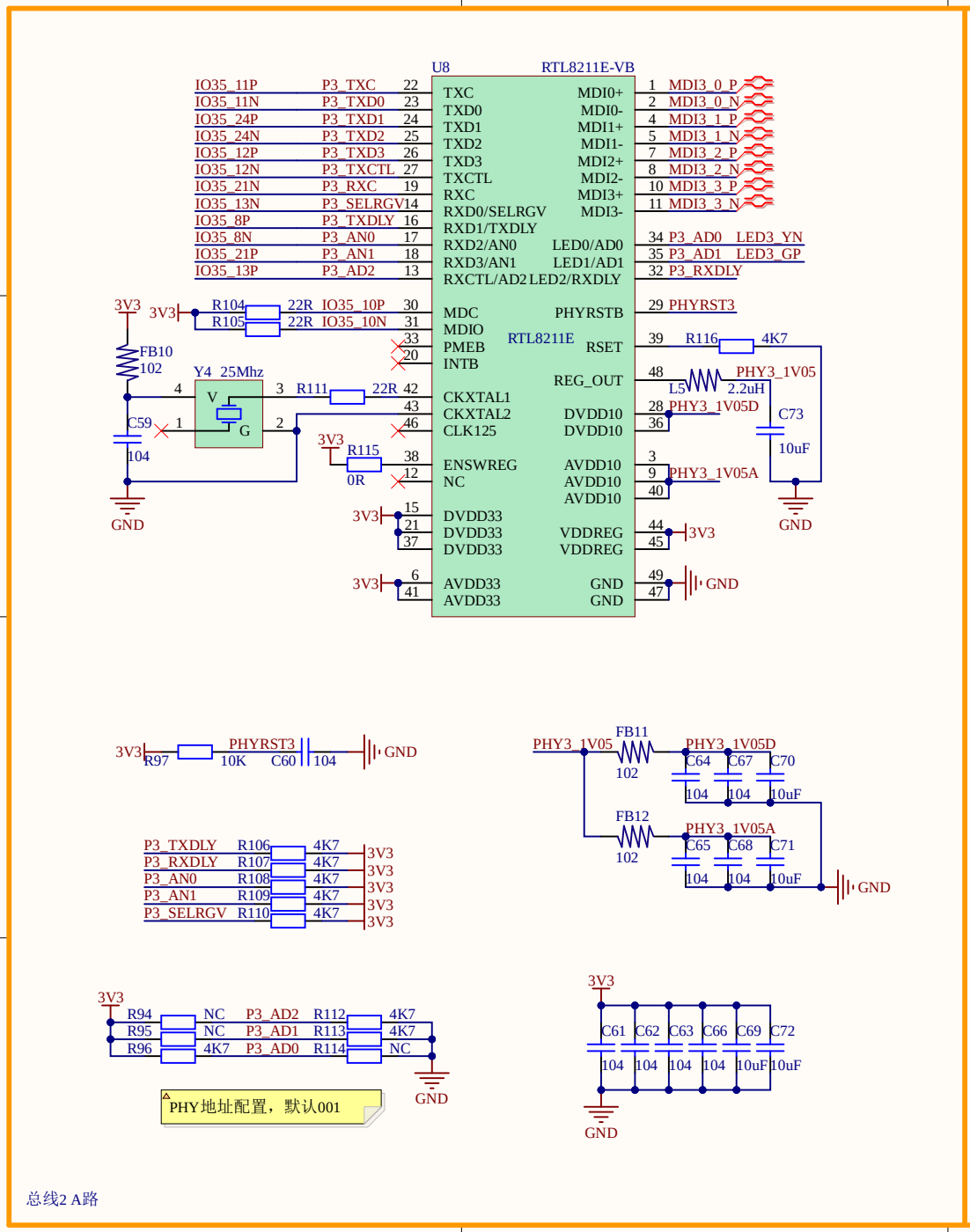
U8
RTL8211E-VB
RTL8211E
IO35_11P P3_TXC 22
IO35_11N P3_TXD0 23
IO35_24P P3_TXD1 24
IO35_24N P3_TXD2 25
IO35_12P P3_TXD3 26
IO35_12N P3_TXCTL 27
IO35_21N P3_RXC 19
IO35_13N P3_SELRGV 14
IO35_8P P3_TXDLY 16
IO35_8N P3_AN0 17
IO35_21P P3_AN1 18
IO35_13P P3_AD2 13
TXC
TXD0
TXD1
TXD2
TXD3
TXCTL
RXC
RXD0/SELRGV
RXD1/TXDLY
RXD2/AN0
RXD3/AN1
RXCTL/AD2
MDC
MDIO
PMEB
INTB
CKXTAL1
CKXTAL2
CLK125
ENSWREG
NC
DVDD33
AVDD33
MDI0+
MDI0-
MDI1+
MDI1-
MDI2+
MDI2-
MDI3+
MDI3-
LED0/AD0
LED1/AD1
LED2/RXDLY
PHYRSTB
RSET
REG_OUT
DVDD10
AVDD10
VDDREG
GND
1 MDI3_0_P
2 MDI3_0_N
4 MDI3_1_P
5 MDI3_1_N
7 MDI3_2_P
8 MDI3_2_N
10 MDI3_3_P
11 MDI3_3_N
34 P3_AD0 LED3_YN
35 P3_AD1 LED3_GP
32 P3_RXDLY
29 PHYRST3
39 R116 4K7
48 L5 2.2uH PHY3_1V05
28 PHY3_1V05D
36 C73 10uF
3 9 40 PHY3_1V05A
44 45 3V3
49 47 GND
3V3 R104 22R IO35_10P 30
R105 22R IO35_10N 31
FB10 102
Y4 25Mhz
R111 22R 42
C59 104
R115 0R 38
PHYRST3 R97 10K C60 104
PHY3_1V05 FB11 102 PHY3_1V05D C64 C67 C70 104 104 10uF
FB12 102 PHY3_1V05A C65 C68 C71 104 104 10uF
P3_TXDLY R106 4K7
P3_RXDLY R107 4K7
P3_AN0 R108 4K7
P3_AN1 R109 4K7
P3_SELRGV R110 4K7
R94 NC P3_AD2 R112 4K7
R95 NC P3_AD1 R113 4K7
R96 4K7 P3_AD0 R114 NC
PHY地址配置，默认001
C61 C62 C63 C66 C69 C72 104 104 104 104 10uF 10uF

总线2 A路

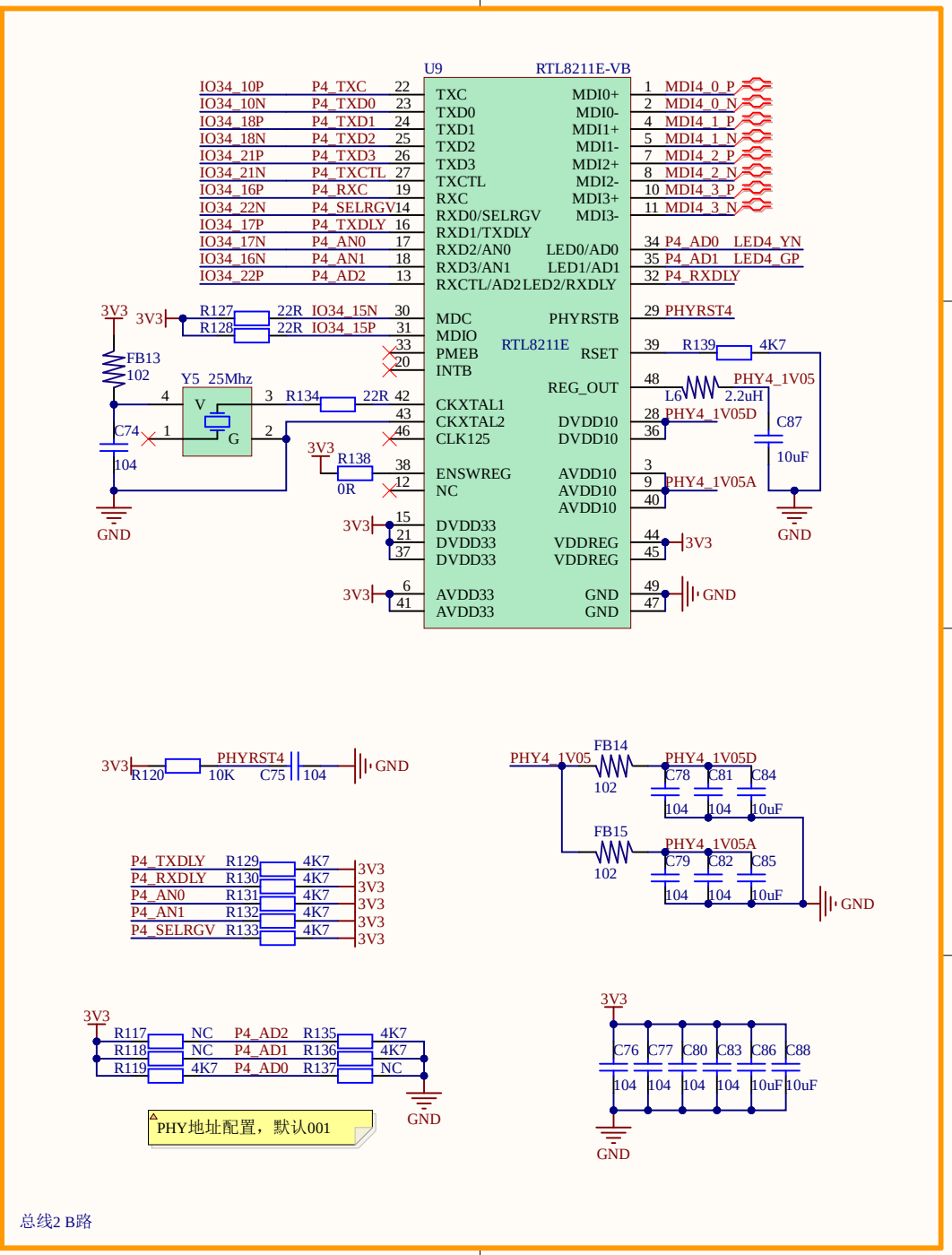
U9
RTL8211E-VB
RTL8211E
IO34_10P P4_TXC 22
IO34_10N P4_TXD0 23
IO34_18P P4_TXD1 24
IO34_18N P4_TXD2 25
IO34_21P P4_TXD3 26
IO34_21N P4_TXCTL 27
IO34_16P P4_RXC 19
IO34_22N P4_SELRGV 14
IO34_17P P4_TXDLY 16
IO34_17N P4_AN0 17
IO34_16N P4_AN1 18
IO34_22P P4_AD2 13
TXC
TXD0
TXD1
TXD2
TXD3
TXCTL
RXC
RXD0/SELRGV
RXD1/TXDLY
RXD2/AN0
RXD3/AN1
RXCTL/AD2
MDC
MDIO
PMEB
INTB
CKXTAL1
CKXTAL2
CLK125
ENSWREG
NC
DVDD33
AVDD33
MDI0+
MDI0-
MDI1+
MDI1-
MDI2+
MDI2-
MDI3+
MDI3-
LED0/AD0
LED1/AD1
LED2/RXDLY
PHYRSTB
RSET
REG_OUT
DVDD10
AVDD10
VDDREG
GND
1 MDI4_0_P
2 MDI4_0_N
4 MDI4_1_P
5 MDI4_1_N
7 MDI4_2_P
8 MDI4_2_N
10 MDI4_3_P
11 MDI4_3_N
34 P4_AD0 LED4_YN
35 P4_AD1 LED4_GP
32 P4_RXDLY
29 PHYRST4
39 R139 4K7
48 L6 2.2uH PHY4_1V05
28 PHY4_1V05D
36 C87 10uF
3 9 40 PHY4_1V05A
44 45 3V3
49 47 GND
3V3 R127 22R IO34_15N 30
R128 22R IO34_15P 31
FB13 102
Y5 25Mhz
R134 22R 42
C74 104
R138 0R 38
PHYRST4 R120 10K C75 104
PHY4_1V05 FB14 102 PHY4_1V05D C78 C81 C84 104 104 10uF
FB15 102 PHY4_1V05A C79 C82 C85 104 104 10uF
P4_TXDLY R129 4K7
P4_RXDLY R130 4K7
P4_AN0 R131 4K7
P4_AN1 R132 4K7
P4_SELRGV R133 4K7
R117 NC P4_AD2 R135 4K7
R118 NC P4_AD1 R136 4K7
R119 4K7 P4_AD0 R137 NC
PHY地址配置，默认001
C76 C77 C80 C83 C86 C88 104 104 104 104 10uF 10uF

总线2 B路

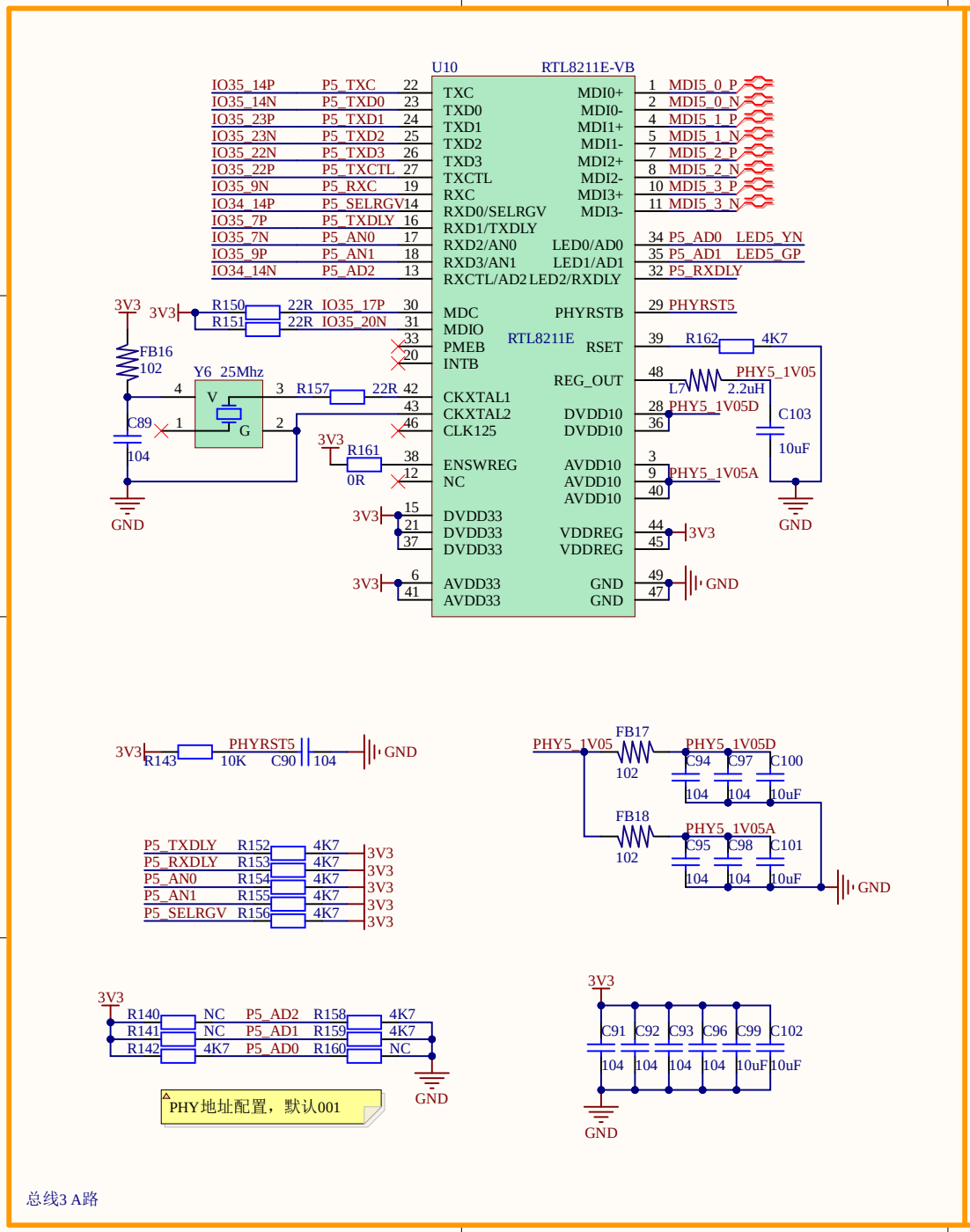
U10
RTL8211E-VB
RTL8211E
IO35_14P P5_TXC 22
IO35_14N P5_TXD0 23
IO35_23P P5_TXD1 24
IO35_23N P5_TXD2 25
IO35_22N P5_TXD3 26
IO35_22P P5_TXCTL 27
IO35_9N P5_RXC 19
IO34_14P P5_SELRGV 14
IO35_7P P5_TXDLY 16
IO35_7N P5_AN0 17
IO35_9P P5_AN1 18
IO34_14N P5_AD2 13
TXC
TXD0
TXD1
TXD2
TXD3
TXCTL
RXC
RXD0/SELRGV
RXD1/TXDLY
RXD2/AN0
RXD3/AN1
RXCTL/AD2
MDI0+ 1 MDI5_0_P
MDI0- 2 MDI5_0_N
MDI1+ 4 MDI5_1_P
MDI1- 5 MDI5_1_N
MDI2+ 7 MDI5_2_P
MDI2- 8 MDI5_2_N
MDI3+ 10 MDI5_3_P
MDI3- 11 MDI5_3_N
LED0/AD0 34 P5_AD0 LED5_YN
LED1/AD1 35 P5_AD1 LED5_GP
LED2/RXDLY 32 P5_RXDLY
MDC
MDIO
PMEB
INTB
PHYRSTB 29 PHYRST5
RSET 39 R162 4K7
REG_OUT 48 L7 2.2uH PHY5_1V05
CKXTAL1
CKXTAL2
CLK125
DVDD10 28 PHY5_1V05D
DVDD10 36
C103 10uF
ENSWREG
NC
AVDD10 3
AVDD10 9 PHY5_1V05A
AVDD10 40
DVDD33 15
DVDD33 21
DVDD33 37
VDDREG 44
VDDREG 45
AVDD33 6
AVDD33 41
GND 49
GND 47
3V3
R150 22R IO35_17P 30
R151 22R IO35_20N 31
33
20
FB16 102
Y6 25Mhz
V
G
4
3
2
1
R157 22R 42
43
46
C89 104
R161 0R 38
12
GND
R143 10K PHYRST5 C90 104
PHY5_1V05 FB17 102 PHY5_1V05D
C94 C97 C100
104 104 10uF
FB18 102 PHY5_1V05A
C95 C98 C101
104 104 10uF
P5_TXDLY R152 4K7
P5_RXDLY R153 4K7
P5_AN0 R154 4K7
P5_AN1 R155 4K7
P5_SELRGV R156 4K7
R140 NC P5_AD2 R158 4K7
R141 NC P5_AD1 R159 4K7
R142 4K7 P5_AD0 R160 NC
PHY地址配置，默认001
C91 C92 C93 C96 C99 C102
104 104 104 104 10uF 10uF

总线3 A路

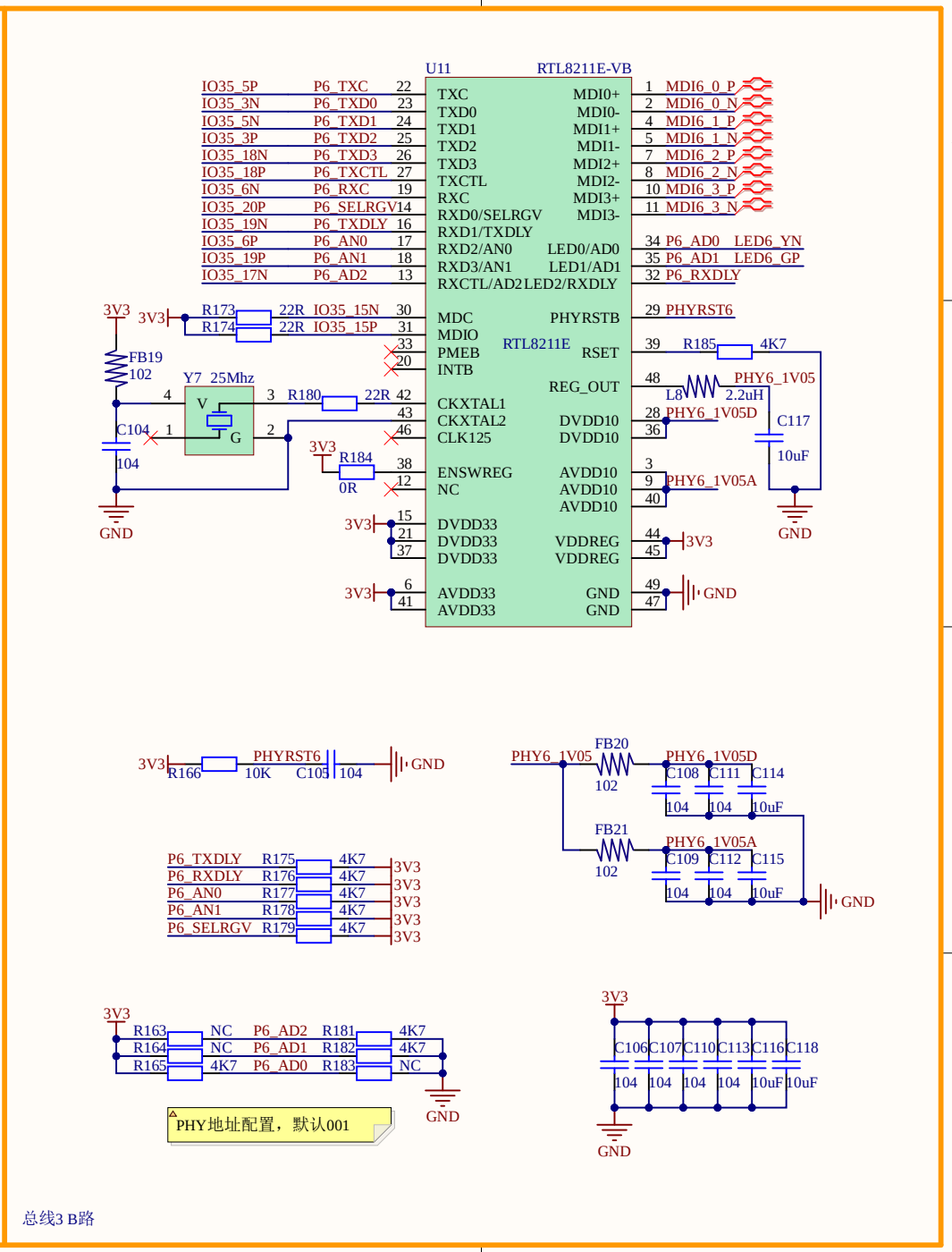
U11
RTL8211E-VB
RTL8211E
IO35_5P P6_TXC 22
IO35_3N P6_TXD0 23
IO35_5N P6_TXD1 24
IO35_3P P6_TXD2 25
IO35_18N P6_TXD3 26
IO35_18P P6_TXCTL 27
IO35_6N P6_RXC 19
IO35_20P P6_SELRGV 14
IO35_19N P6_TXDLY 16
IO35_6P P6_AN0 17
IO35_19P P6_AN1 18
IO35_17N P6_AD2 13
TXC
TXD0
TXD1
TXD2
TXD3
TXCTL
RXC
RXD0/SELRGV
RXD1/TXDLY
RXD2/AN0
RXD3/AN1
RXCTL/AD2
MDI0+ 1 MDI6_0_P
MDI0- 2 MDI6_0_N
MDI1+ 4 MDI6_1_P
MDI1- 5 MDI6_1_N
MDI2+ 7 MDI6_2_P
MDI2- 8 MDI6_2_N
MDI3+ 10 MDI6_3_P
MDI3- 11 MDI6_3_N
LED0/AD0 34 P6_AD0 LED6_YN
LED1/AD1 35 P6_AD1 LED6_GP
LED2/RXDLY 32 P6_RXDLY
MDC
MDIO
PMEB
INTB
PHYRSTB 29 PHYRST6
RSET 39 R185 4K7
REG_OUT 48 L8 2.2uH PHY6_1V05
CKXTAL1
CKXTAL2
CLK125
DVDD10 28 PHY6_1V05D
DVDD10 36
C117 10uF
ENSWREG
NC
AVDD10 3
AVDD10 9 PHY6_1V05A
AVDD10 40
DVDD33 15
DVDD33 21
DVDD33 37
VDDREG 44
VDDREG 45
AVDD33 6
AVDD33 41
GND 49
GND 47
3V3
R173 22R IO35_15N 30
R174 22R IO35_15P 31
33
20
FB19 102
Y7 25Mhz
V
G
4
3
2
1
R180 22R 42
43
46
C104 104
R184 0R 38
12
GND
R166 10K PHYRST6 C103 104
PHY6_1V05 FB20 102 PHY6_1V05D
C108 C111 C114
104 104 10uF
FB21 102 PHY6_1V05A
C109 C112 C115
104 104 10uF
P6_TXDLY R175 4K7
P6_RXDLY R176 4K7
P6_AN0 R177 4K7
P6_AN1 R178 4K7
P6_SELRGV R179 4K7
R163 NC P6_AD2 R181 4K7
R164 NC P6_AD1 R182 4K7
R165 4K7 P6_AD0 R183 NC
PHY地址配置，默认001
C106 C107 C110 C113 C116 C118
104 104 104 104 10uF 10uF

总线3 B路

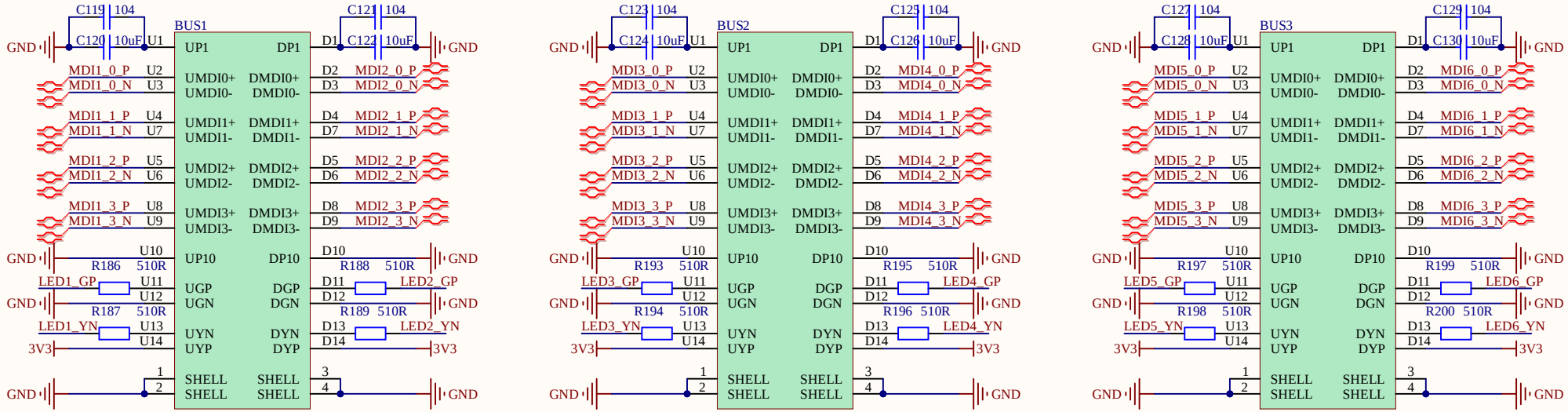

PL RJ45

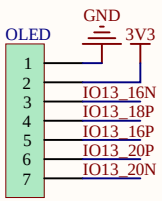

OLED模块

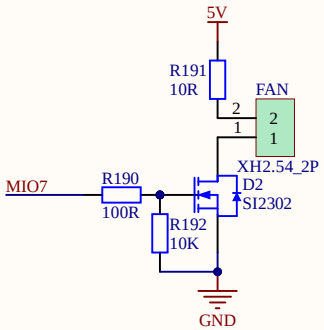

散热风扇

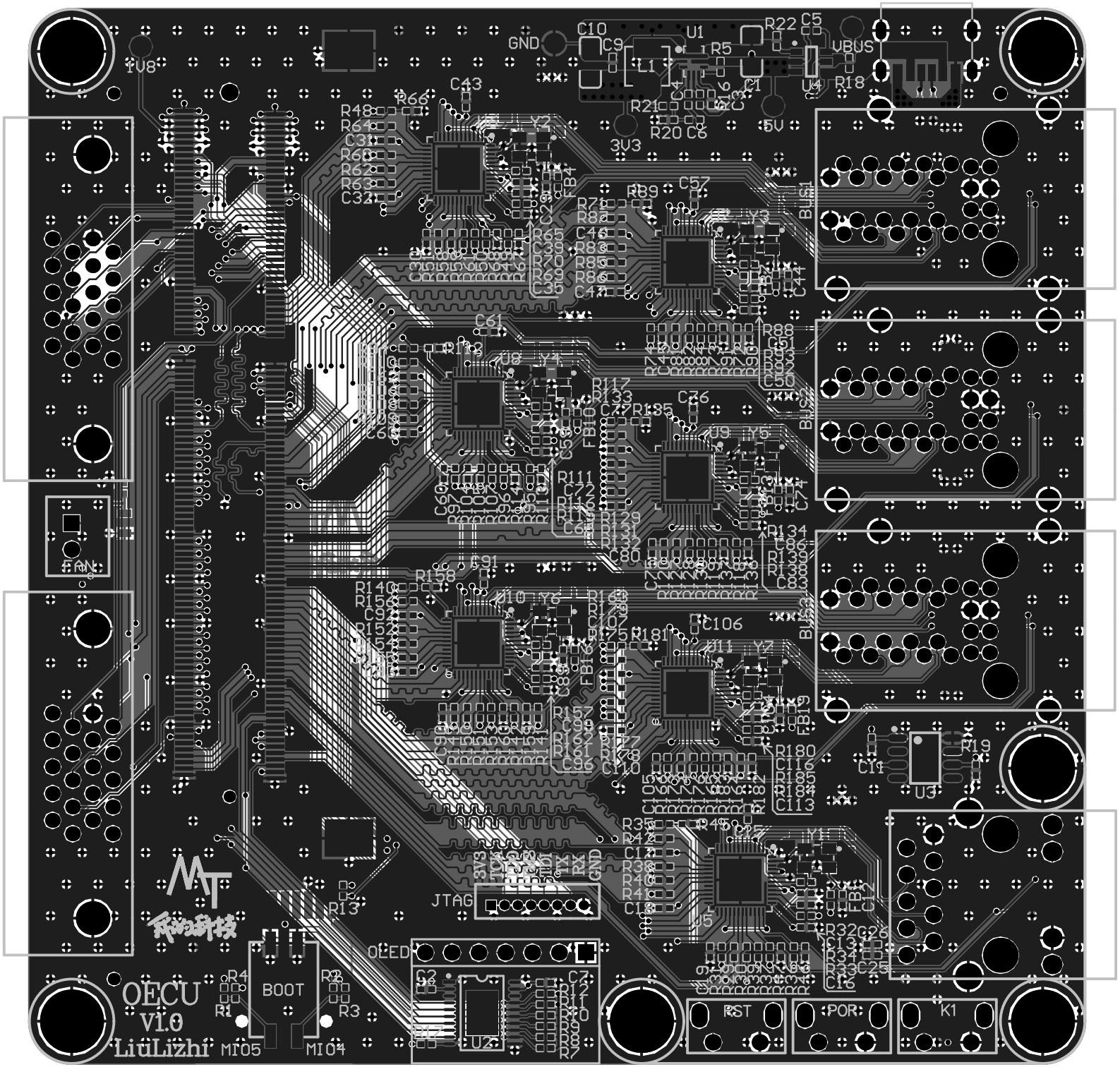
OECU
V1.0
LiuLizhi
BOOT
JTAG
OLED
RST
POR
K1
FAN
BUS1
BUS2
BUS3
VBUS
GND
3V3
5V