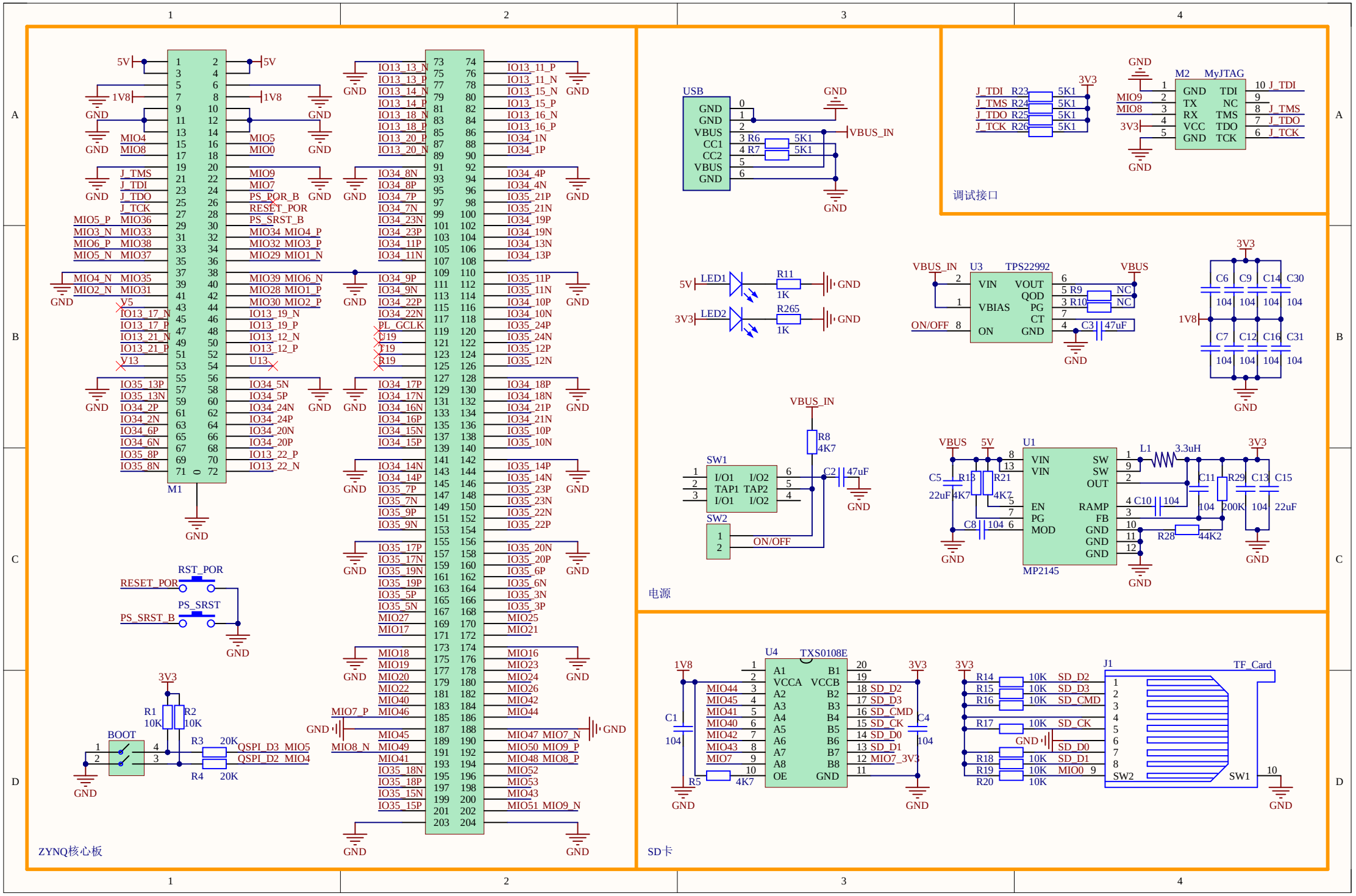
ZYNQ核心板
M1
5V
1V8
GND
MIO4
MIO8
MIO5
MIO0
J_TMS
J_TDI
J_TDO
J_TCK
MIO9
MIO7
PS_POR_B
RESET_POR
PS_SRST_B
MIO5_P MIO36
MIO3_N MIO33
MIO6_P MIO38
MIO5_N MIO37
MIO34 MIO4_P
MIO32 MIO3_P
MIO29 MIO1_N
MIO4_N MIO35
MIO2_N MIO31
MIO39 MIO6_N
MIO28 MIO1_P
MIO30 MIO2_P
V5
IO13_17_N
IO13_17_P
IO13_21_N
IO13_21_P
V13
IO13_19_N
IO13_19_P
IO13_12_N
IO13_12_P
U13
IO35_13P
IO35_13N
IO34_2P
IO34_2N
IO34_6P
IO34_6N
IO35_8P
IO35_8N
IO34_5N
IO34_5P
IO34_24N
IO34_24P
IO34_20N
IO34_20P
IO13_22_P
IO13_22_N
RST_POR
PS_SRST
3V3
R1 10K
R2 10K
BOOT
R3 20K
R4 20K
QSPI_D3 MIO5
QSPI_D2 MIO4
IO13_13_N
IO13_13_P
IO13_14_N
IO13_14_P
IO13_18_N
IO13_18_P
IO13_20_P
IO13_20_N
IO34_8N
IO34_8P
IO34_7P
IO34_7N
IO34_23N
IO34_23P
IO34_11P
IO34_11N
IO34_9P
IO34_9N
IO34_22P
IO34_22N
PL_GCLK
C19
T19
R19
IO34_17P
IO34_17N
IO34_16N
IO34_16P
IO34_15N
IO34_15P
IO34_14N
IO34_14P
IO35_7P
IO35_7N
IO35_9P
IO35_9N
IO35_17P
IO35_17N
IO35_19N
IO35_19P
IO35_5P
IO35_5N
MIO27
MIO17
MIO18
MIO19
MIO20
MIO22
MIO40
MIO46
MIO7_P
MIO45
MIO8_N
MIO49
MIO41
IO35_18N
IO35_18P
IO35_15N
IO35_15P
IO13_11_P
IO13_11_N
IO13_15_N
IO13_15_P
IO13_16_N
IO13_16_P
IO34_1N
IO34_1P
IO34_4P
IO34_4N
IO35_21P
IO35_21N
IO34_19P
IO34_19N
IO34_13N
IO34_13P
IO35_11P
IO35_11N
IO34_10P
IO34_10N
IO35_24P
IO35_24N
IO35_12P
IO35_12N
IO34_18P
IO34_18N
IO34_21P
IO34_21N
IO35_10P
IO35_10N
IO35_14P
IO35_14N
IO35_23P
IO35_23N
IO35_22N
IO35_22P
IO35_20N
IO35_20P
IO35_6P
IO35_6N
IO35_3N
IO35_3P
MIO25
MIO21
MIO16
MIO23
MIO24
MIO26
MIO42
MIO44
MIO47 MIO7_N
MIO50 MIO9_P
MIO48 MIO8_P
MIO52
MIO53
MIO43
MIO51 MIO9_N
USB
GND
VBUS
CC1
CC2
R6 5K1
R7 5K1
VBUS_IN
LED1
LED2
R11 1K
R265 1K
VBUS_IN
U3
TPS22992
VIN
VBIAS
ON
VOUT
QOD
PG
CT
GND
ON/OFF
VBUS
R9 NC
R10 NC
C3 47uF
3V3
C6 C9 C14 C30
C7 C12 C16 C31
104
1V8
SW1
SW2
I/O1 I/O2
TAP1 TAP2
ON/OFF
R8 4K7
C2 47uF
VBUS 5V
U1
MP2145
VIN
SW
OUT
EN
PG
MOD
RAMP
FB
C5 22uF
R13 4K7
R21 4K7
C8 104
L1 3.3uH
C10 104
R28 44K2
C11 104
R29 200K
C13 104
C15 22uF
调试接口
M2 MyJTAG
J_TDI R23 5K1
J_TMS R24 5K1
J_TDO R25 5K1
J_TCK R26 5K1
MIO9
MIO8
TDI
TMS
TDO
TCK
NC
电源
U4 TXS0108E
A1 B1
VCCA VCCB
A2 B2
A3 B3
A4 B4
A5 B5
A6 B6
A7 B7
A8 B8
OE GND
MIO44
MIO45
MIO41
MIO40
MIO42
MIO43
MIO7
SD_D2
SD_D3
SD_CMD
SD_CK
SD_D0
SD_D1
MIO7_3V3
C1 104
C4 104
R5 4K7
R14 10K SD_D2
R15 10K SD_D3
R16 10K SD_CMD
R17 10K SD_CK
R18 10K SD_D1
R19 10K MIO0
R20 10K
J1 TF_Card
SW2
SW1
SD卡

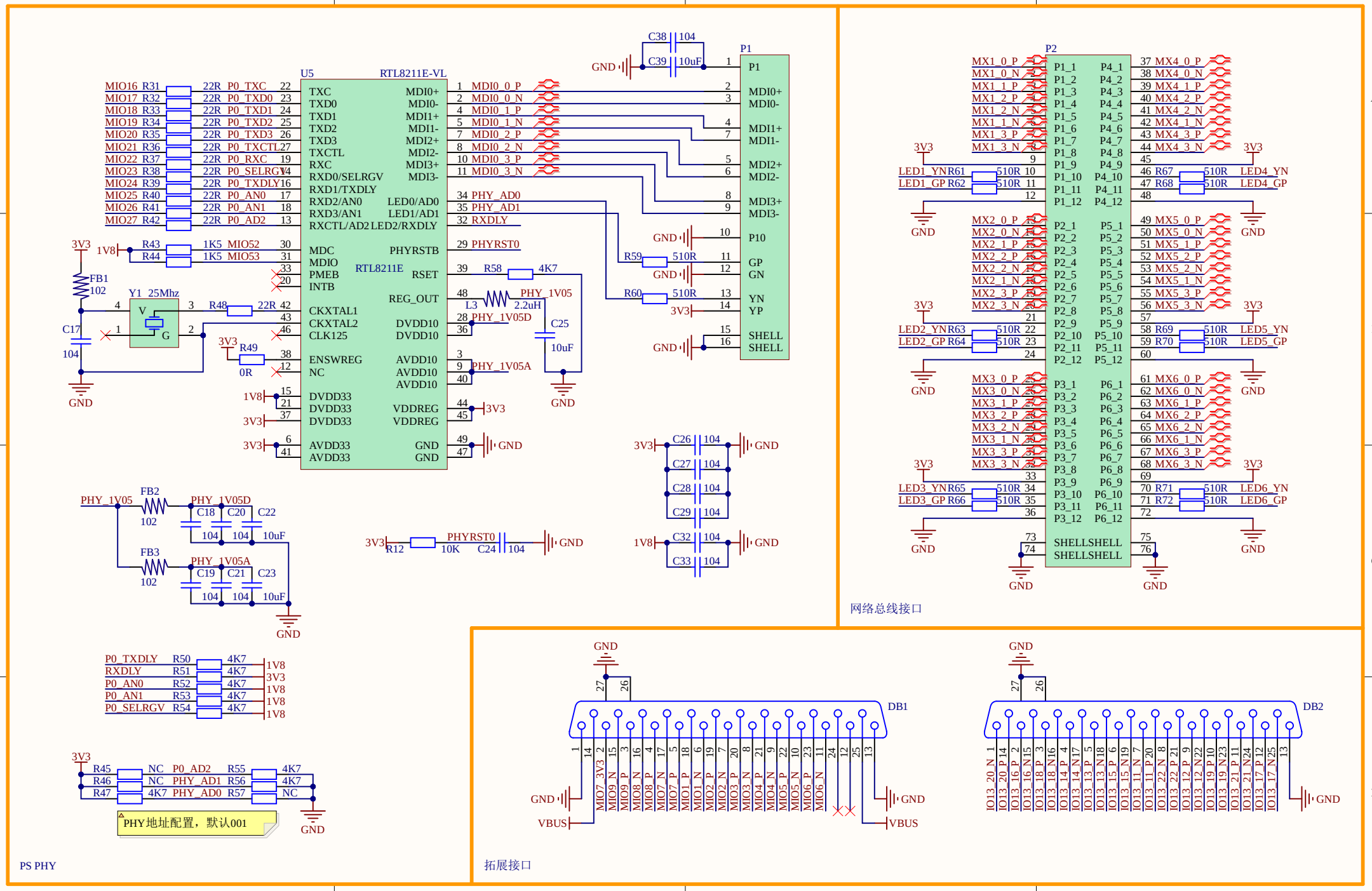
U5
RTL8211E-VL
RTL8211E
P1
P2
DB1
DB2
PHY地址配置，默认001
PS PHY
网络总线接口
拓展接口

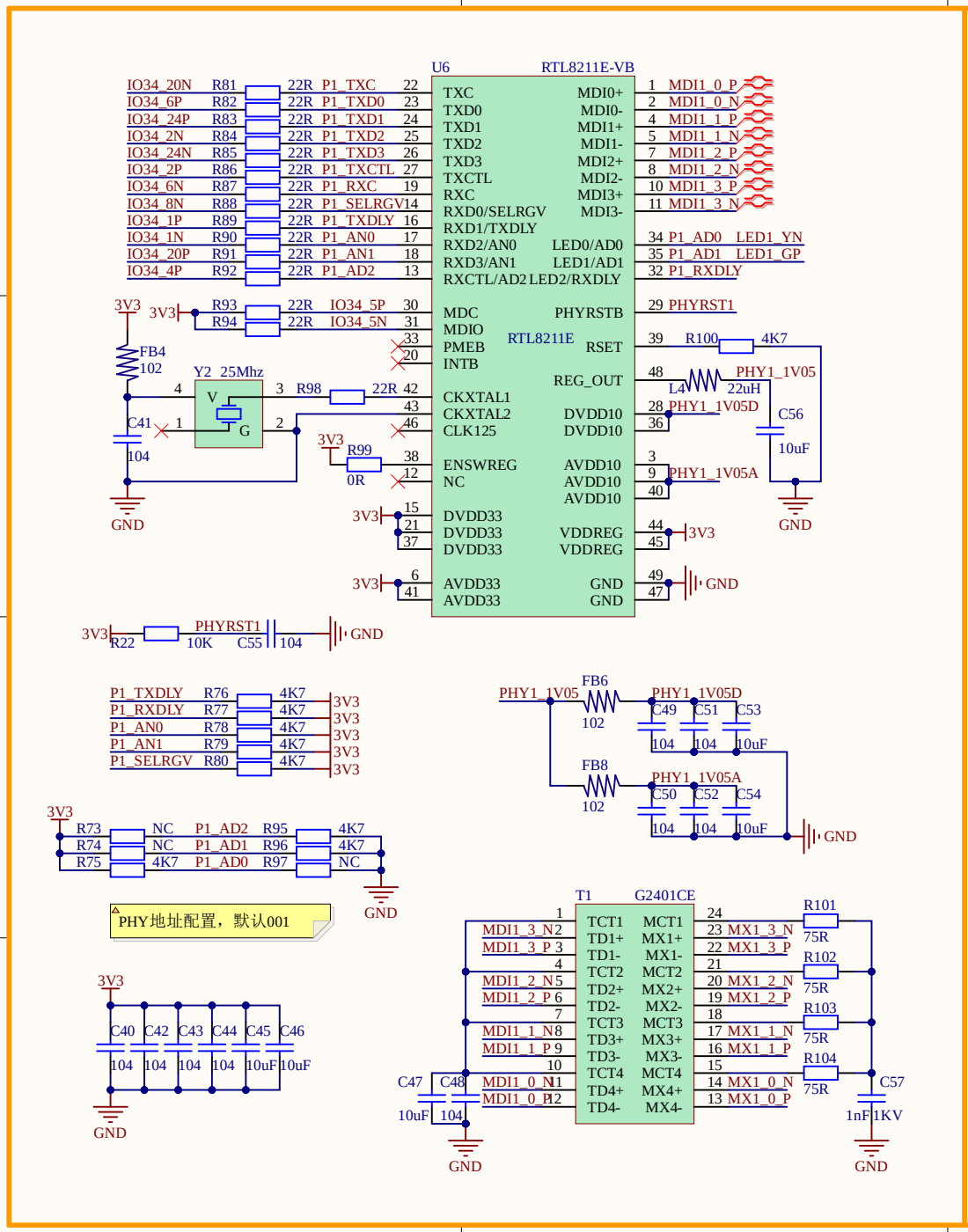
U6
RTL8211E-VB
RTL8211E
IO34_20N R81 22R P1_TXC 22
IO34_6P R82 22R P1_TXD0 23
IO34_24P R83 22R P1_TXD1 24
IO34_2N R84 22R P1_TXD2 25
IO34_24N R85 22R P1_TXD3 26
IO34_2P R86 22R P1_TXCTL 27
IO34_6N R87 22R P1_RXC 19
IO34_8N R88 22R P1_SELRGV 14
IO34_1P R89 22R P1_TXDLY 16
IO34_1N R90 22R P1_AN0 17
IO34_20P R91 22R P1_AN1 18
IO34_4P R92 22R P1_AD2 13
R93 22R IO34_5P 30
R94 22R IO34_5N 31
R98 22R 42
R99 0R 38
R100 4K7
L4 22uH
C56 10uF
C41 104
FB4 102
Y2 25Mhz
PHY1_1V05
PHY1_1V05D
PHY1_1V05A
PHYRST1
R22 10K C55 104
P1_TXDLY R76 4K7
P1_RXDLY R77 4K7
P1_AN0 R78 4K7
P1_AN1 R79 4K7
P1_SELRGV R80 4K7
R73 NC P1_AD2 R95 4K7
R74 NC P1_AD1 R96 4K7
R75 4K7 P1_AD0 R97 NC
PHY地址配置，默认001
FB6 102
FB8 102
C49 C51 C53 104 104 10uF
C50 C52 C54 104 104 10uF
C40 C42 C43 C44 C45 C46 104 104 104 104 10uF 10uF
T1 G2401CE
R101 75R
R102 75R
R103 75R
R104 75R
C47 C48 10uF 104
C57 1nF 1KV
GND
3V3

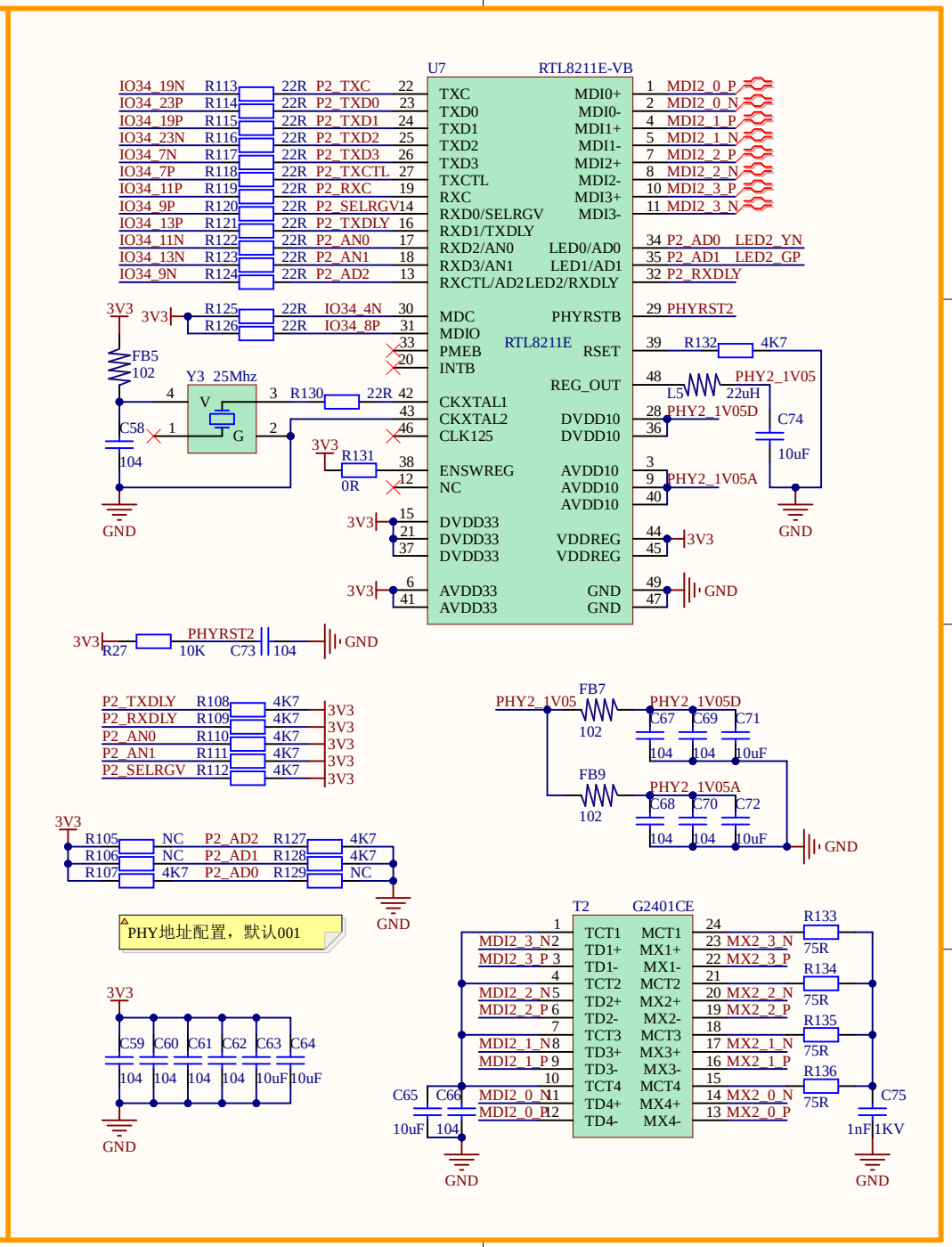
U7
RTL8211E-VB
RTL8211E
IO34_19N R113 22R P2_TXC 22
IO34_23P R114 22R P2_TXD0 23
IO34_19P R115 22R P2_TXD1 24
IO34_23N R116 22R P2_TXD2 25
IO34_7N R117 22R P2_TXD3 26
IO34_7P R118 22R P2_TXCTL 27
IO34_11P R119 22R P2_RXC 19
IO34_9P R120 22R P2_SELRGV 14
IO34_13P R121 22R P2_TXDLY 16
IO34_11N R122 22R P2_AN0 17
IO34_13N R123 22R P2_AN1 18
IO34_9N R124 22R P2_AD2 13
R125 22R IO34_4N 30
R126 22R IO34_8P 31
R130 22R 42
R131 0R 38
R132 4K7
L5 22uH
C74 10uF
C58 104
FB5 102
Y3 25Mhz
PHY2_1V05
PHY2_1V05D
PHY2_1V05A
PHYRST2
R27 10K C73 104
P2_TXDLY R108 4K7
P2_RXDLY R109 4K7
P2_AN0 R110 4K7
P2_AN1 R111 4K7
P2_SELRGV R112 4K7
R105 NC P2_AD2 R127 4K7
R106 NC P2_AD1 R128 4K7
R107 4K7 P2_AD0 R129 NC
PHY地址配置，默认001
FB7 102
FB9 102
C67 C69 C71 104 104 10uF
C68 C70 C72 104 104 10uF
C59 C60 C61 C62 C63 C64 104 104 104 104 10uF 10uF
T2 G2401CE
R133 75R
R134 75R
R135 75R
R136 75R
C65 C66 10uF 104
C75 1nF 1KV
GND
3V3

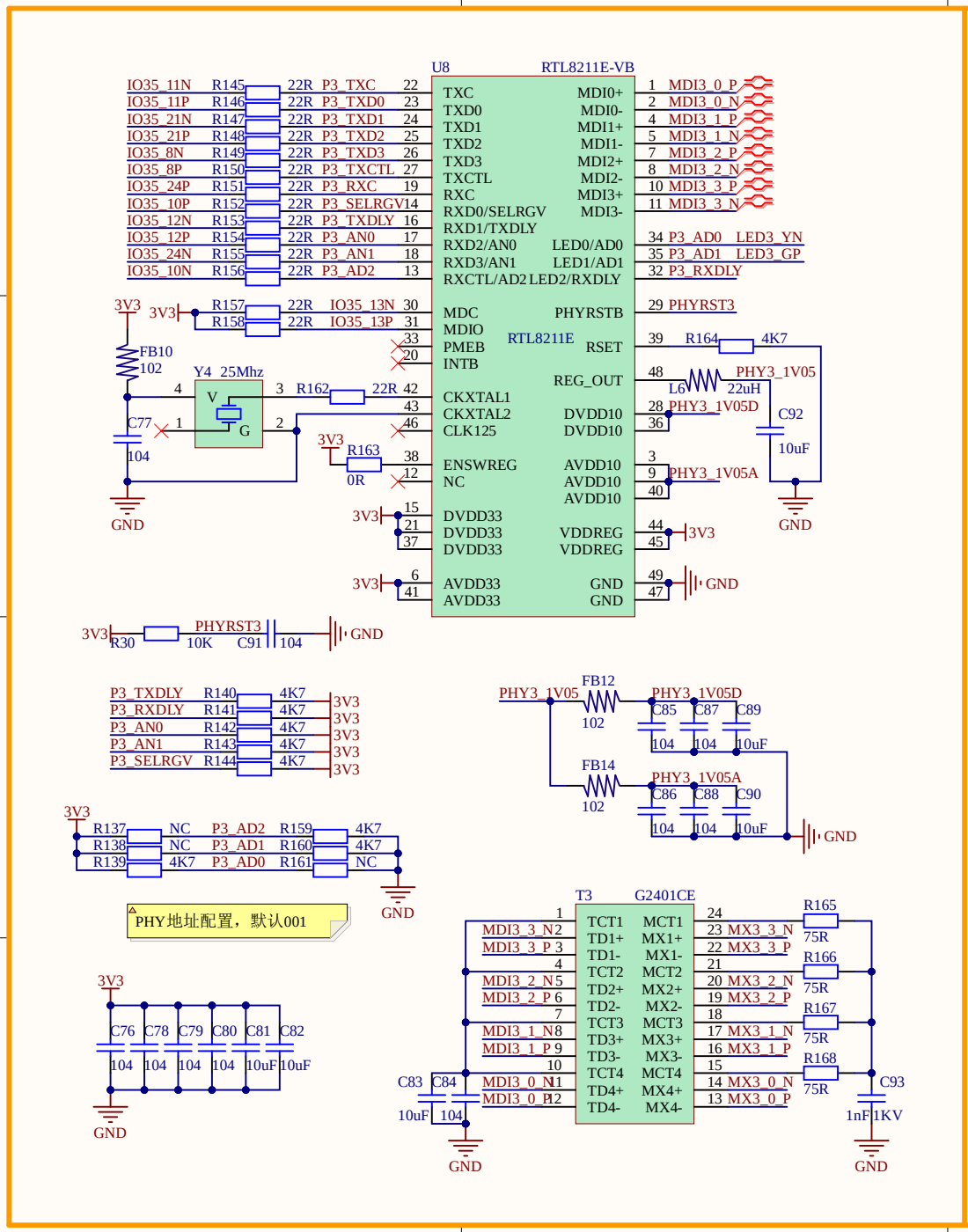
U8
RTL8211E-VB
RTL8211E
TXC
TXD0
TXD1
TXD2
TXD3
TXCTL
RXC
RXD0/SELRGV
RXD1/TXDLY
RXD2/AN0
RXD3/AN1
RXCTL/AD2
MDC
MDIO
PMEB
INTB
CKXTAL1
CKXTAL2
CLK125
ENSWREG
NC
DVDD33
AVDD33
MDI0+
MDI0-
MDI1+
MDI1-
MDI2+
MDI2-
MDI3+
MDI3-
LED0/AD0
LED1/AD1
LED2/RXDLY
PHYRSTB
RSET
REG_OUT
DVDD10
AVDD10
VDDREG
GND
IO35_11N R145 22R P3_TXC
IO35_11P R146 22R P3_TXD0
IO35_21N R147 22R P3_TXD1
IO35_21P R148 22R P3_TXD2
IO35_8N R149 22R P3_TXD3
IO35_8P R150 22R P3_TXCTL
IO35_24P R151 22R P3_RXC
IO35_10P R152 22R P3_SELRGV
IO35_12N R153 22R P3_TXDLY
IO35_12P R154 22R P3_AN0
IO35_24N R155 22R P3_AN1
IO35_10N R156 22R P3_AD2
R157 22R IO35_13N
R158 22R IO35_13P
MDI3_0_P
MDI3_0_N
MDI3_1_P
MDI3_1_N
MDI3_2_P
MDI3_2_N
MDI3_3_P
MDI3_3_N
P3_AD0 LED3_YN
P3_AD1 LED3_GP
P3_RXDLY
PHYRST3
R164 4K7
L6 22uH
PHY3_1V05
PHY3_1V05D
C92 10uF
PHY3_1V05A
3V3
FB10 102
Y4 25Mhz
R162 22R
C77 104
R163 0R
R30 10K
PHYRST3 C91 104
P3_TXDLY R140 4K7
P3_RXDLY R141 4K7
P3_AN0 R142 4K7
P3_AN1 R143 4K7
P3_SELRGV R144 4K7
FB12 102
FB14 102
C85 C87 C89
C86 C88 C90
104 104 10uF
R137 NC P3_AD2 R159 4K7
R138 NC P3_AD1 R160 4K7
R139 4K7 P3_AD0 R161 NC
PHY地址配置，默认001
C76 C78 C79 C80 C81 C82
104 104 104 104 10uF 10uF
T3 G2401CE
TCT1 MCT1
TD1+ MX1+
TD1- MX1-
TCT2 MCT2
TD2+ MX2+
TD2- MX2-
TCT3 MCT3
TD3+ MX3+
TD3- MX3-
TCT4 MCT4
TD4+ MX4+
TD4- MX4-
MDI3_3_N MDI3_3_P MDI3_2_N MDI3_2_P MDI3_1_N MDI3_1_P MDI3_0_N MDI3_0_P
MX3_3_N MX3_3_P MX3_2_N MX3_2_P MX3_1_N MX3_1_P MX3_0_N MX3_0_P
R165 R166 R167 R168 75R
C83 C84 10uF 104
C93 1nF 1KV

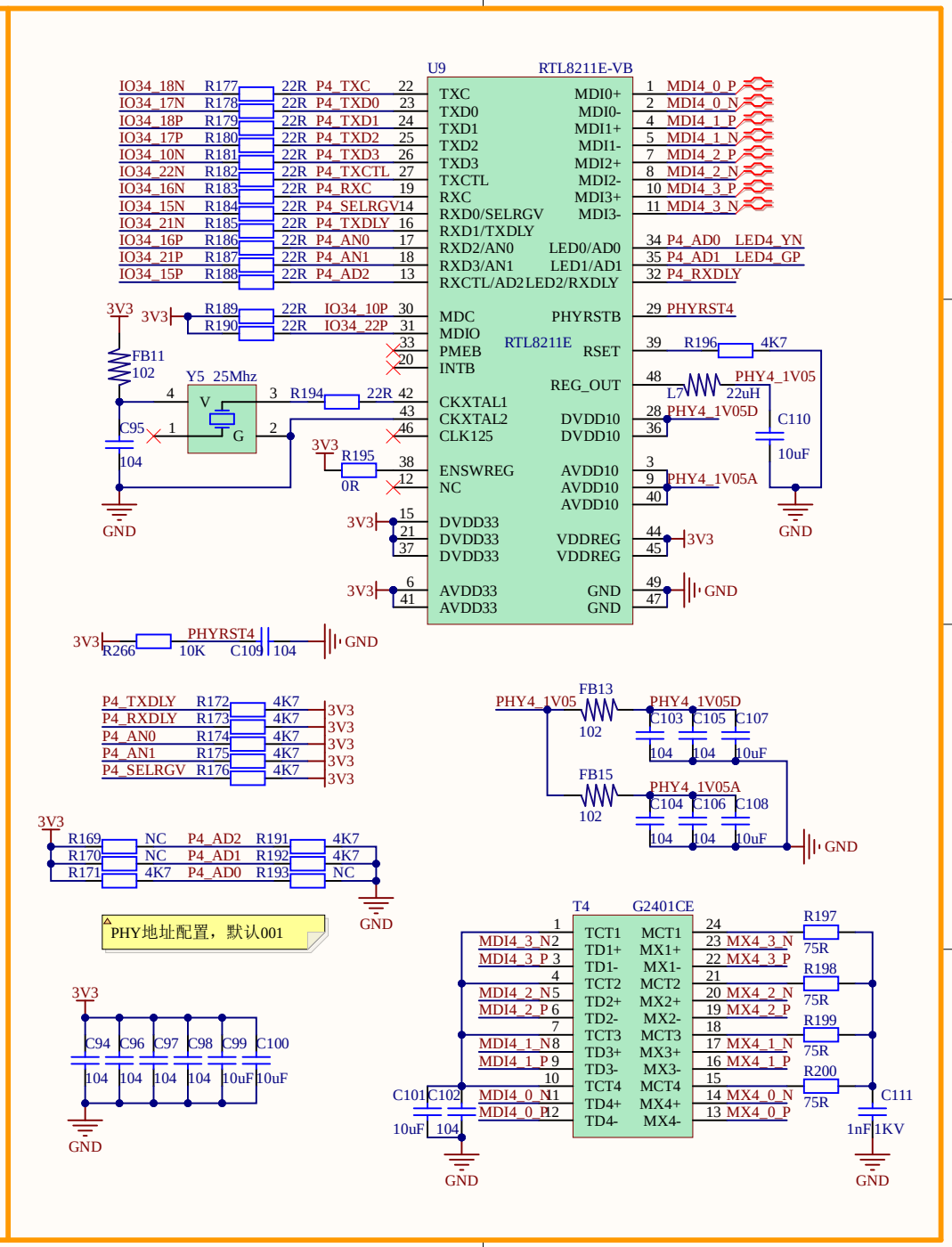
U9
RTL8211E-VB
RTL8211E
TXC
TXD0
TXD1
TXD2
TXD3
TXCTL
RXC
RXD0/SELRGV
RXD1/TXDLY
RXD2/AN0
RXD3/AN1
RXCTL/AD2
MDC
MDIO
PMEB
INTB
CKXTAL1
CKXTAL2
CLK125
ENSWREG
NC
DVDD33
AVDD33
MDI0+
MDI0-
MDI1+
MDI1-
MDI2+
MDI2-
MDI3+
MDI3-
LED0/AD0
LED1/AD1
LED2/RXDLY
PHYRSTB
RSET
REG_OUT
DVDD10
AVDD10
VDDREG
GND
IO34_18N R177 22R P4_TXC
IO34_17N R178 22R P4_TXD0
IO34_18P R179 22R P4_TXD1
IO34_17P R180 22R P4_TXD2
IO34_10N R181 22R P4_TXD3
IO34_22N R182 22R P4_TXCTL
IO34_16N R183 22R P4_RXC
IO34_15N R184 22R P4_SELRGV
IO34_21N R185 22R P4_TXDLY
IO34_16P R186 22R P4_AN0
IO34_21P R187 22R P4_AN1
IO34_15P R188 22R P4_AD2
R189 22R IO34_10P
R190 22R IO34_22P
MDI4_0_P
MDI4_0_N
MDI4_1_P
MDI4_1_N
MDI4_2_P
MDI4_2_N
MDI4_3_P
MDI4_3_N
P4_AD0 LED4_YN
P4_AD1 LED4_GP
P4_RXDLY
PHYRST4
R196 4K7
L7 22uH
PHY4_1V05
PHY4_1V05D
C110 10uF
PHY4_1V05A
3V3
FB11 102
Y5 25Mhz
R194 22R
C95 104
R195 0R
R266 10K
PHYRST4 C109 104
P4_TXDLY R172 4K7
P4_RXDLY R173 4K7
P4_AN0 R174 4K7
P4_AN1 R175 4K7
P4_SELRGV R176 4K7
FB13 102
FB15 102
C103 C105 C107
C104 C106 C108
104 104 10uF
R169 NC P4_AD2 R191 4K7
R170 NC P4_AD1 R192 4K7
R171 4K7 P4_AD0 R193 NC
PHY地址配置，默认001
C94 C96 C97 C98 C99 C100
104 104 104 104 10uF 10uF
T4 G2401CE
TCT1 MCT1
TD1+ MX1+
TD1- MX1-
TCT2 MCT2
TD2+ MX2+
TD2- MX2-
TCT3 MCT3
TD3+ MX3+
TD3- MX3-
TCT4 MCT4
TD4+ MX4+
TD4- MX4-
MDI4_3_N MDI4_3_P MDI4_2_N MDI4_2_P MDI4_1_N MDI4_1_P MDI4_0_N MDI4_0_P
MX4_3_N MX4_3_P MX4_2_N MX4_2_P MX4_1_N MX4_1_P MX4_0_N MX4_0_P
R197 R198 R199 R200 75R
C101 C102 10uF 104
C111 1nF 1KV

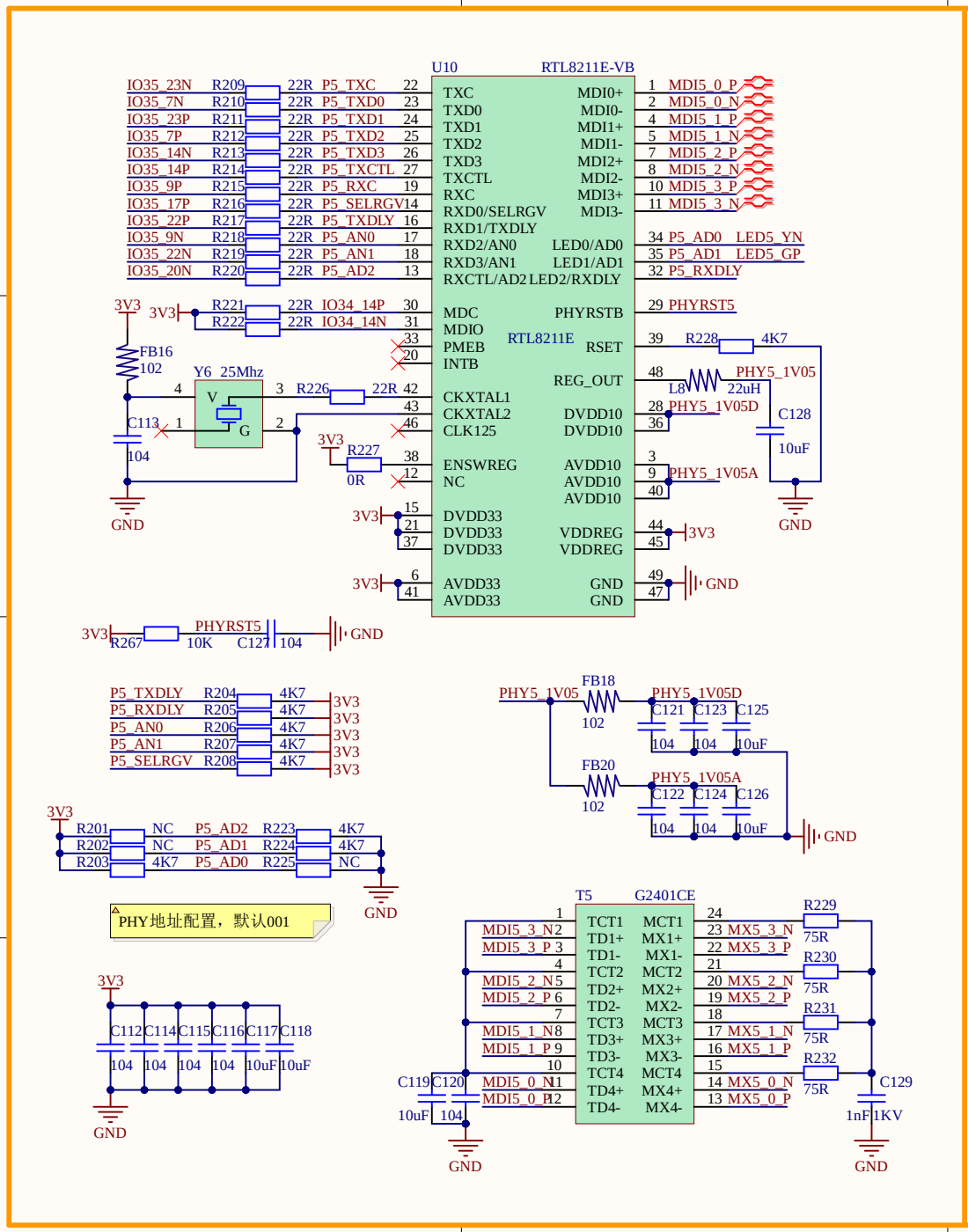
U10 RTL8211E-VB
IO35_23N R209 22R P5_TXC 22
IO35_7N R210 22R P5_TXD0 23
IO35_23P R211 22R P5_TXD1 24
IO35_7P R212 22R P5_TXD2 25
IO35_14N R213 22R P5_TXD3 26
IO35_14P R214 22R P5_TXCTL 27
IO35_9P R215 22R P5_RXC 19
IO35_17P R216 22R P5_SELRGV 14
IO35_22P R217 22R P5_TXDLY 16
IO35_9N R218 22R P5_AN0 17
IO35_22N R219 22R P5_AN1 18
IO35_20N R220 22R P5_AD2 13
3V3 R221 22R IO34_14P 30
R222 22R IO34_14N 31
FB16 102
Y6 25Mhz
C113 104
R226 22R
R227 0R
TXC
TXD0
TXD1
TXD2
TXD3
TXCTL
RXC
RXD0/SELRGV
RXD1/TXDLY
RXD2/AN0
RXD3/AN1
RXCTL/AD2
MDC
MDIO
PMEB
INTB
CKXTAL1
CKXTAL2
CLK125
ENSWREG
NC
DVDD33
AVDD33
MDI0+
MDI0-
MDI1+
MDI1-
MDI2+
MDI2-
MDI3+
MDI3-
LED0/AD0
LED1/AD1
LED2/RXDLY
PHYRSTB
RTL8211E
RSET
REG_OUT
DVDD10
AVDD10
VDDREG
GND
1 MDI5_0_P
2 MDI5_0_N
4 MDI5_1_P
5 MDI5_1_N
7 MDI5_2_P
8 MDI5_2_N
10 MDI5_3_P
11 MDI5_3_N
34 P5_AD0 LED5_YN
35 P5_AD1 LED5_GP
32 P5_RXDLY
29 PHYRST5
39 R228 4K7
48 L8 22uH PHY5_1V05
28 PHY5_1V05D
C128 10uF
9 PHY5_1V05A
44 45 3V3
49 47 GND
R267 10K PHYRST5 C127 104
P5_TXDLY R204 4K7 3V3
P5_RXDLY R205 4K7 3V3
P5_AN0 R206 4K7 3V3
P5_AN1 R207 4K7 3V3
P5_SELRGV R208 4K7 3V3
R201 NC P5_AD2 R223 4K7
R202 NC P5_AD1 R224 4K7
R203 4K7 P5_AD0 R225 NC
PHY5_1V05 FB18 102 PHY5_1V05D
C121 C123 C125 104 104 10uF
FB20 102 PHY5_1V05A
C122 C124 C126 104 104 10uF
PHY地址配置，默认001
C112 C114 C115 C116 C117 C118 104 104 104 104 10uF 10uF
T5 G2401CE
MDI5_3_N 2
MDI5_3_P 3
MDI5_2_N 5
MDI5_2_P 6
MDI5_1_N 8
MDI5_1_P 9
MDI5_0_N 11
MDI5_0_P 12
TCT1 TD1+ TD1- TCT2 TD2+ TD2- TCT3 TD3+ TD3- TCT4 TD4+ TD4-
MCT1 MX1+ MX1- MCT2 MX2+ MX2- MCT3 MX3+ MX3- MCT4 MX4+ MX4-
23 MX5_3_N
22 MX5_3_P
20 MX5_2_N
19 MX5_2_P
17 MX5_1_N
16 MX5_1_P
14 MX5_0_N
13 MX5_0_P
R229 75R
R230 75R
R231 75R
R232 75R
C119 C120 10uF 104
C129 1nF 1KV

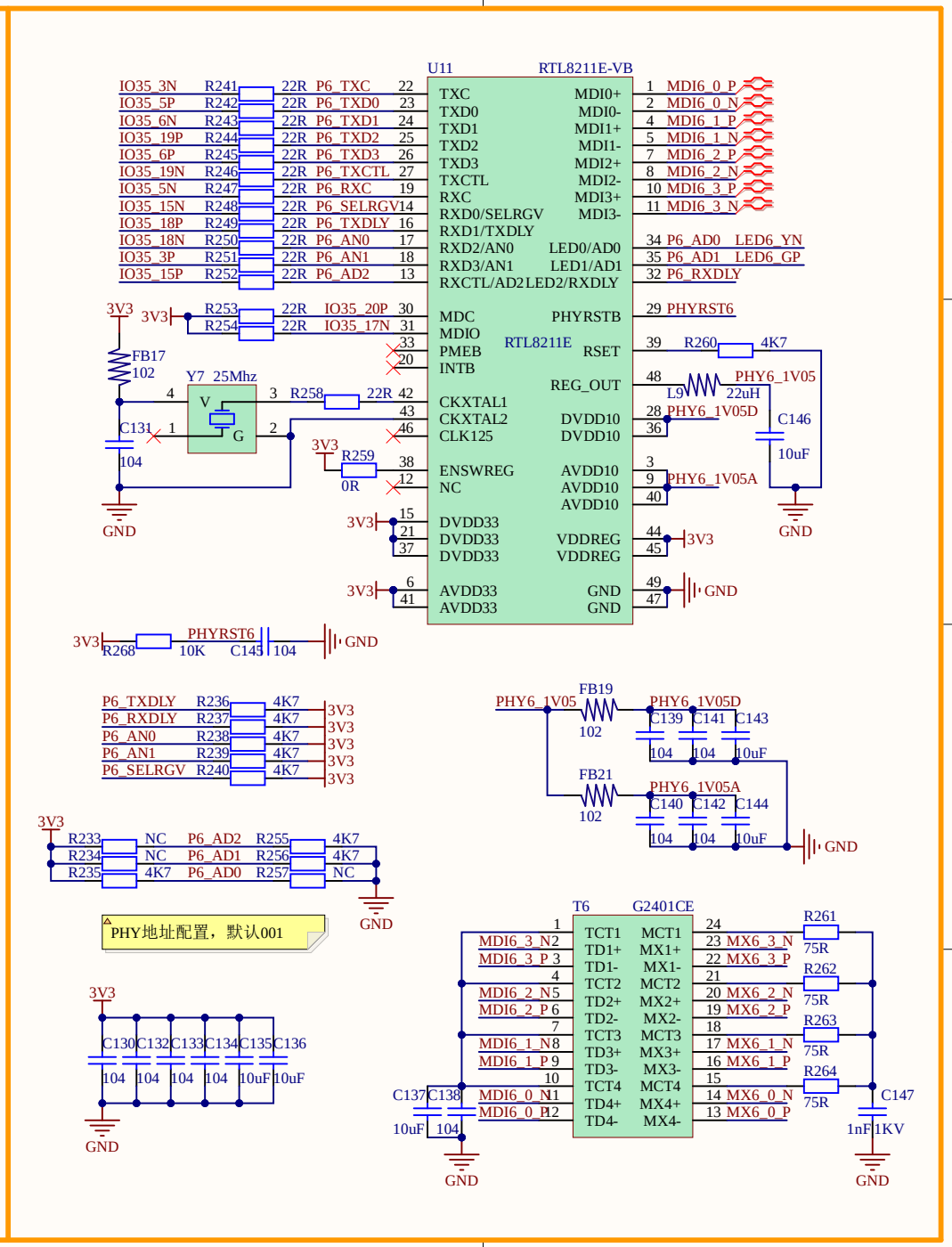
U11 RTL8211E-VB
IO35_3N R241 22R P6_TXC 22
IO35_5P R242 22R P6_TXD0 23
IO35_6N R243 22R P6_TXD1 24
IO35_19P R244 22R P6_TXD2 25
IO35_6P R245 22R P6_TXD3 26
IO35_19N R246 22R P6_TXCTL 27
IO35_5N R247 22R P6_RXC 19
IO35_15N R248 22R P6_SELRGV 14
IO35_18P R249 22R P6_TXDLY 16
IO35_18N R250 22R P6_AN0 17
IO35_3P R251 22R P6_AN1 18
IO35_15P R252 22R P6_AD2 13
3V3 R253 22R IO35_20P 30
R254 22R IO35_17N 31
FB17 102
Y7 25Mhz
C131 104
R258 22R
R259 0R
TXC
TXD0
TXD1
TXD2
TXD3
TXCTL
RXC
RXD0/SELRGV
RXD1/TXDLY
RXD2/AN0
RXD3/AN1
RXCTL/AD2
MDC
MDIO
PMEB
INTB
CKXTAL1
CKXTAL2
CLK125
ENSWREG
NC
DVDD33
AVDD33
MDI0+
MDI0-
MDI1+
MDI1-
MDI2+
MDI2-
MDI3+
MDI3-
LED0/AD0
LED1/AD1
LED2/RXDLY
PHYRSTB
RTL8211E
RSET
REG_OUT
DVDD10
AVDD10
VDDREG
GND
1 MDI6_0_P
2 MDI6_0_N
4 MDI6_1_P
5 MDI6_1_N
7 MDI6_2_P
8 MDI6_2_N
10 MDI6_3_P
11 MDI6_3_N
34 P6_AD0 LED6_YN
35 P6_AD1 LED6_GP
32 P6_RXDLY
29 PHYRST6
39 R260 4K7
48 L9 22uH PHY6_1V05
28 PHY6_1V05D
C146 10uF
9 PHY6_1V05A
44 45 3V3
49 47 GND
R268 10K PHYRST6 C145 104
P6_TXDLY R236 4K7 3V3
P6_RXDLY R237 4K7 3V3
P6_AN0 R238 4K7 3V3
P6_AN1 R239 4K7 3V3
P6_SELRGV R240 4K7 3V3
R233 NC P6_AD2 R255 4K7
R234 NC P6_AD1 R256 4K7
R235 4K7 P6_AD0 R257 NC
PHY6_1V05 FB19 102 PHY6_1V05D
C139 C141 C143 104 104 10uF
FB21 102 PHY6_1V05A
C140 C142 C144 104 104 10uF
PHY地址配置，默认001
C130 C132 C133 C134 C135 C136 104 104 104 104 10uF 10uF
T6 G2401CE
MDI6_3_N 2
MDI6_3_P 3
MDI6_2_N 5
MDI6_2_P 6
MDI6_1_N 8
MDI6_1_P 9
MDI6_0_N 11
MDI6_0_P 12
TCT1 TD1+ TD1- TCT2 TD2+ TD2- TCT3 TD3+ TD3- TCT4 TD4+ TD4-
MCT1 MX1+ MX1- MCT2 MX2+ MX2- MCT3 MX3+ MX3- MCT4 MX4+ MX4-
23 MX6_3_N
22 MX6_3_P
20 MX6_2_N
19 MX6_2_P
17 MX6_1_N
16 MX6_1_P
14 MX6_0_N
13 MX6_0_P
R261 75R
R262 75R
R263 75R
R264 75R
C137 C138 10uF 104
C147 1nF 1KV

Made on Earth by humans
USB
SW1
SW2
PS_SRST
RST_POR
BOOT
LED1
LED2
P2
DB1
DB2
J1
LiuLizhi
202212
OECU V0.1