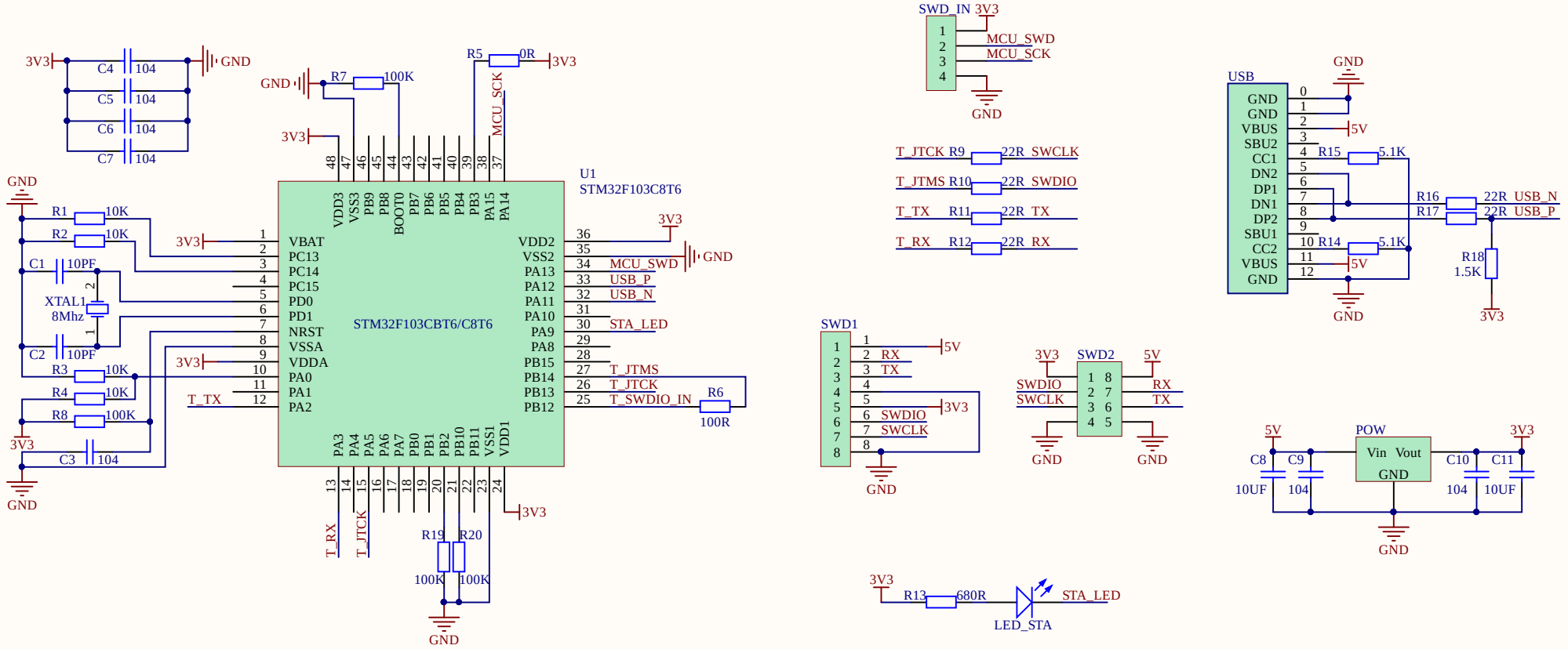

Title		
Size A4	Number	Revision
Date: 2021/2/14	Sheet of	
File: F:\My_Tech_Studio\..\st_linkv21_block1.SchDoc	Drawn By:	

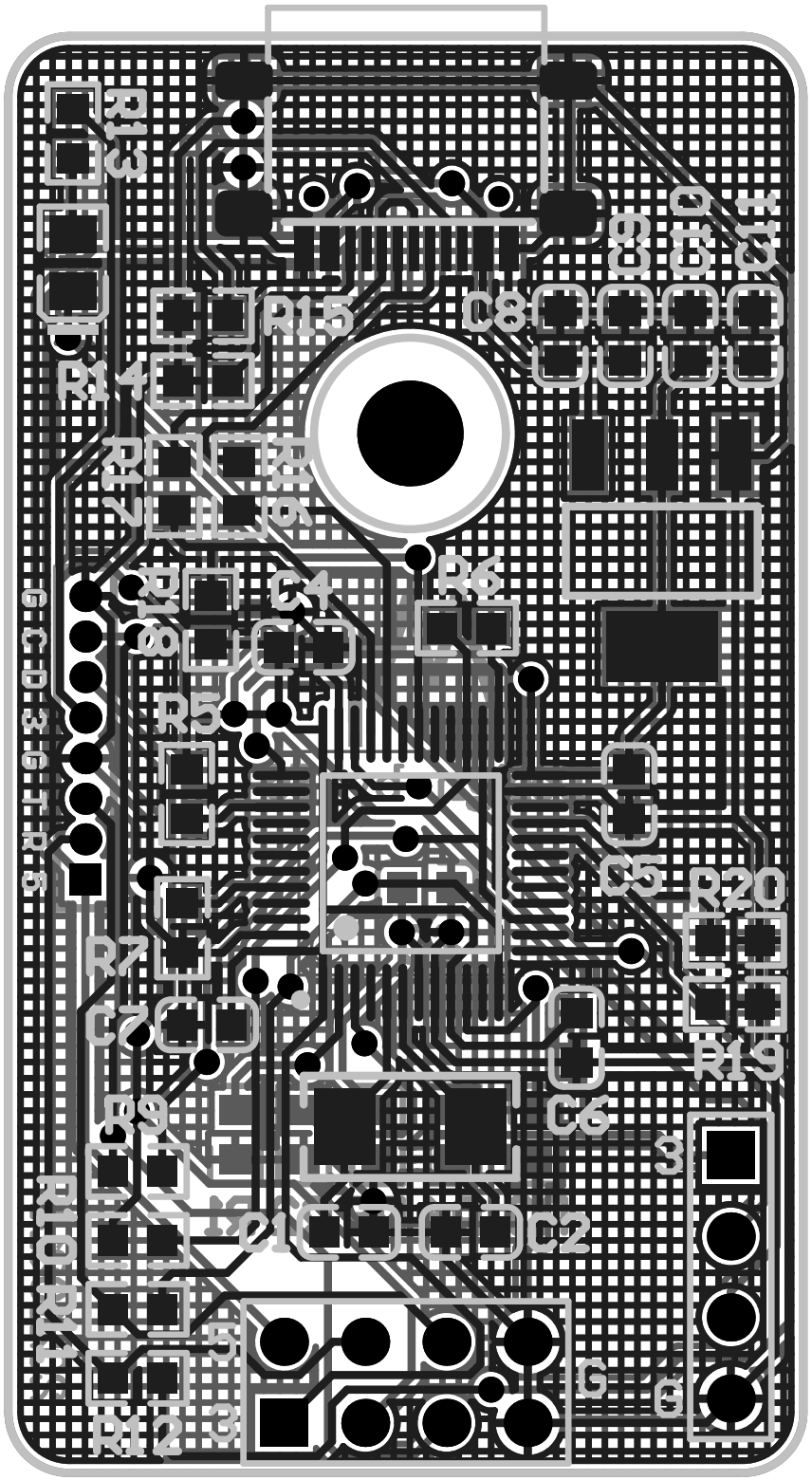
R13
R15
C8
R14
R6
C4
R5
C5
R20
R7
C7
R19
C6
R9
C1
C2
R10
R11
R12
G
G
3
5
3

Bill of Materials

Bill of Materials For Project [st_linkv21_block1.PrjPCB] (No PCB Document Selected)

Source Data From: st_linkv21_block1.PrjPCB
Project: st_linkv21_block1.PrjPCB
Variant: None

Creation Date: 2021/2/14 14:26:55
Print Date: 14-Feb-21 2:27:29 PM

Footprint	Comment	LibRef	Designator	Description	Quantity
0603_C	10PF	0603_CAP	C1, C2		2
0603_C	104	0603_CAP	C3, C4, C5, C6, C7, C9, C10		7
0603_C	10UF	0603_CAP	C8, C11		2
0805_LED	0805_LED	0805_LED	LED_STA		1
SOT223	AMS1117_3.3	AMS1117_3.3	POW		1
0603_R	10K	0603_RES	R1, R2, R3, R4		4
0603_R	0R	0603_RES	R5		1
0603_R	100R	0603_RES	R6		1
0603_R	100K	0603_RES	R7, R8, R19, R20		4
0603_R	22R	0603_RES	R9, R10, R11, R12, R16, R17		6
0603_R	680R	0603_RES	R13		1
0603_R	5.1K	0603_RES	R14, R15		2
0603_R	1.5K	0603_RES	R18		1
HDR1.27_8P	Header_1.27_8P	Header_1.27_8P	SWD1		1
HDR2_4P	Header_2.54_4p_2	Header_2.54_4p_2	SWD2		1
HDR1_4P	Header_2.54	Header_2.54_4P	SWD_IN		1
LQFP48	STM32F103C8T6	STM32F103C8T6	U1		1
USB_C_16PIN_SMT	USB_C_16P_SMT	USB_C_16P_SMT	USB		1
XTAL_5032_2	8Mhz	XTAL_8MHz_5032_2	XTAL1		1
					39

Approved

Notes