REVISION RECORD			
LTR	ECO NO:	APPROVED:	DATE:

map

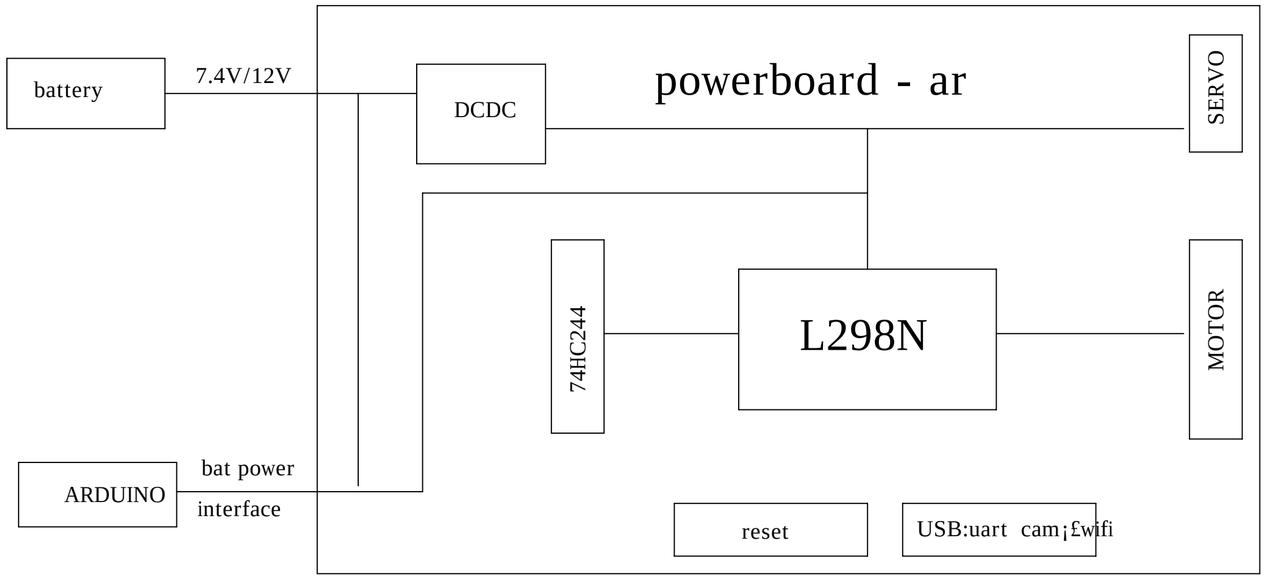

power tree

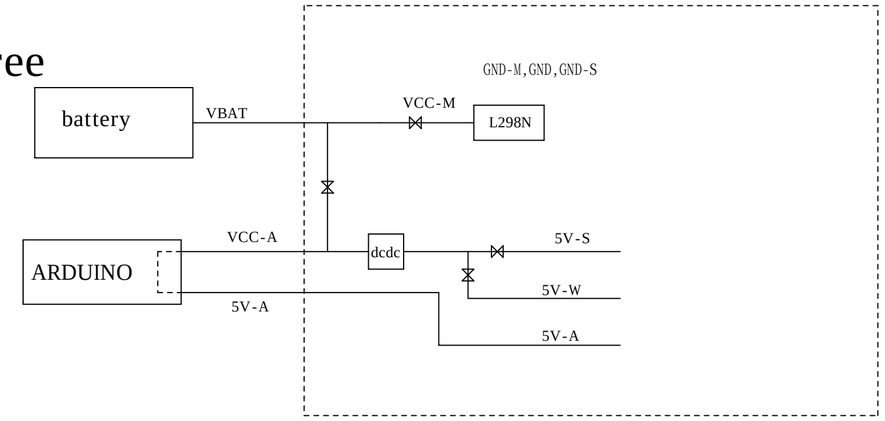

COMPANY: Shenzhen Xiao R Geek Technology Co.,Ltd				
TITLE: PWR.AR				
DRAWN: <Drawn By>	DATED: <Drawn Date>			
CHECKED: <Checked By>	DATED: <Checked Date>	CODE: <Code>	SIZE: C	DRAWING NO: <Drawing Number> REV: <Revision>
QUALITY CONTROL: <QC By>	DATED: <QC Date>			
RELEASED: <Released By>	DATED: <Release Date>	SCALE: <Scale>		SHEET: 1 OF 2

REVISION RECORD			
LTR	ECO NO:	APPROVED:	DATE:

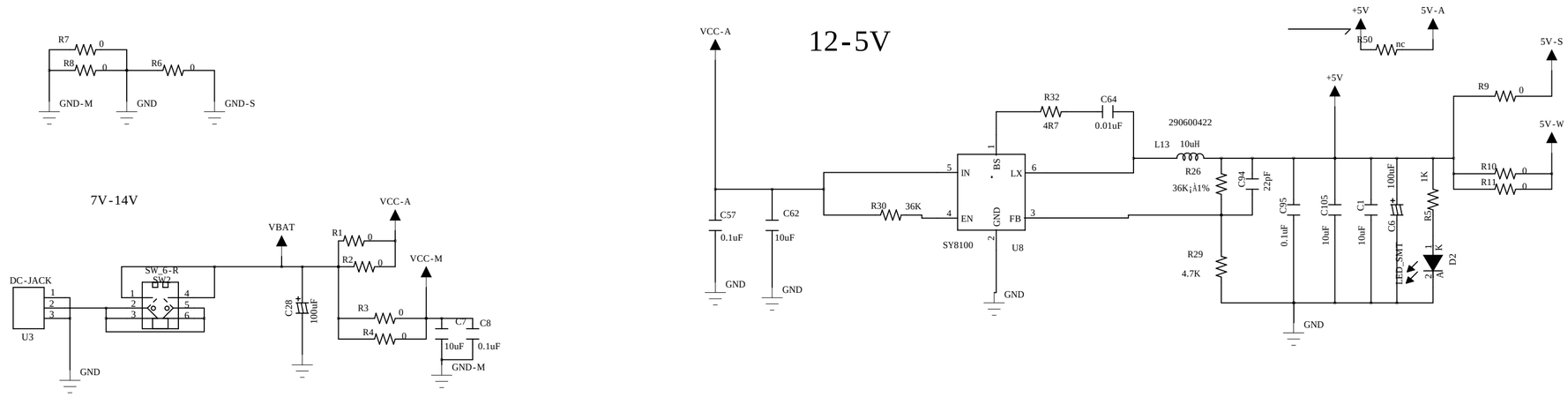

MOTOR DRIVER

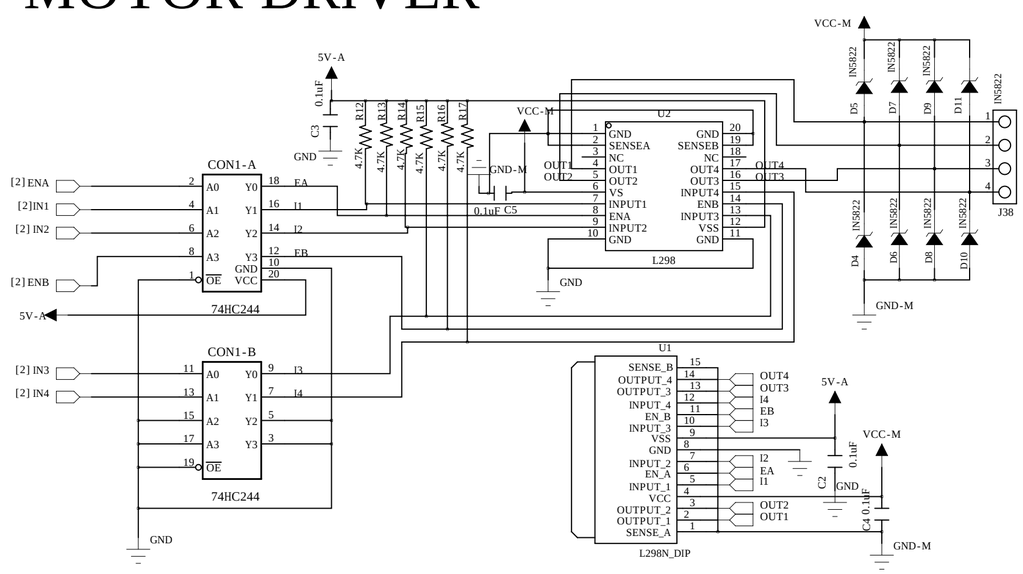

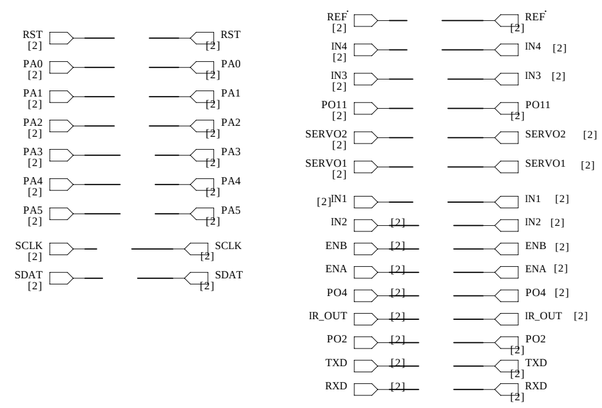

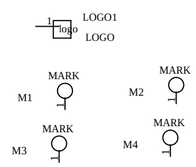

arduino interface

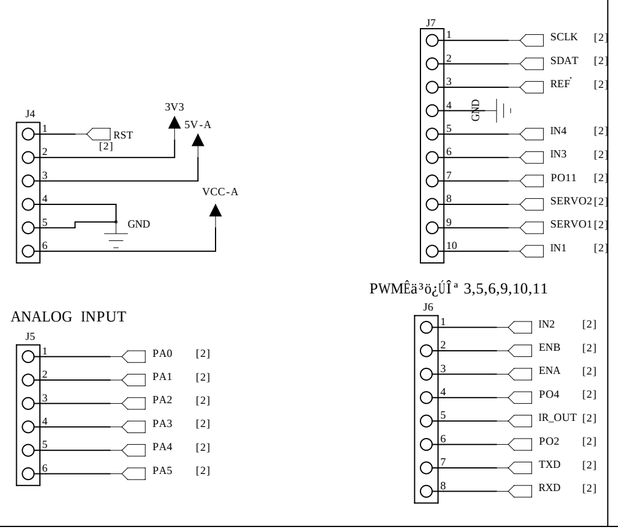

power interface

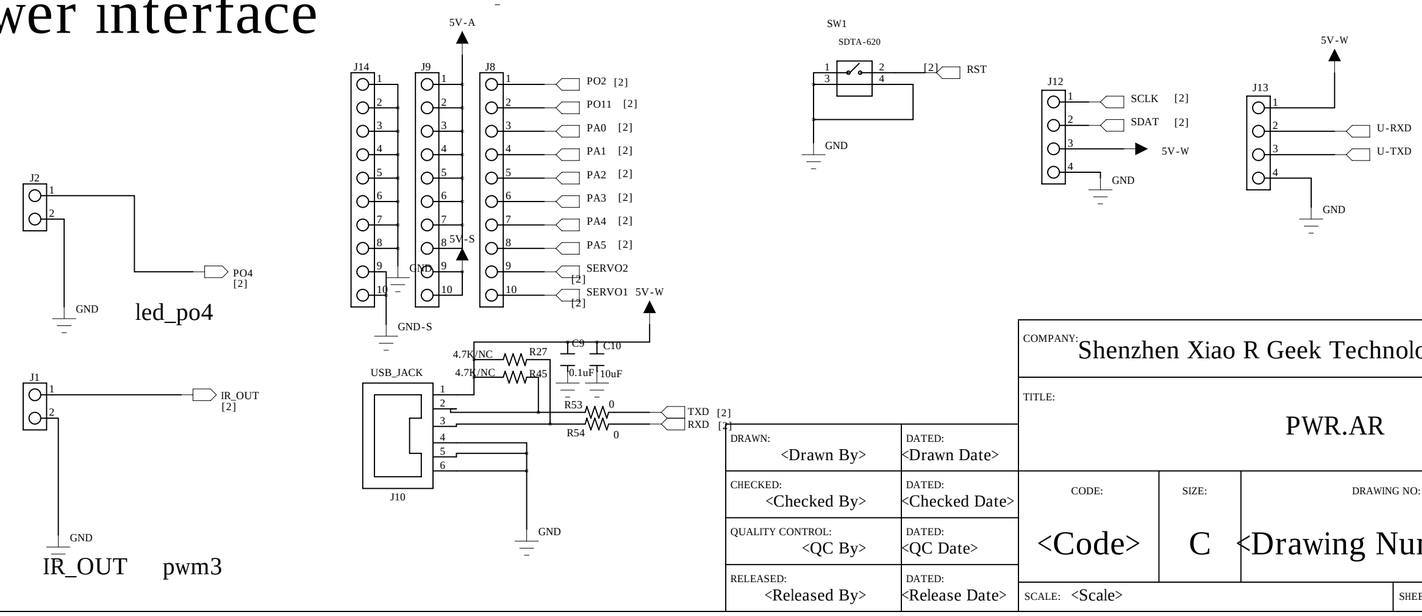

COMPANY: Shenzhen Xiao R Geek Technology Co.,Ltd			
TITLE: PWR.AR			
DRAWN: <Drawn By>	DATED: <Drawn Date>		
CHECKED: <Checked By>	DATED: <Checked Date>		
QUALITY CONTROL: <QC By>	DATED: <QC Date>		
RELEASED: <Released By>	DATED: <Release Date>		
CODE: <Code>	SIZE: C	DRAWING NO: <Drawing Number×Revision>	REV:
SCALE: <Scale>	SHEET: 2 OF 2		