J1 pin 1 ~WE pulled high in operation by 10K resistor R1 on ROM board.
J1 pin 2 A18 pulled high in operation by 10K resistor R8 on ROM board.
J1 pin 3 A17 pulled high in operation by 10K resistor R7 on ROM board.
J1 pin 4 A16 selects ROM to use, pulled high or low in operation by switch and 10K resistor R2 on ROM board.
J1 pin 5 A15 pulled high in operation by 10K resistor R5 on ROM board.
J1 pin 6 A14 pulled high in operation by 10K resistor R4 on ROM board.
J1 pin 7 A13 pulled high in operation by 10K resistor R3 on ROM board.
If connected with a wire link to address A13 on IF1 PCB allows use
of 16K ROM (Ian Collier).
J1 pin 8 CE pulled low in operation by 10K resistor R6 on ROM board.
J1 Pin 9 0V Allows pulling down of address lines by external switches.
Includes switching of A16 if internal switch set to position B.

To program.
1 – Erase EEPROM.
2 – To use default switched A16 load 1st ROM into programmer at 0x00000
3 – To use default switched A16 load 2nd ROM into programmer at 0x10000
without clearing previous ROM.
4 – Load other ROM's into programmer as required based on position of
external switches
A18 switches 0x40000 (SST39SF040 Only)
A17 switches 0x20000 (SST39SF020 and 040 Only)
A16 switches 0x10000 if internal switch set to position B.
A15 switches 0x08000
A14 switches 0x04000
A13 (DO NOT USE. Decoded by IF1 ULA)
A mix of switches is allowed and will increase the number of ROM positions
available, up to a maximum of 64.

5 – program."

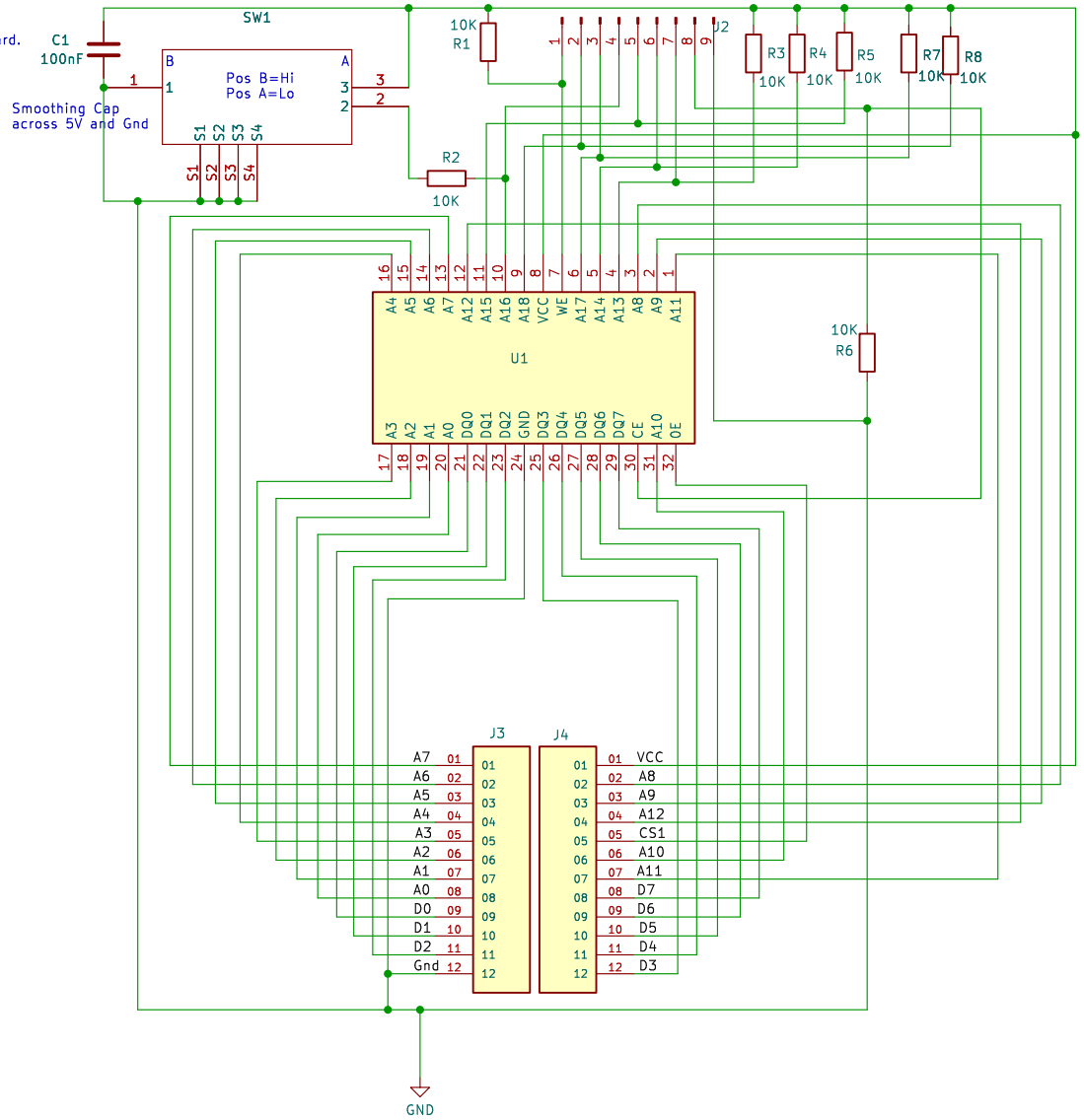


DO NOT EXTERNALLY SWITCH A13
Add 0V connection to J2 allowing external switching of A14/A15/A16/A17 and A18.

**Andy Potter**

Sheet: /
File: ZX Interface 1 ROM 39SF010.kicad_sch

**Title: ZX Interface 1 ROM Replacement SST39SF0x0**

| | | |
|---|---|---|
| Size: A4 | Date: 2023-11-22 | **Rev: 1.1** |
| KiCad E.D.A. kicad 7.0.8 | | Id: 1/1 |