POWER SOURCE (Current Flow Chart)

The chart below shows the route by which current flows from the battery to each electrical source (Fusible Link, Circuit Breaker, Fuse, etc.) and other parts.

The next page and following pages show the parts to which each electrical source outputs current.

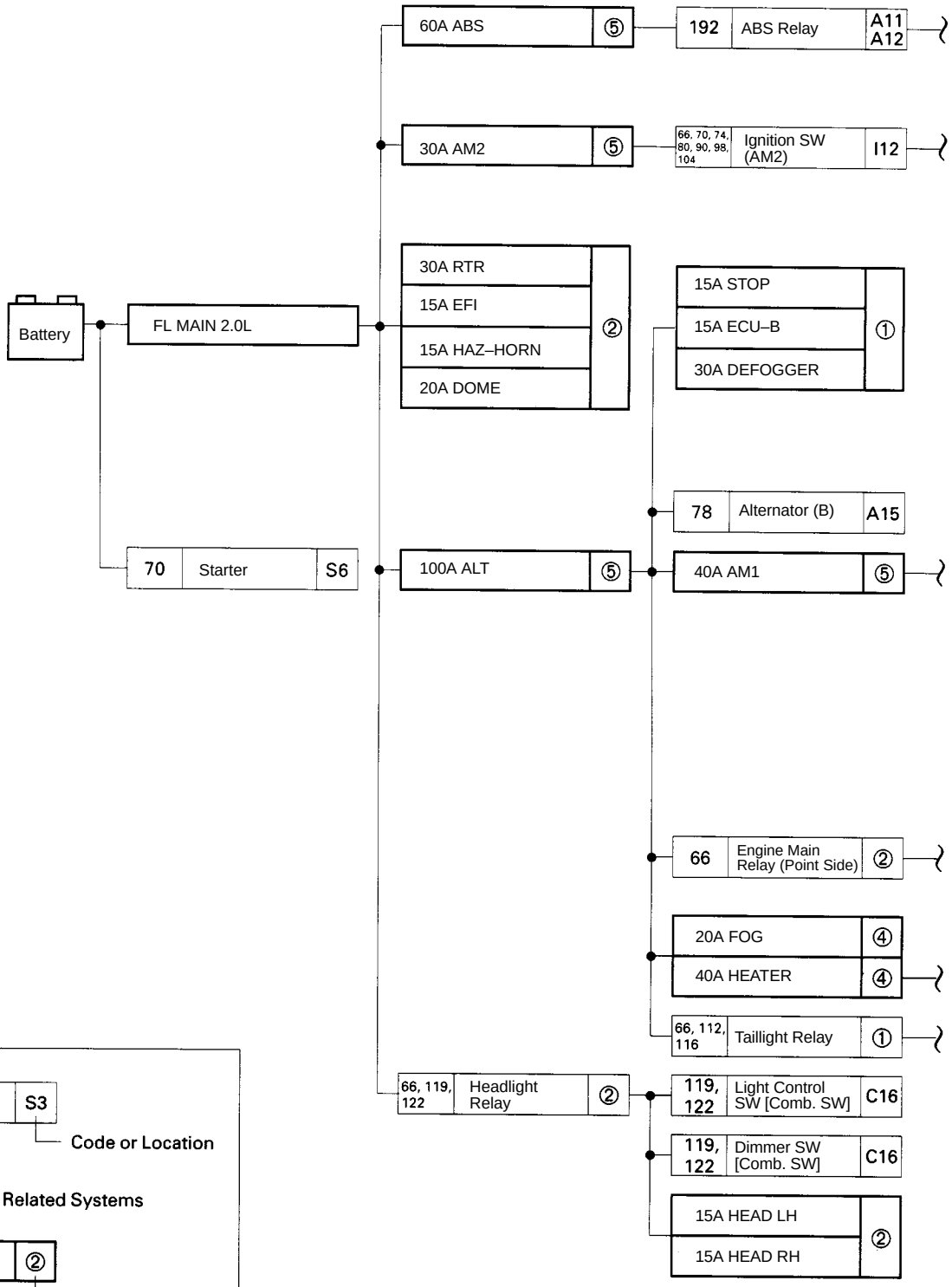

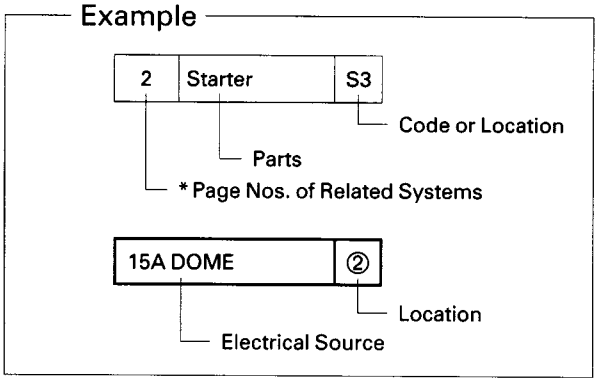

* These are the page numbers of the first page on which the related system is shown.
The part indicated is located somewhere in the system, not necessarily on the page indicated here.

[LOCATION] (1) : J/B No. 1 (See page 20) (2) : J/B No. 2 (See page 22) (3) : R/B No. 2 (See page 26)

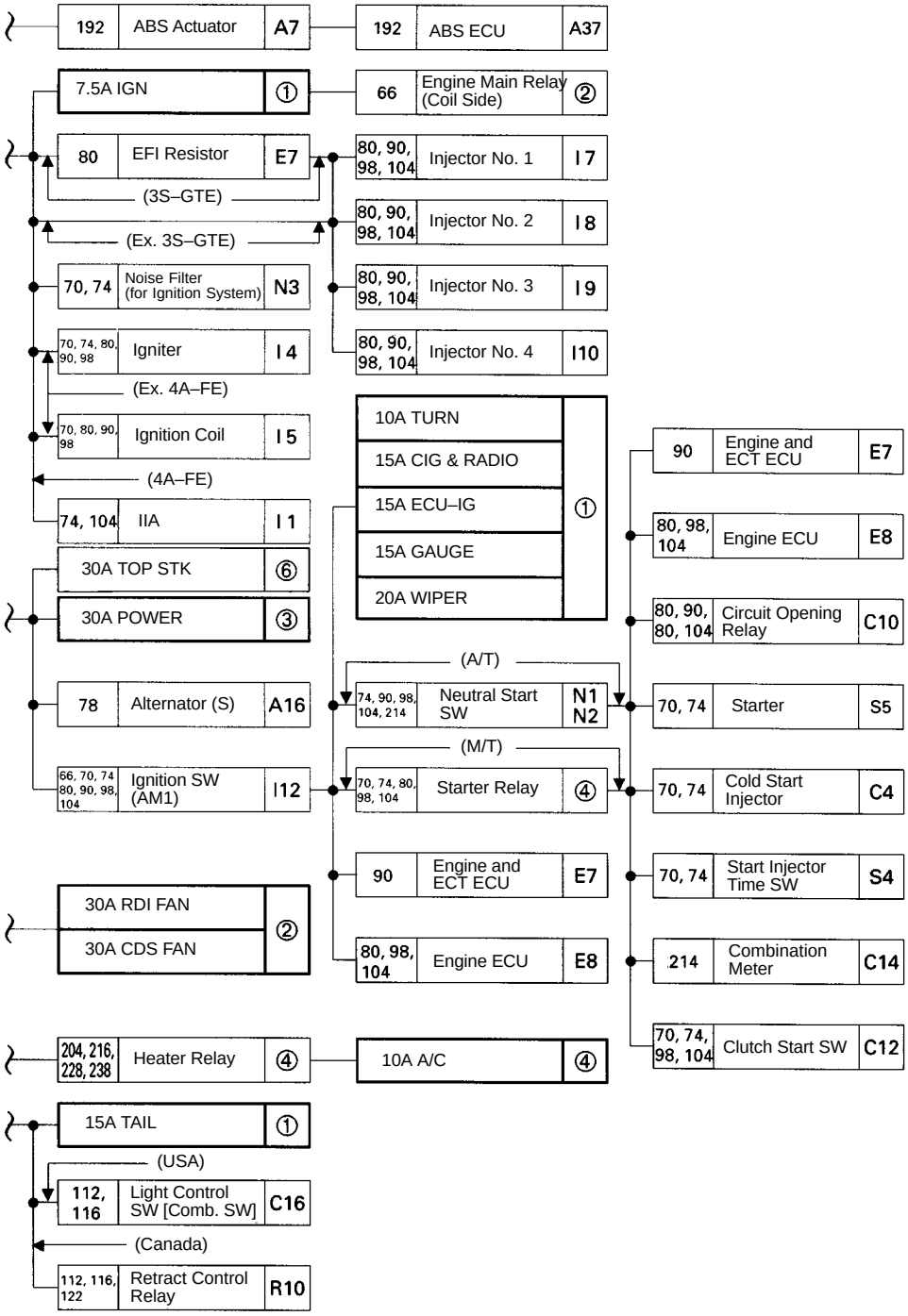

(4) : R/B No. 4 (See page 27) (2) : Fuse Box (F10 See on page 28) (3) : R/B No. 3 (See page 26)

POWER SOURCE (Current Flow Chart)

Location	Code or Location	CB or Fuse	A/C Condenser Fan Motor	A/C Idle–Up VSV	A/C Magnetic Clutch	A/C Pressure SW	ABS Actuator	ABS Relay	Alternator	A/C Amplifier	A/C Control Assembly		A/C Power Transistor	A/C System Amplifier	Air Vent Mode Control Servo Motor	Ashtray Illumination	Auto A/C Amplifier		Auto Tilt Away ECU	ABS ECU		Auto Antenna Control Relay and Motor	ABS Deceleration Sensor (All–Trac/4WD)
	*Page Nos. of Related Systems		218 230				192		78	118 230	112 230	112 218	218 230	218	218	218 230	112	218		176	192		206	192
			A2	A3	A4	A5	A7	A11	A16	A17	A18	A19	A20	A22	A25	A30	A31	A32	A34	A36	A37	A38	A41	A43
①	30A	DEFOGGER																						
①	20A	WIPER																						
①	15A	GAUGE		●	●	●	●	●		●		●	●		●	●		●	●	●	●	●		
①	7.5A	IGN				●			●															
①	15A	ECU–B																				●		
①	10A	TURN																						
①	15A	CIG & RADIO																●	●				●	
①	15A	TAIL									●	●					●							
①	15A	ECU–IG							●													●	●	●
①	15A	STOP																				●		
②	15A	HEAD LH																						
②	15A	HEAD RH																						
②	30A	RTR																						
②	15A	EFI																						
②	20A	DOME																	●				●	
②	15A	HAZ–HORN																						
②	30A	RDI FAN																						
②	30A	CDS FAN	●																					
③	30A	POWER																		●				
④	20A	FOG																						
④	10A	A/C		●		●				●		●												
④	40A	HEATER											●	●				●	●					

* These are the page numbers of the first page on which the related system is shown.
The part indicated is located somewhere in the system, not necessarily on the page indicated here.

[LOCATION] (1) : J/B No. 1 (See page 20) (2) : J/B No. 2 (See page 22) (3) R/B No. 2 (See page 26)

	Back–Up Light SW (M/T)	Blower Control Relay	Blower Motor	Blower Resistor		Back Door Control SW	Buckle SW LH (for Convertible)	Buckle SW RH (for Convertible)	Check Connector	Check Connector (for Fan Check)	Center Airbag Sensor Assembly	Cigarette Lighter	Cigarette Lighter Illumination	Circuit Opening Relay	Clock	Airbag Warning Light [Comb. Meter]	ABS Warning Light [Comb. Meter]	Check Engine Warning Light [Comb. Meter]	Combination Meter	Cruise Control Indicator Light [Comb. Meter]	ECT Indicator Light (PWR) [Comb. Meter]	High Beam Indicator Light [Comb. Meter]	O/D Off Indicator Light [Comb. Meter]	Seat Belt Warning Light [Comb. Meter]	Turn Signal Indicator Lights [Comb. Meter]	Charge Warning Light [Comb. Meter]	Combination Meter (Illumination)	Door Warning Light [Comb. Meter]	Dimmer SW [Comb. SW]
	132	218 230	218 230	218 230	218 230	136	158		80 90 78 104 197	218 230	197	203	112	80 90 98 104	203	145 214	192	80 90 98 104	214	180 186	169	119 122	169 174	155	134	78 214	112 214	136	119 122 128
	B1	B3	B4	B5	B6	B7	B10	B11	C1	C2	C7	C8	C9	C10	C11	C13	C14									C15			C16
	●	●							●								●	●	●	●	●		●	●					
											●															●			
									●	●	●					●													
																									●				
											●	●			●														
													●		●												●		
											●																		
																						●							●
																						●							●
									●					●															
						●									●													●	
																									●				
		●	●	●	●																								

(4) : R/B No. 4 (See page 27)

POWER SOURCE (Current Flow Chart)

Location	CB or Fuse		Horn SW [Comb. SW]	Light Control SW [Comb. SW]	Turn Signal SW [Comb. SW]	Front Wiper and Washer SW [Comb. SW]	Rear Wiper and Washer SW [Comb. SW]	Cruise Control ECU (Motor)	Cruise Control ECU (Vacuum)	Cruise Control ECU	Defogger SW	Diode (for O/D System)	Diode (for Key Off)	Door Lock ECU	Diode (for Interior System)	Door Courtesy Light LH	Door Courtesy Light RH	Door Courtesy SW LH	Door Courtesy SW RH	Door Lock Motor LH	Door Lock Motor RH	Diode (for Daytime Running Light System)	ECT Pattern Select SW	Engine ECU
	*Page Nos. of Related Systems		191	119 122 128	134	152	150	180	186	180	112 160	174	140 162 166	140 145	136 158	136				145		122	122 169	104 218 230
	CB or Fuse		C16			C17		C19		C20	D2	D3	D5	D6	D7	D8	D9	D10	D11	D14	D15	D18	E4	E5
①	30A	DEFOGGER																						
	20A	WIPER				●	●																	
	15A	GAUGE							●	●	●	●	●	●									●	●
	7.5A	IGN																						
	15A	ECU–B																						
	10A	TURN			●																			
	15A	CIG & RADIO																					●	
	15A	TAIL		●							●											●	●	
	15A	ECU–IG						●	●						●									
	15A	STOP						●	●															
②	15A	HEAD LH																						
	15A	HEAD RH																						
	30A	RTR																						
	15A	EFI																						●
	20A	DOME													●	●	●	●	●					
	15A	HAZ–HORN	●																					
	30A	RDI FAN																						
	30A	CDS FAN																						
③	30A	POWER												●						●	●			
④	20A	FOG																						
	10A	A/C																						
	40A	HEATER																						

* These are the page numbers of the first page on which the related system is shown.
The part indicated is located somewhere in the system, not necessarily on the page indicated here.

[LOCATION] (1) : J/B No. 1 (See page 20) (2) : J/B No. 2 (See page 22) (3) R/B No. 2 (See page 26)

90	80 98	98 218 230	90 169	80 98 104	218	122 128		116		116 134		152	112 128	80 90 98 104 214	80		214	112		119 122 128		191		112 134	130	80 90 96 169	136	
Engine and ECT ECU	Engine ECU	Engine ECU	Engine and ECT ECU	Engine ECU	Extra High Speed Relay	Fog Light LH	Fog Light RH	Front Side Marker Light LH	Front Side Marker Light RH	Front Turn Signal Light and Clearance Light LH	Front Turn Signal Light and Clearance Light RH	Front Wiper Motor	Fog Light SW	Fuel Pump and Fuel Sender	Fuel Pump Resistor	Fuel Pump	Fuel Sender (All–Trac/4WD)	Glove Box Light	Glove Box Light SW	Headlight LH	Headlight RH	Horn LH	Horn RH	Hazard SW	High Mount Stop Light	ISC Valve	Ignition Key Cylinder Light	Interior Light
E6		E7	E8		E9	F1	F2	F5	F6	F7	F8	F9	F11	F16	F17	F18	F19	G1	G2	H1	H2	H3	H4	H5	H6	I3	I11	I13
												●																
		●	●	●	●												●											
				●																								
										●	●													●				
		●		●				●	●	●	●		●					●	●					●				
		●		●																					●			
													●							●	●							
													●							●	●							
●	●	●	●	●										●	●	●										●		
																											●	●
										●	●											●	●	●				
						●	●																					
					●																							

(4) : R/B No. 4 (See page 27)

POWER SOURCE (Current Flow Chart)

Location	CB or Fuse	Parts / Code or Location	Licence Plate Light	Luggage Compartment Door Courtesy SW (C/P)	Luggage Compartment Light (C/P)	Luggage Compartment Light (L/B)	Back–Up Light SW (w/o ECT of A/T)	Neutral Start SW and Back–Up Light SW (w/ ECT of A/T)	Noise Filter (for Defogger System)	O/D Solenoid	Oil Pressure SW	Oxygen Sensor (for Ex. California)	O/D Main SW	Oxygen Sensor (All–Trac/4WD)	Power Seat Motor (for Lumber Support)	Power Seat Motor (for Side Support)	Power Seat SW	Power Window Master SW	Power Window Motor LH	Power Window Motor RH	Power Window SW RH	Panel Relay (for Daytime Running Light System)	Quarter Power window SW	Quarter Power Window Motor LH
		*Page Nos. of Related Systems	116	136	136	136	132	132 169	160	104	214	104	112 169 174	80	162			140				112	138	
			L1	L2	L3	L4	N1	N2	N4	O1	O2	O6	O7	O8	P2	P3	P4	P5	P6	P7	P8	P9	Q1	Q2
①	30A	DEFOGGER							●															
	20A	WIPER																						
	15A	GAUGE					●	●		●	●		●											
	7.5A	IGN																						
	15A	ECU–B																						
	10A	TURN																						
	15A	CIG & RADIO																						
	15A	TAIL	●										●									●		
	15A	ECU–IG																						
	15A	STOP																						
②	15A	HEAD LH																						
	15A	HEAD RH																						
	30A	RTR																						
	15A	EFI										●		●										
	20A	DOME		●	●	●																		
	15A	HAZ–HORN																						
	30A	RDI FAN																						
	30A	CDS FAN																						
③	30A	POWER													●	●	●	●	●	●	●			
④	20A	FOG																						
	10A	A/C																						
	40A	HEATER						●																

* These are the page numbers of the first page on which the related system is shown.
The part indicated is located somewhere in the system, not necessarily on the page indicated here.

[LOCATION] (1) : J/B No. 1 (See page 20) (2) : J/B No. 2 (See page 22) (6) R/B No. 2 (See page 26)

	Q3	R1	R2	R3	R4	R5	R6	R7	R8	R9	R10	R11	R12				R13				R20	R21	R24	R25	R26	S1	S7	S8	S9
	138	218 230	119 122		218 230	112	112 212	206	164	119 122	122	112	122	124	130	116	122	128	130	116	160		150	164		180 186	178	206 208	208
Quarter Power Window Motor RH																					●	●							
Radiator Fan Motor																							●						
Retract Motor LH					●								●				●												
Retract Motor RH																													
RECIRC/FRESH Control Servo Motor																													
Radio and Player (w/ CD Player)														●				●											
Radio and Player (w/o CD Player)							●	●	●															●	●		●	●	●
Remote Control Mirror SW						●	●					●				●				●									
Retract Control Relay											●															●	●		
Retract Control Relay (for CANADA)															●				●								●		
Rheostat											●																		
Back–Up Light LH [Rear Comb. Light LH]											●																		
Rear Turn Signal Light LH [Rear Comb. Light LH]																													
Stop Light LH [Rear Comb. Light LH]																													
Tail and Rear Side Marker Light LH [Rear Comb. Light LH]																													
Back–Up Light RH [Rear Comb. Light RH]																													
Rear Turn Signal Light RH [Rear Comb. Light RH]																													
Stop Light RH [Rear Comb. Light RH]																													
Tail and Rear Side Marker Light RH [Rear Comb. Light RH]																													
Rear Window Defogger																													
Rear Wiper Motor and Relay																													
Remote Control Mirror LH																													
Remote Control Mirror RH																													
Speed Sensor (for Cruise Control System)																													
Shift Lock ECU																													
Stereo Component Amplifier (w/ CD Player)																													

(4) : R/B No. 4 (See page 27)

POWER SOURCE (Current Flow Chart)

Location	CB or Fuse	Parts	Stop Light SW	Sun Roof Control Relay	Personal Light [Sunroof SW]	Sun Roof Motor	Seat Belt Solenoid (Driver's)	Seat Belt Solenoid (Passenger's)	Turn Signal Flasher	Turbo Charging Pressure Sensor	VSV (for EGR System)	VSV (for Electrical Idle–Up System)	VSV (for Turbo Charging Pressure)	VSV (for T–VIS)	Water Motor	Water Temp. SW (for O/D System)	Water Temp. Sender	Water Temp. SW (for Fans Control)	Defogger Relay	Diode	Integration Relay	EFI Main Relay	Radiator Fan Relay No. 1	Power Main Relay
		*Page Nos. of Related Systems	80 90 130 169 178 180 186	166	136	166	158		134	214	80 90 98 104	104	80	80	150 152	174	214	218 230	160	80 90 98	136 138 155	80 90 98 104 169	218 230	140 162 164
		Code or Location	S10	S11	S12	S14	S15	S16	T2	T3	V1	V2	V4	V5	W1	W2	W3	W4	①			②		③
①	30A	DEFOGGER																	●					
①	20A	WIPER													●									
①	15A	GAUGE								●						●	●		●		●			●
①	7.5A	IGN																●				●	●	
①	15A	ECU–B																						
①	10A	TURN							●												●			
①	15A	CIG & RADIO																			●			
①	15A	TAIL																		●	●			
①	15A	ECU–IG																						
①	15A	STOP	●																					
②	15A	HEAD LH																						
②	15A	HEAD RH																						
②	30A	RTR																						
②	15A	EFI									●	●	●	●								●		
②	20A	DOME			●																●			
②	15A	HAZ–HORN							●															
②	30A	RDI FAN																					●	
②	30A	CDS FAN																						
③	30A	POWER		●		●																		●
④	20A	FOG																						
④	10A	A/C																						
④	40A	HEATER																						

* These are the page numbers of the first page on which the related system is shown.
The part indicated is located somewhere in the system, not necessarily on the page indicated here.

[LOCATION] (1) : J/B No. 1 (See page 20) (2) : J/B No. 2 (See page 22) (3) : R/B No. 2 (See page 26)
(4) : R/B No. 4 (See page 27) (6) : R/B No. 3 (See page 26) (7) : R/B No. 5 (See page 27)

●																			●			④	Heater Relay	218 230
		●								●	●											⑥	Fog Light Relay	122 128
				●														●				⑦	A/C Condenser Fan Relay No. 2	218 230
				●															●				A/C Condenser Fan Relay No. 3	
																			●				A/C Magnetic Clutch Relay	
						●																	Horn Relay	191
								●															Fuel Pump Control Relay	80

-Memo-