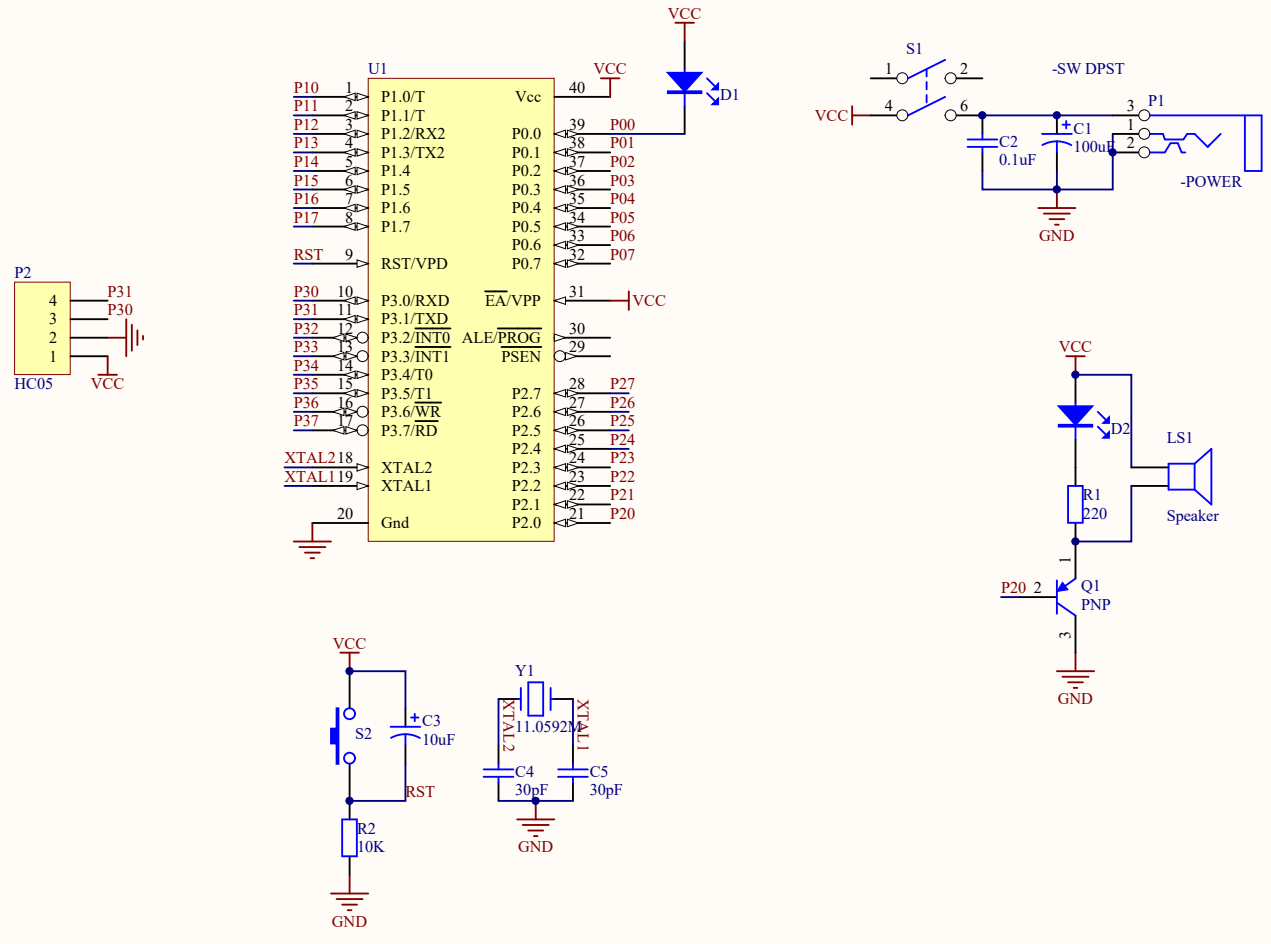

Title		
Size A4	Number	Revision
Date: 2017/3/7		Sheet of
File: D:\ \..\ .SchDoc		Drawn By:

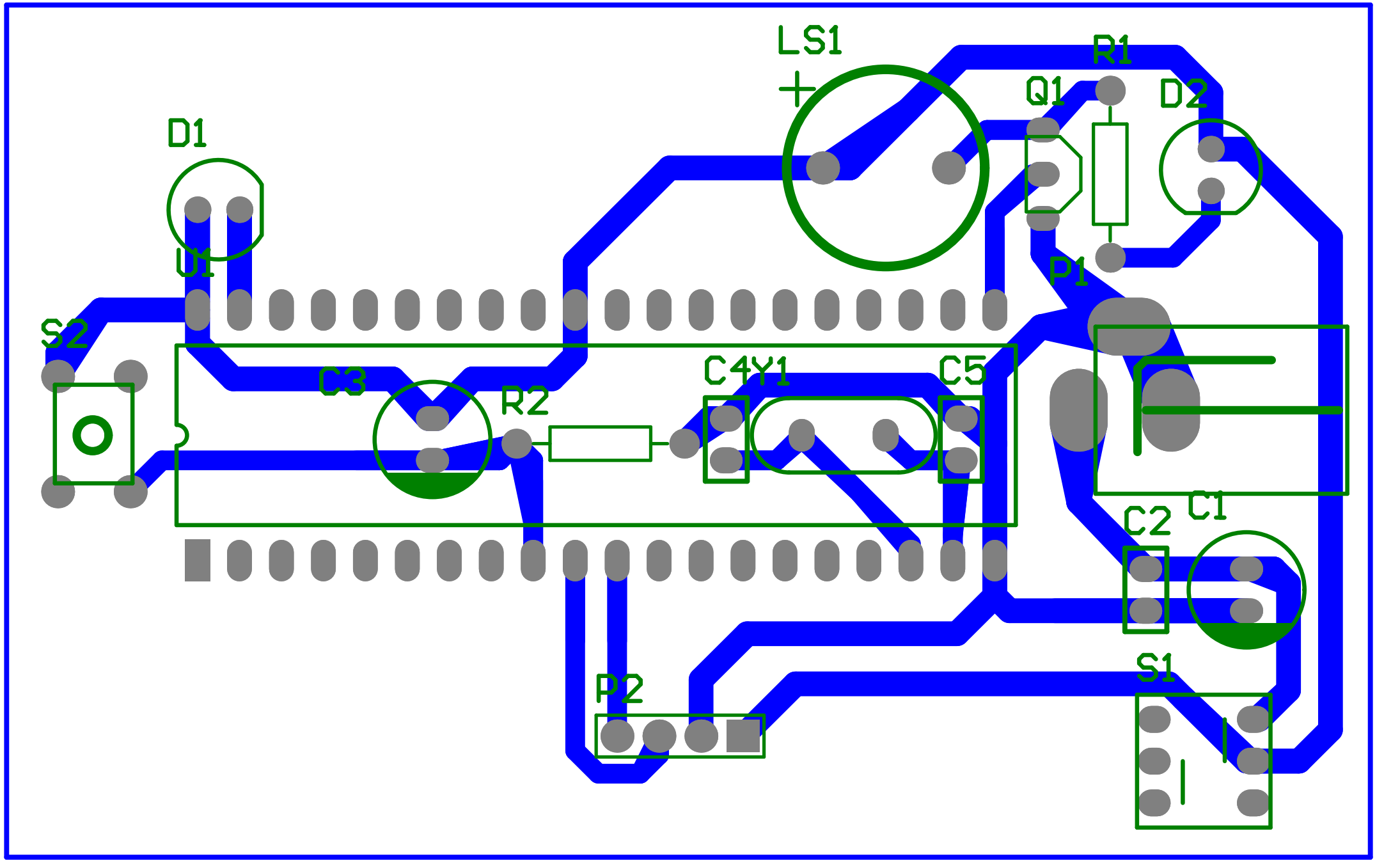
LS1
R1
Q1
D2
D1
U1
P1
S2
C3
R2
C4
Y1
C5
C2
C1
P2
S1