Technical Drawing Pan-Tilt Gimbal

Project: Autonomous Tracking Gimbal
Date: April 2026

1. Final Product Design

The final iteration utilizes a 3-legged base with integrated housing for the Dynamixel actuators for stability and aesthetics.

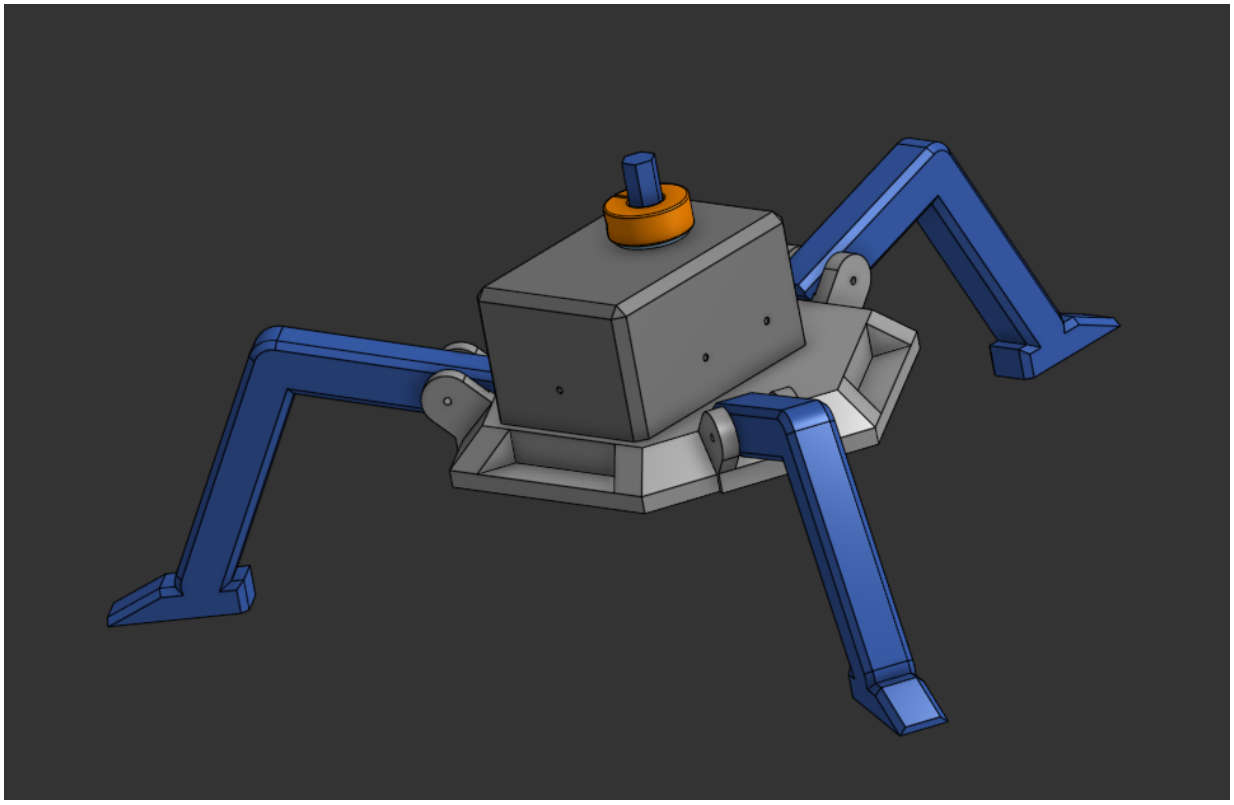

Figure 1: Isometric View without yaw axis portion

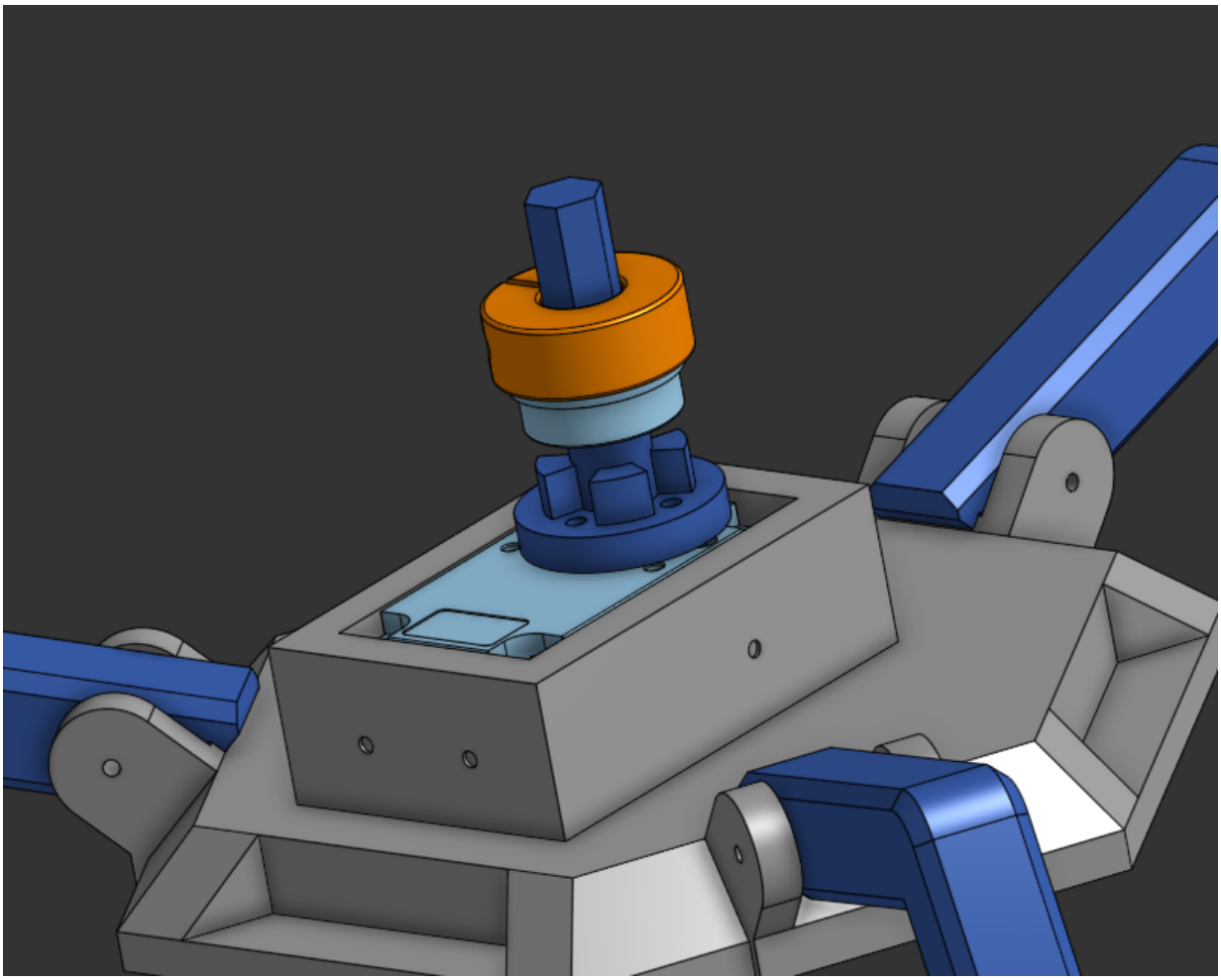

Figure 2: Internal Axis: Housed Actuator Assembly

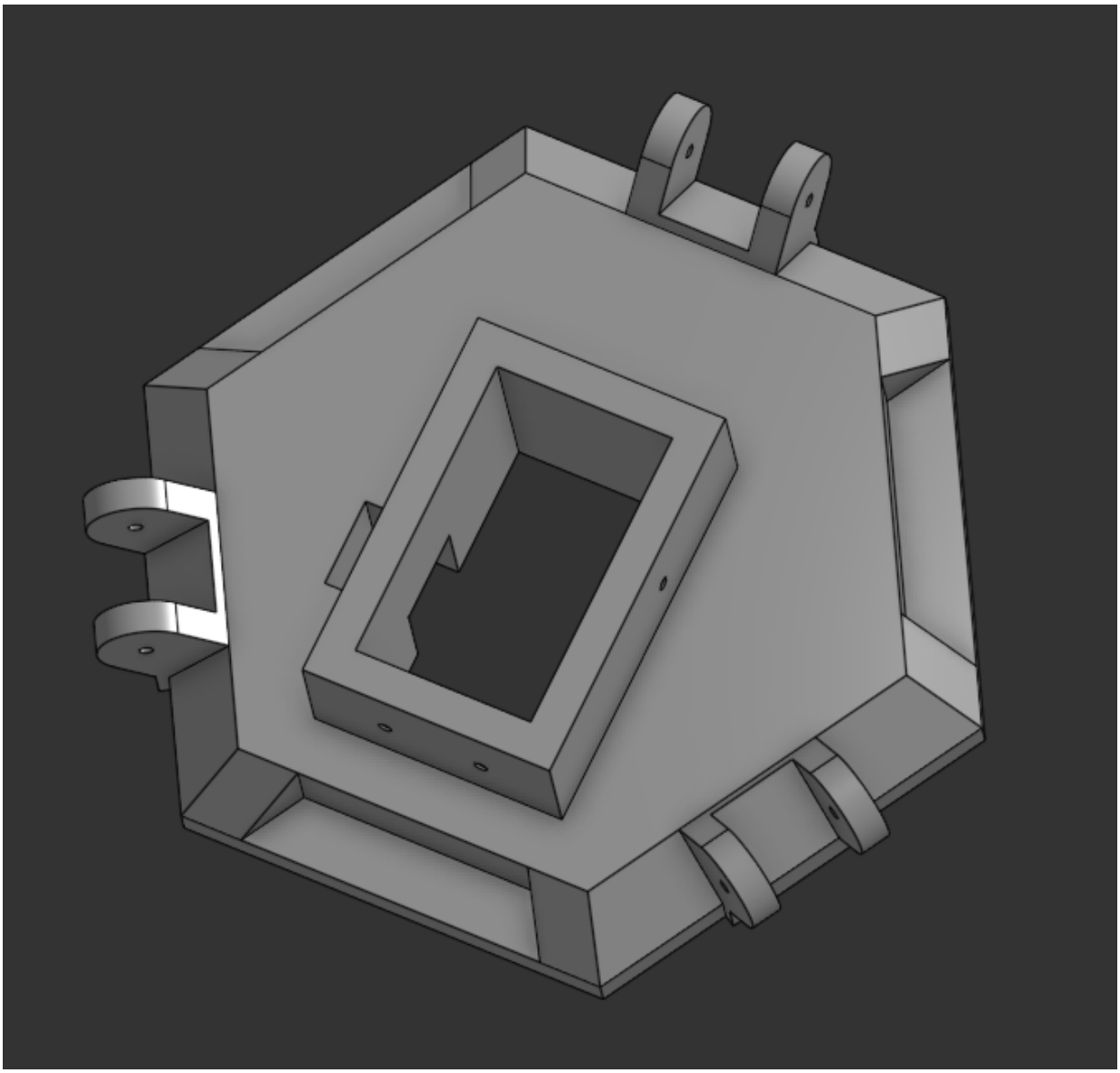

Figure 3: Main Chassis Plate: Leg Attachment Geometry

2. Original Prototype

Initial proof-of-concept iteration focusing on component spacing, axis alignment, and basic structural stability.

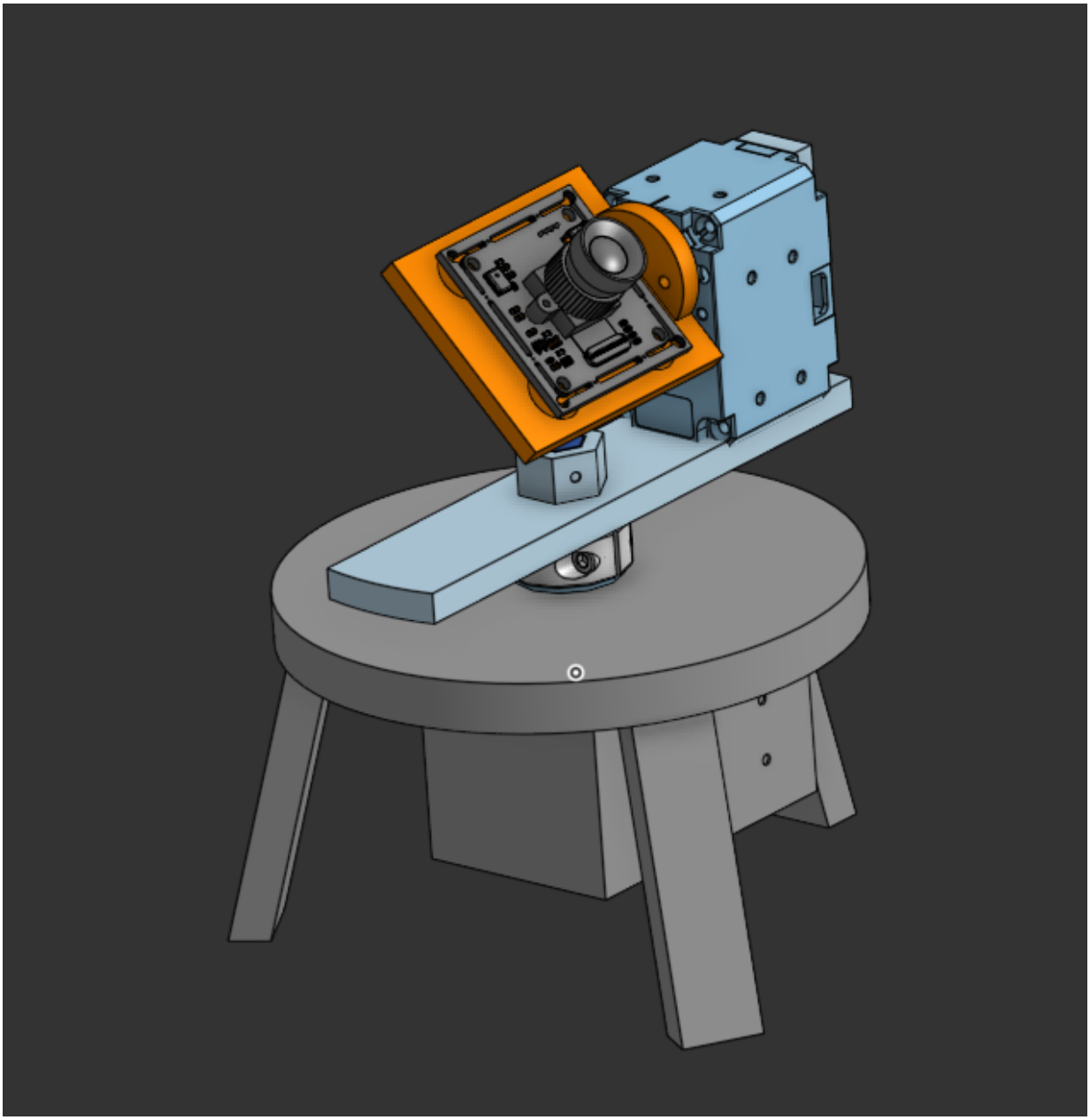

Figure 4: Prototype Assembly: Initial Prototype Layout

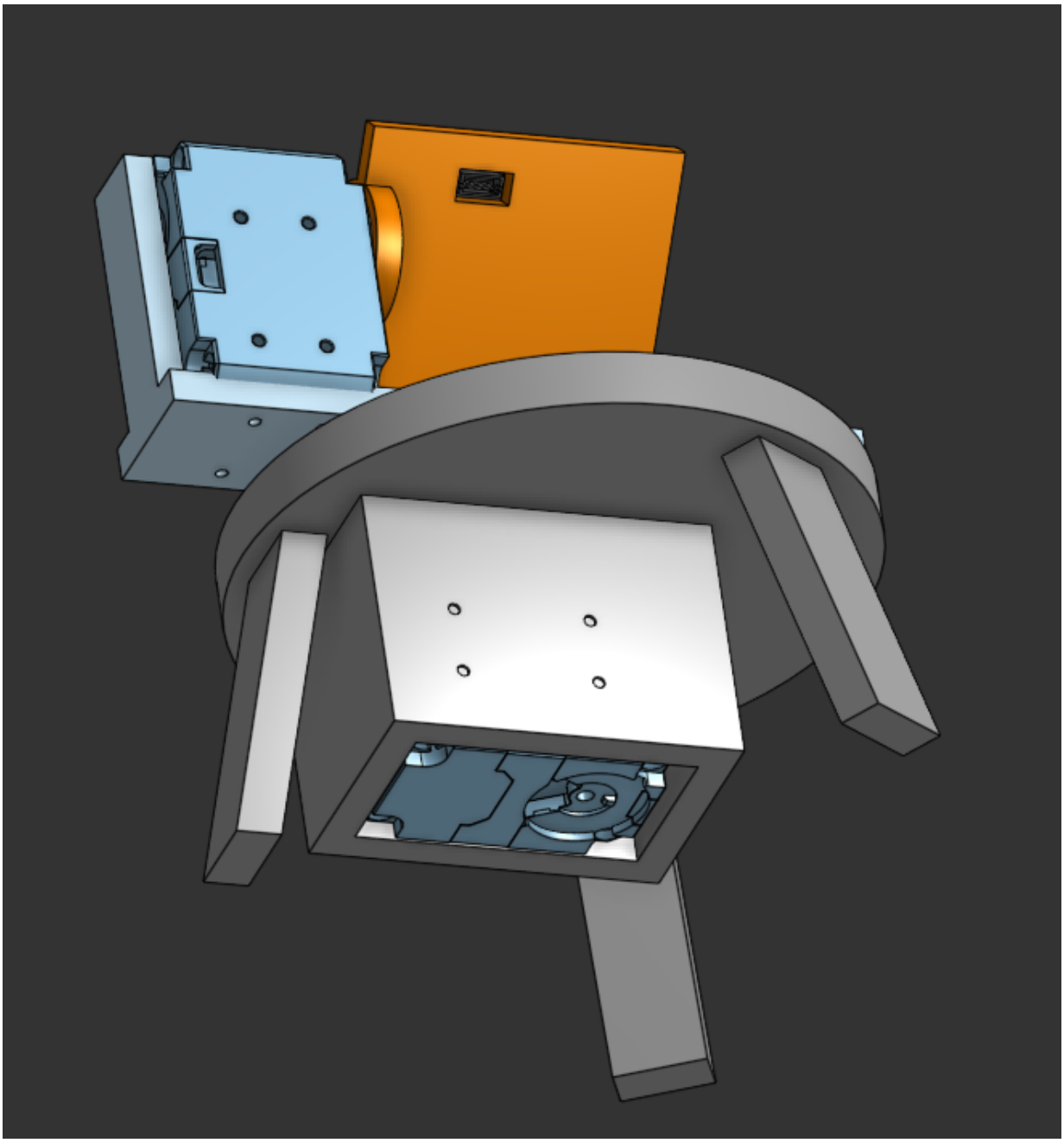

Figure 5: Bottom View: Prototype Motor Mounting and Internal Housing

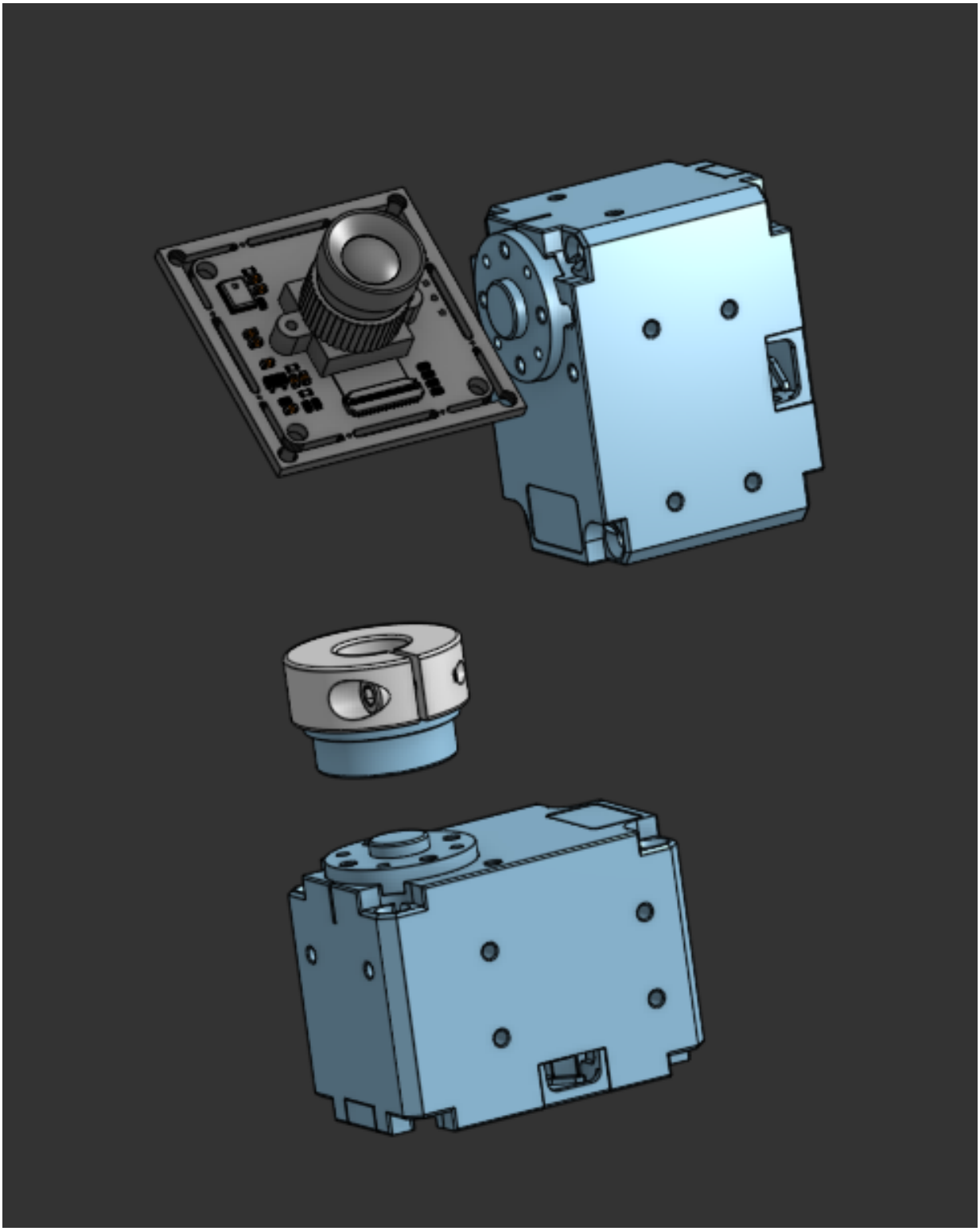

Figure 6: Exploded View: All Reference Geometry Stack (Front)

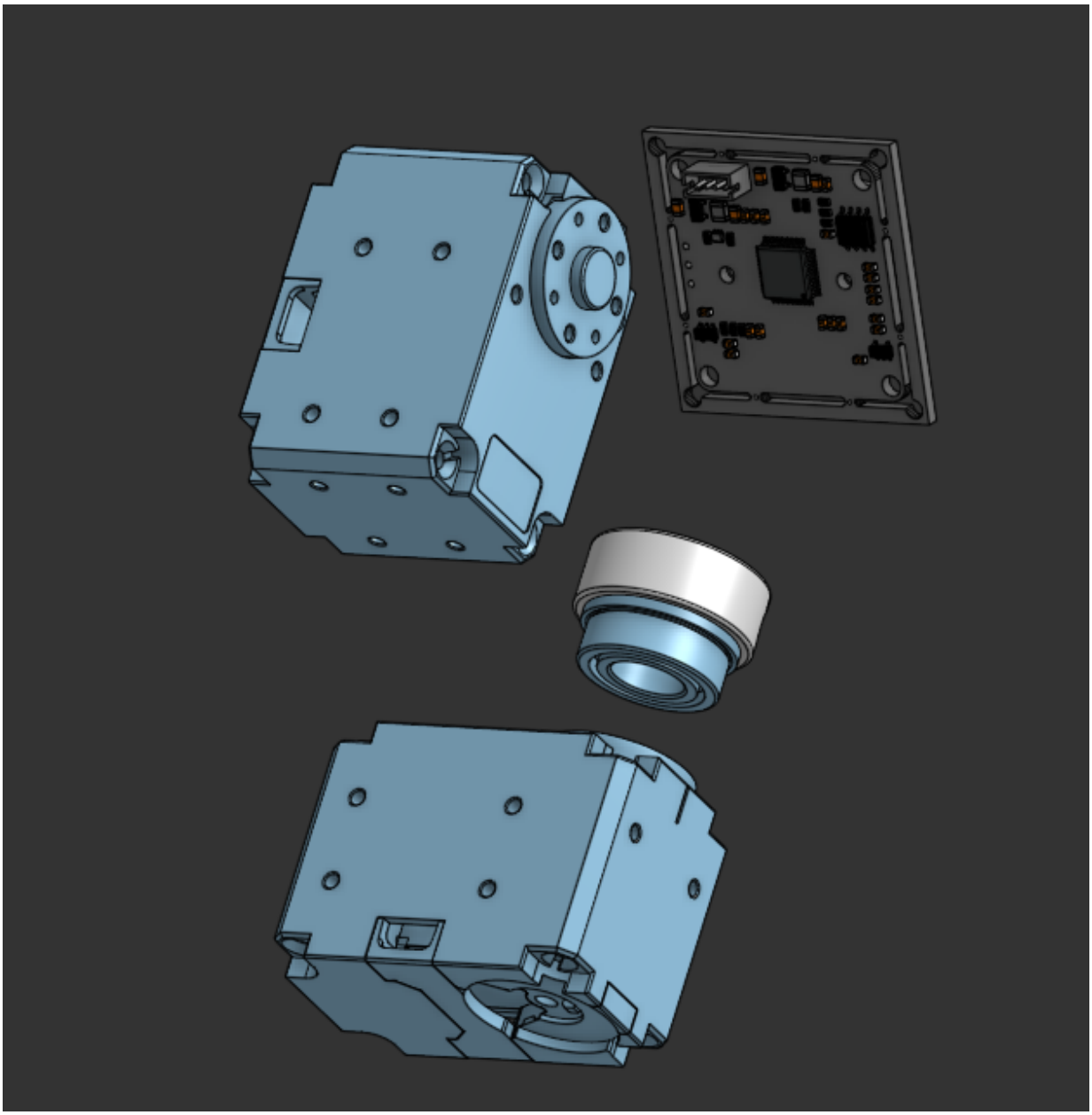

Figure 7: Exploded View: All Reference Geometry Stack (Rear)

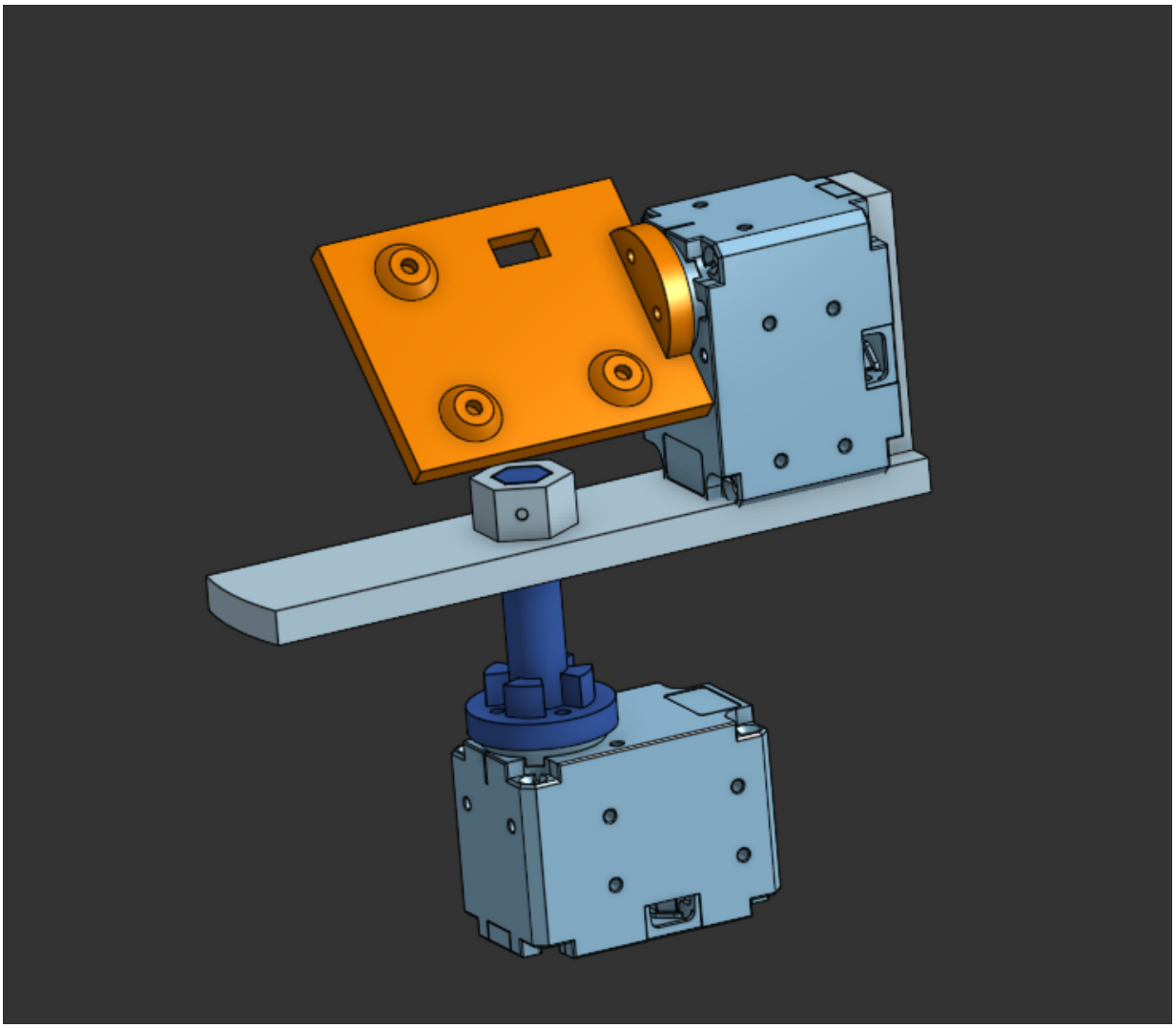

Figure 8: Axial Assembly: Component Alignment