Solid Mechanics

Chapter 5

Wonyoung Lee

School of Mechanical Engineering
Sungkyunkwan University

Chap 5. Torsion

- Elastic deformation
- Statically indeterminate systems
- Thermal stress

Torsion on a circular shaft

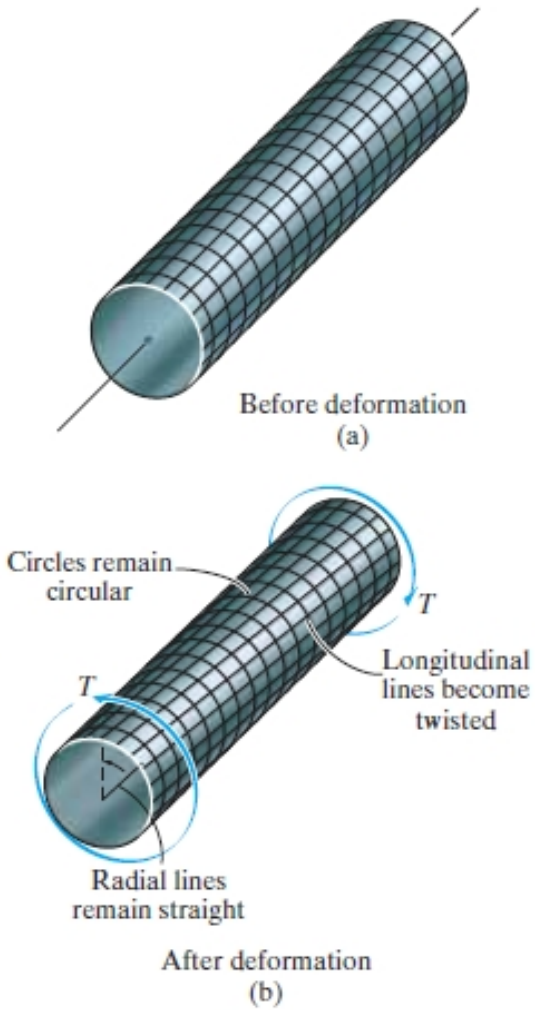

- *Torque*: moment to twist a member about its longitudinal axis
- If the angle of twist is *small*, the length of the shaft and its radius remain *unchanged*.

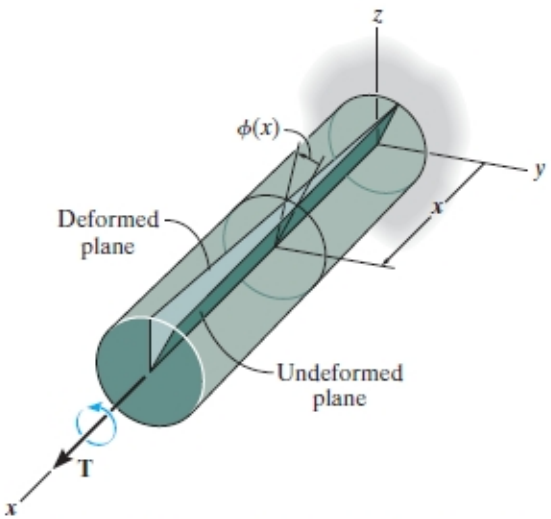

The angle of twist $\phi(x)$ increases as x increases.

Shear strain

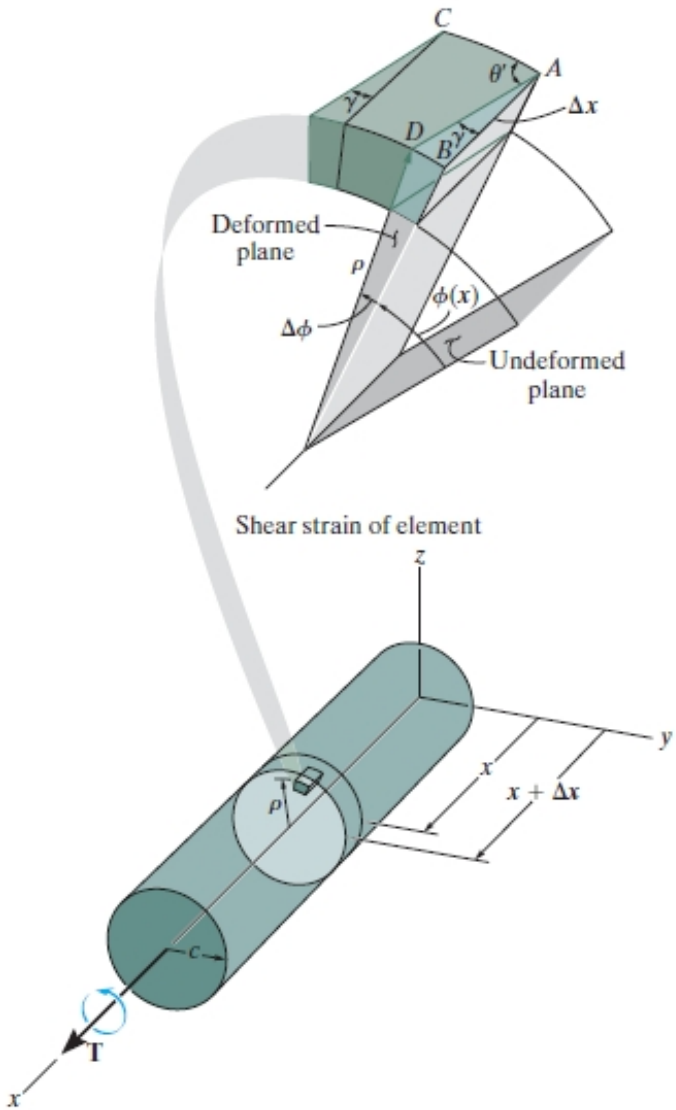

- Shear strain by definition

$$\gamma = \frac{\pi}{2} - \theta'$$

- The length of arc BD

$$BD = \rho \Delta\phi = \gamma \Delta x$$

- Shear strain in a circular shaft

$$\gamma = \rho \frac{d\phi}{dx}$$

Shear strain

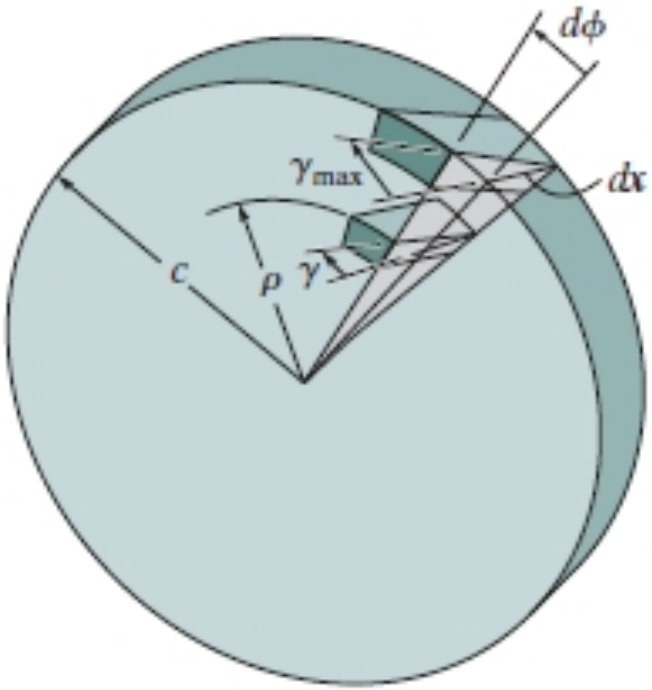

The shear strain at points on the cross section increases linearly with ρ, i.e., $\gamma = (\rho/c)\gamma_{max}$.

- Shear strain

$$\gamma = \rho \frac{d\phi}{dx}$$

- The shear strain within the shaft varies *linearly* along any radial line, from zero at the axis of the shaft to a maximum γ_{max} at its outer boundary.

$$\gamma = \left(\frac{\rho}{c}\right)\gamma_{\max}$$

Torsion formula

$$\gamma = \frac{\rho}{c}\gamma_{\max}, \quad \gamma = \frac{\tau}{G} \quad \Rightarrow \quad \tau = \frac{\rho}{c}\tau_{\max}$$

$$dT = \rho(\tau dA)$$

$$T = \int_A \rho(\tau dA) = \int_A \rho\left(\frac{\rho}{c}\right)\tau_{\max}\, dA$$

$$= \frac{\tau_{\max}}{c}\int_A \rho^2\, dA = \frac{\tau_{\max}}{c} J$$

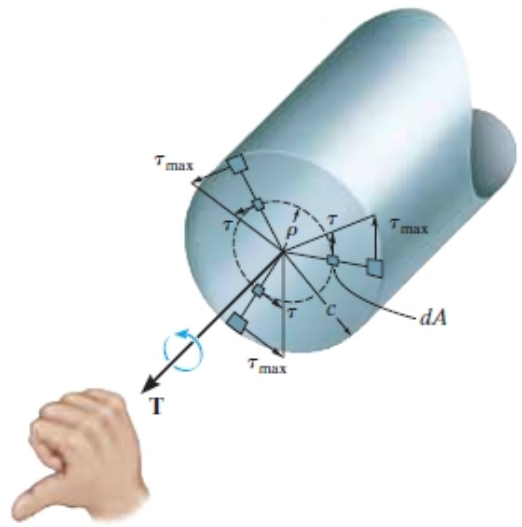

Shear stress varies linearly along each radial line of the cross section.

$$\tau_{\max} = \frac{Tc}{J}$$

$$\tau = \frac{T\rho}{J}$$

τ_{max} = the maximum shear stress

T = the resultant internal torque

J = the polar moment of inertia

c = the outer radius of the shaft

ρ = the intermediate distance

Solid shaft

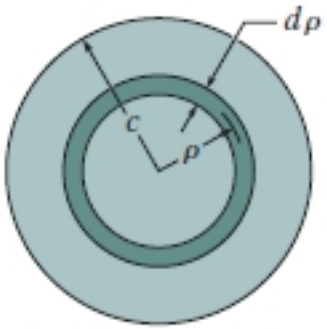

the polar moment of an inertia

$$J = \int_A \rho^2 \, dA = \int_0^c \rho^2 \left(2\pi\rho d\rho\right) = \frac{\pi}{2} c^4 = \frac{\pi}{32} d^4$$

The internal torque *T* develops a linear distribution of shear stress not only *along each radial line in the plane of the cross-sectional area*, but also *along an axial plane*.

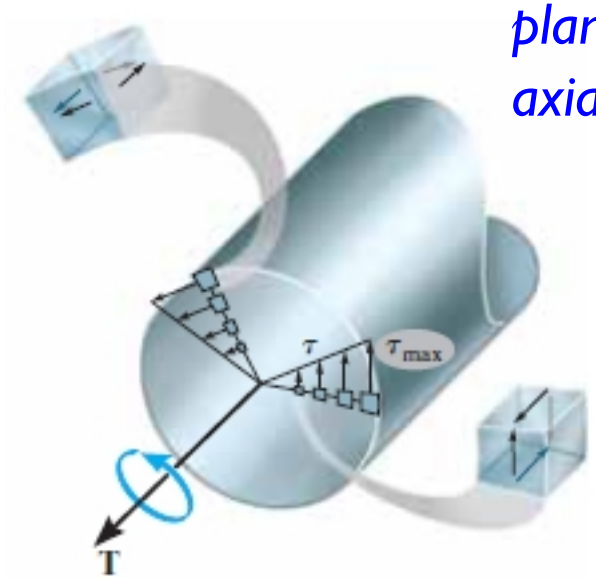

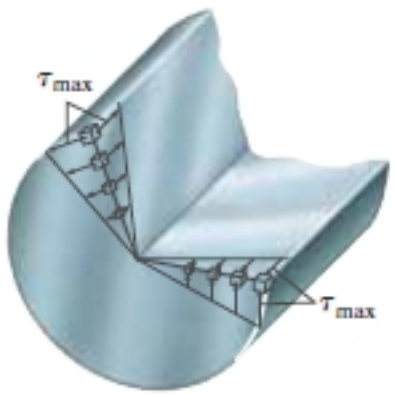

Shear stress varies linearly along each radial line of the cross section.

Tubular shaft

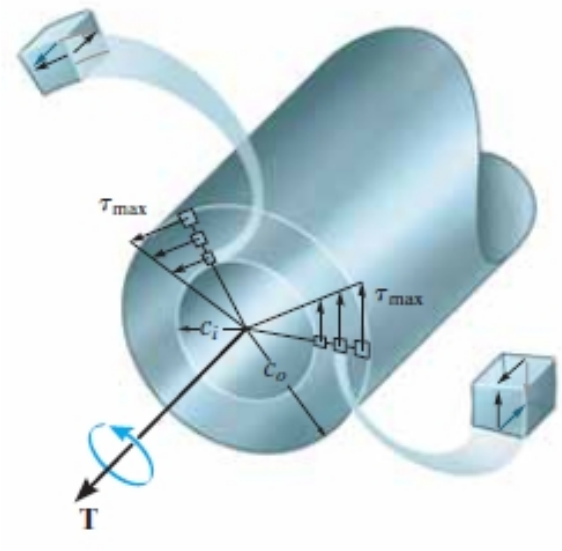

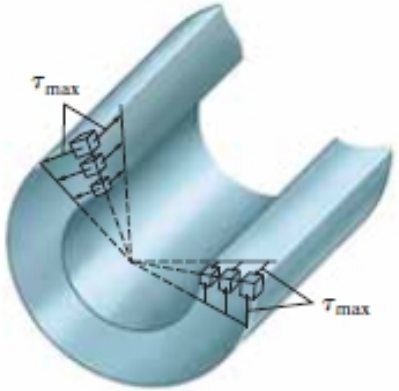

Shear stress varies linearly along each radial line of the cross section.

the polar moment of an inertia

$$J = \frac{\pi}{2}\left(c_o^4 - c_i^4\right)$$

Example 5.1

The solid shaft of radius *c* is subjected to a torque *T*. determine the fraction of *T* that is resisted by the material contained within the outer region of the shaft, which has an inner radius of *c*/2 and outer radius *c*.

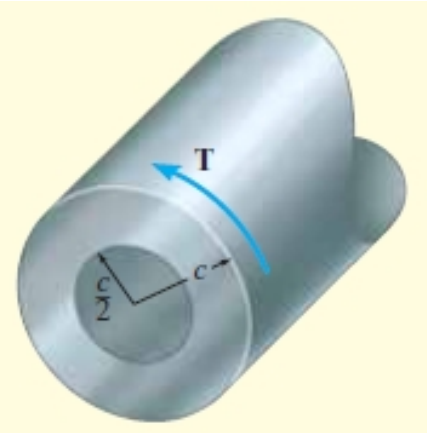

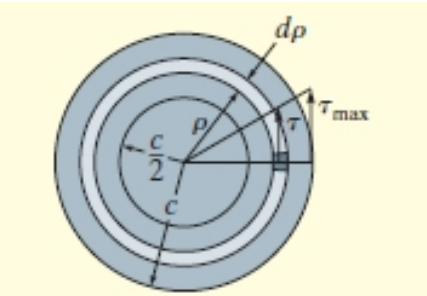

Example 5.1

Example 5.2

Determine the shear stress developed at points *A* and *B*, located at section *a*-*a* of the shaft.

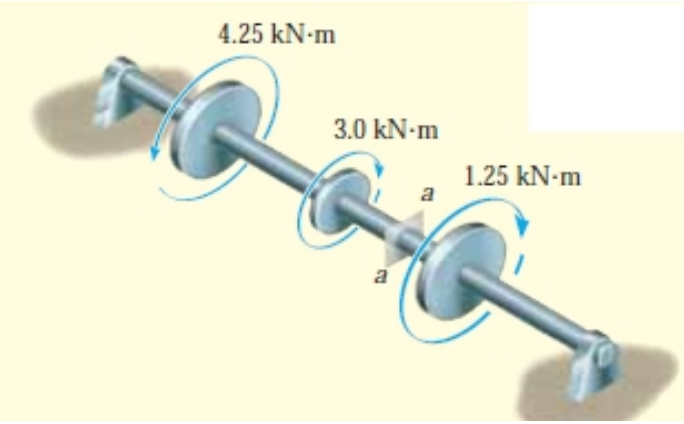

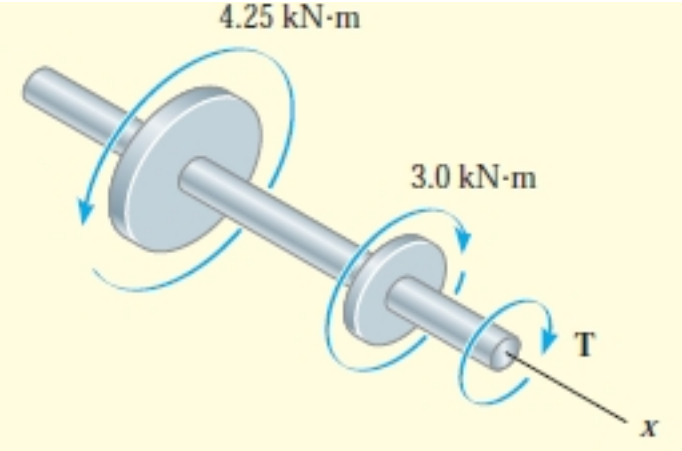

Example 5.2

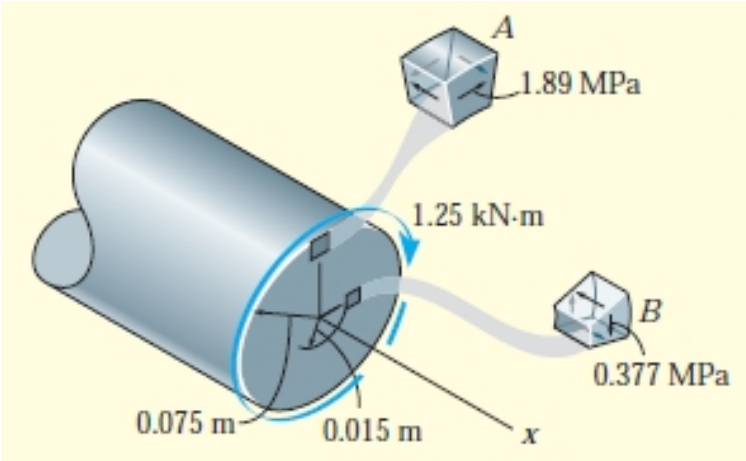

Power transmission

- Work = Force × Displacement
- Power = Work per unit time

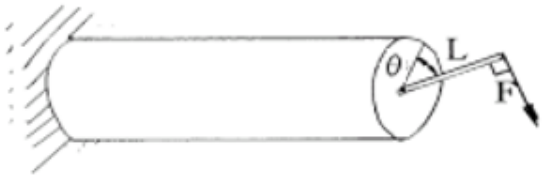

$$W = F \cdot L\theta = FL \cdot \theta = T \cdot \theta$$

$$P = \frac{dW}{dt} = \frac{d\left(T \cdot \theta\right)}{dt} = T \cdot \frac{d\theta}{dt} = T\omega$$

$$P = T\omega = 2\pi fT$$

- Unit of power: $N \cdot m/\sec = Joule/\sec = Watt$

Shaft design

$$\tau = \frac{Tc}{J} \quad \rightarrow \quad \frac{J}{c} = \frac{T}{\tau_{allow}}$$

for a solid shaft: $J = \frac{\pi}{2} c^4$

for a tubular shaft: $J = \frac{\pi}{2}\left(c_o^4 - c_i^4\right)$

Example 5.4

A solid steel shaft *AB* is to be used to transmit 3750W from the motor *M* to which it is attached. If the shaft rotates at w = 175 rpm and the steel has an allowable shear stress of t_{allow} = 100 MPa, determine the required diameter of the shaft to the nearest mm.

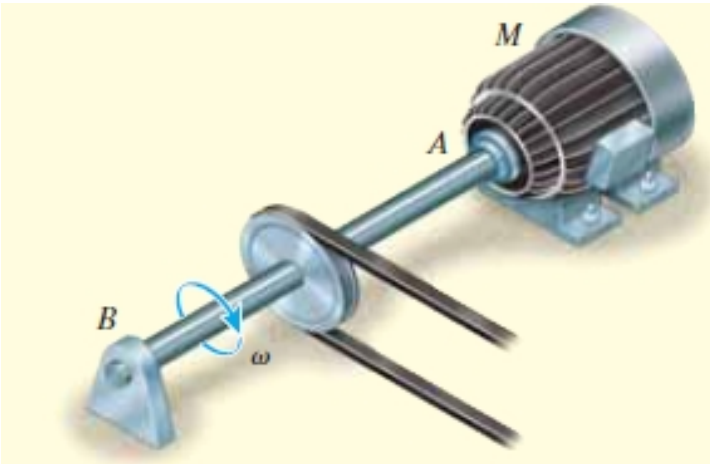

Example 5.4

Angle of twist

$$\rho d\phi = \gamma dx \quad \rightarrow \quad d\phi = \gamma \frac{dx}{\rho} \quad \rightarrow \quad d\phi = \frac{T(x)}{J(x)G} dx$$

$$\tau = \frac{T(x)\rho}{J(x)} \quad \rightarrow \quad \gamma = \frac{T(x)\rho}{J(x)} \frac{1}{G}$$

$$\therefore \phi = \int_0^L \frac{T(x)}{J(x)G} dx$$

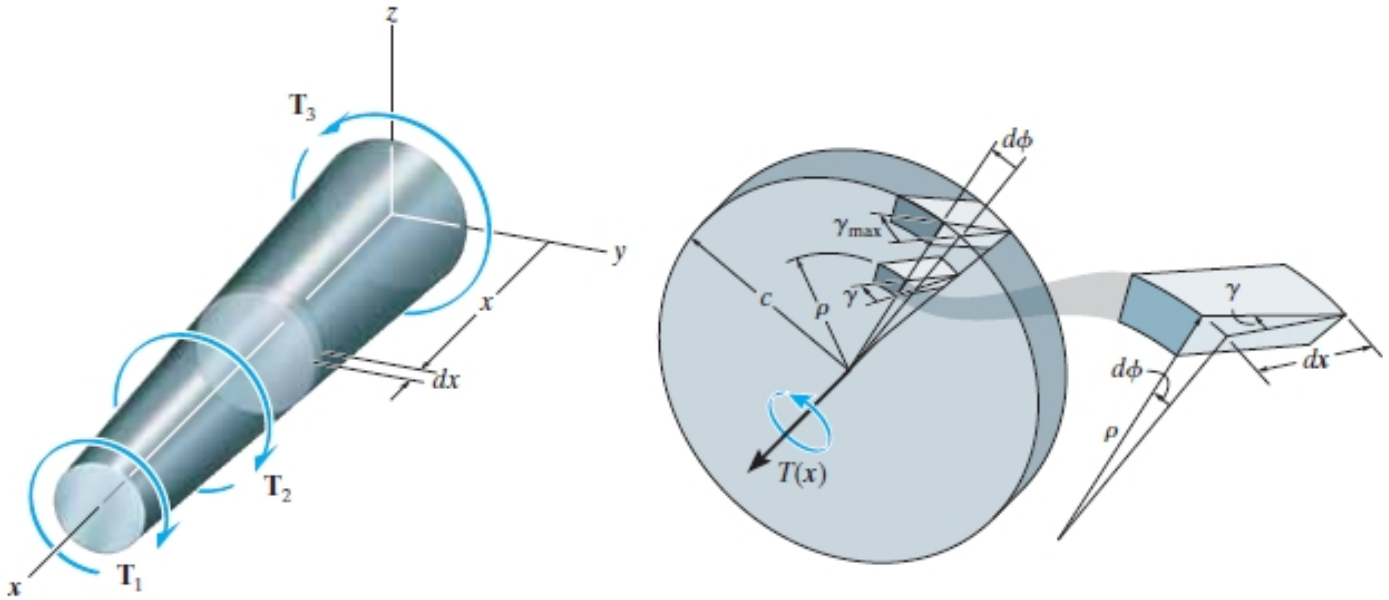

Angle of twist

$$\phi = \int_0^L \frac{T(x)}{J(x)G} dx$$

for constant torque and cross-sectional area: $\phi = \frac{TL}{JG}$

(for an axially loaded bar: $\delta = \int_0^L \frac{P(x)}{A(x)E} dx, \quad \delta = \frac{PL}{AE}$)

for multiple torques with constant quantities: $\phi = \sum \frac{TL}{JG}$

Angle of twist

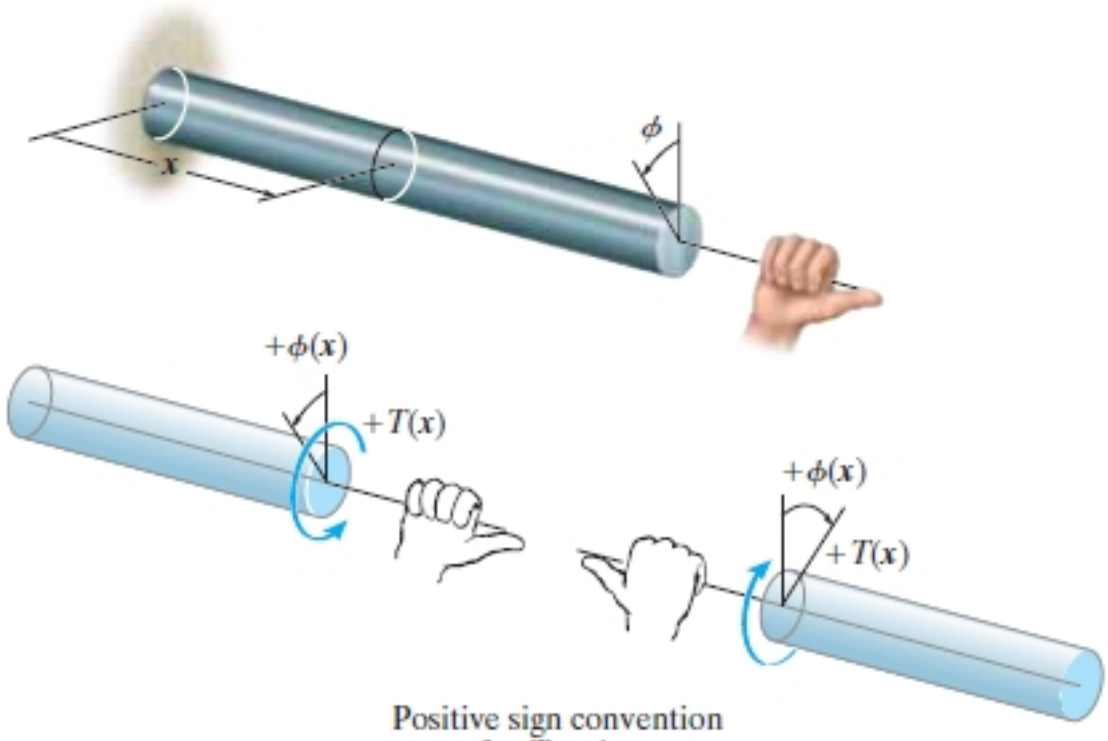

Positive sign convention for T and ϕ.

Example 5.6

Determine the angle of twist of end *A* of shaft *AB* when the torque *T* = 45 Nm is applied. Take *G* = 80 GPa. Shaft *AB* is free to rotate within bearings *E* and *F*, whereas shaft *DC* is fixed at *D*. Each shaft has a diameter of 20 mm.

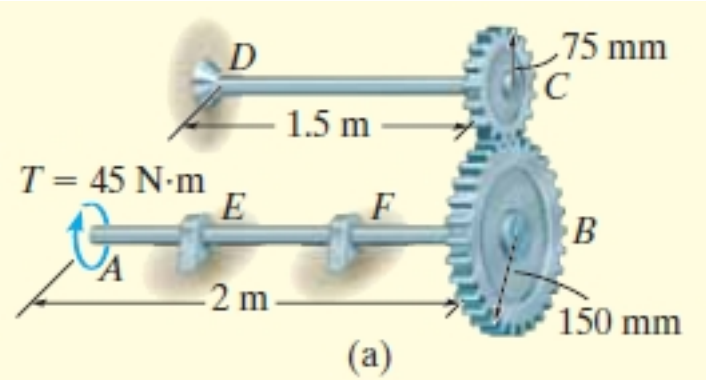

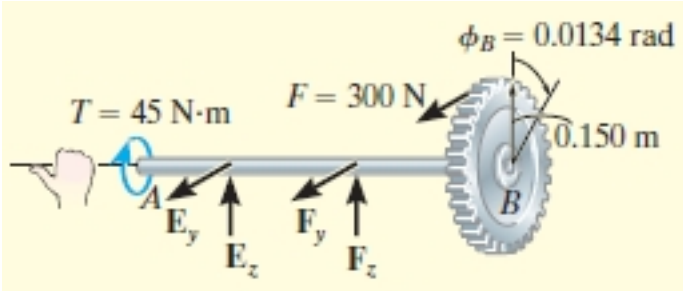

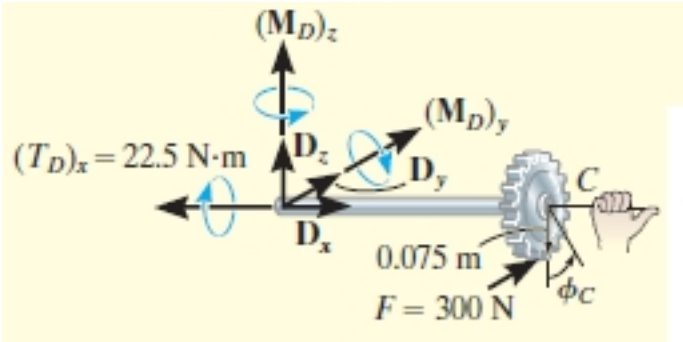

Example 5.6

Example 5.7

The 0.5m diameter solid cast-iron post is buried 0.6m in soil. If a torque is applied to its top using a rigid wrench, determine the maximum shear stress in the post and the angle of twist at its top. Assume that the torque is about to turn the post, and the soil exerts a uniform torsional resistance of *t* N•mm/mm Take *G* = 40 GPa.

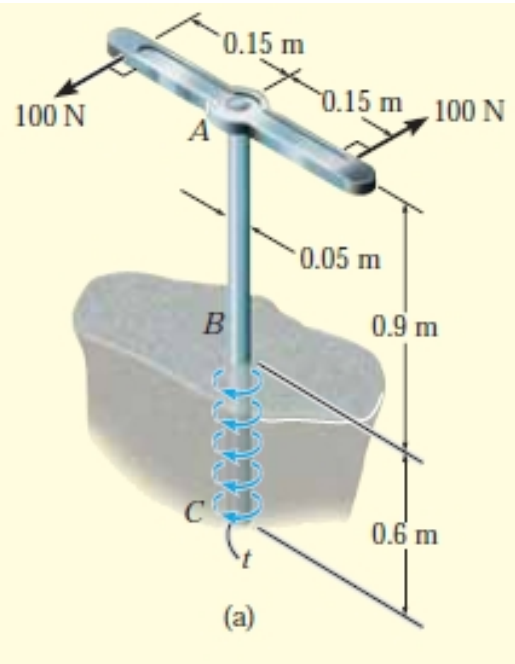

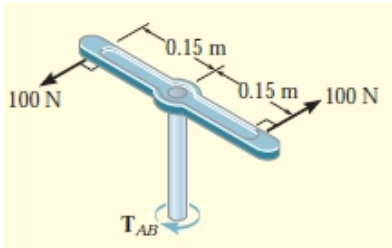

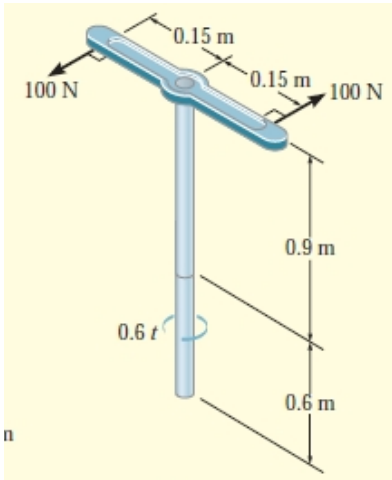

Example 5.6

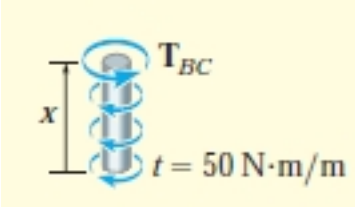

Statically indeterminate system

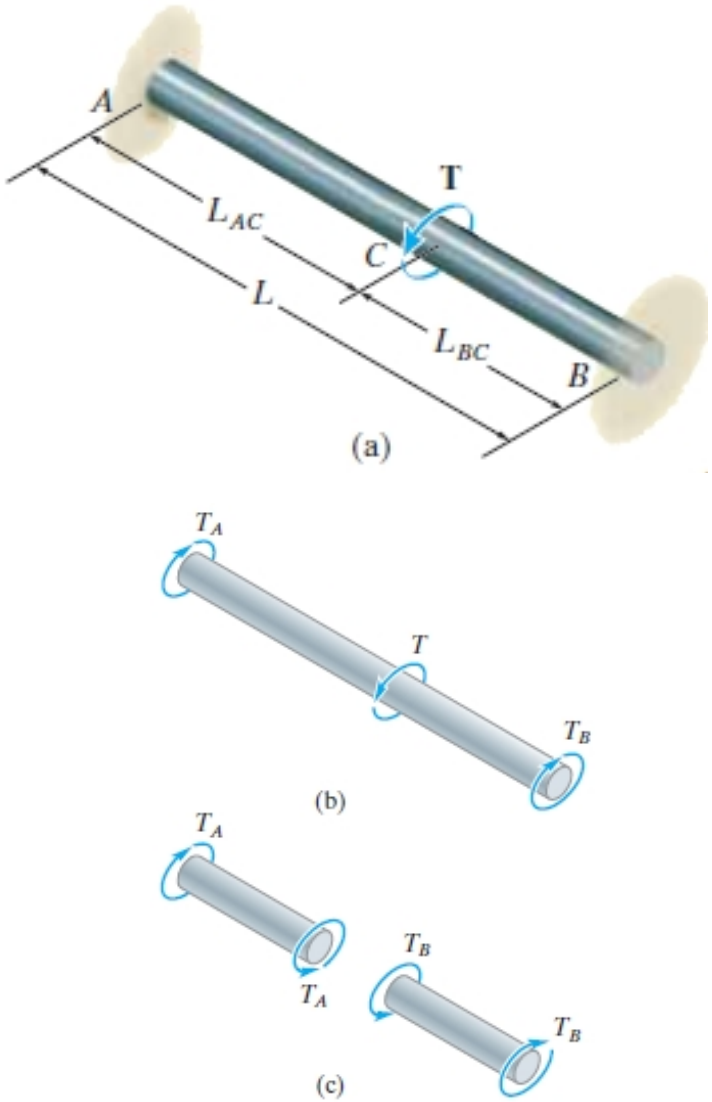

Equilibrium condition:

$$\sum M_x = 0; \quad T - T_A - T_B = 0$$

Compatibility condition:

$$\phi_{A/B} = 0$$

$$\frac{T_A L_{AC}}{JG} - \frac{T_B L_{BC}}{JG} = 0$$

or $$T_A = T\left(\frac{L_{BC}}{L}\right) \quad T_B = T\left(\frac{L_{AC}}{L}\right)$$

Example 5.8

The solid steel shaft with a diameter of 20 mm is subjected to the two torques. Determine the reactions at the fixed supports *A* and *B*.

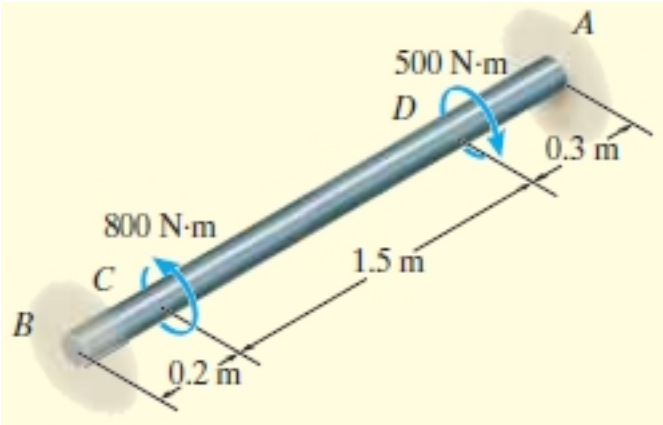

Example 5.8

Example 5.9

If a torque of T = 250 Nm is applied at the steel shaft, plot the shear-stress distribution along a radial line of its cross-sectional area. Take G_{st} = 80 GPa, G_{br} = 36 Gpa.

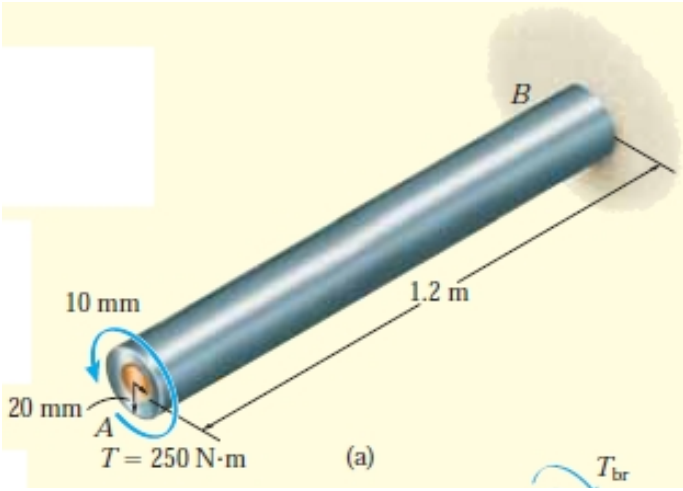

Example 5.9