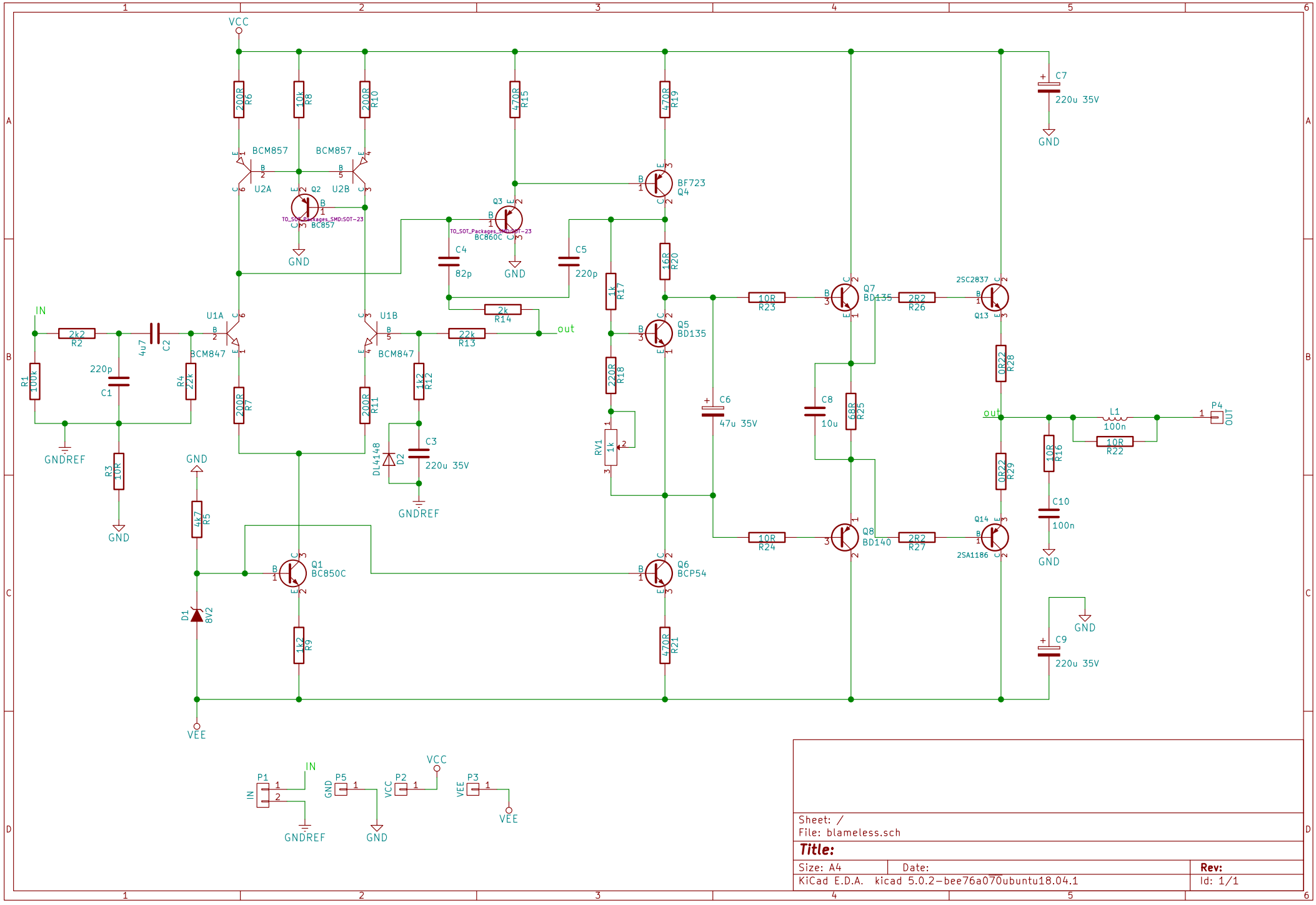

Sheet: /
File: blameless.sch

Title:

Size: A4	Date:	Rev:
KiCad E.D.A. kicad 5.0.2-bee76a070ubuntu18.04.1		Id: 1/1