DUNE Monolithic Minisas FEMB ver F

TABLE OF CONTENTS

SHEET 1: Title
SHEET 2: Power IN & AC Coupling Reulator
SHEET 3: Power Left ADC Regulator
SHEET 4: Power Left FE ASIC Regulator
SHEET 5: Power Right ADC
SHEET 6: Power Right FE ASIC
SHEET 7: Signal Inputs
SHEET 8: Input Protection Diodes 1
SHEET 9: Input Protection Diodes 2
SHEET 10: Input Caps and Inductors
SHEET 11: FE-ADC ASICs 1 and 2
SHEET 12: FE ASIC 1
SHEET 13: ADC ASIC 1
SHEET 14: FE ASIC 2
SHEET 15: ADC ASIC 2
SHEET 16: FE-ADC ASICs 3 and 4
SHEET 17: FE ASIC 3
SHEET 18: ADC ASIC 3
SHEET 19: FE ASIC 4
SHEET 20: ADC ASIC 4
SHEET 21: FE-ADC ASICs 5 and 6
SHEET 22: FE ASIC 5
SHEET 23: ADC ASIC 5
SHEET 24: FE ASIC 6
SHEET 25: ADC ASIC 6
SHEET 26: FE-ADC ASICs 7 and 8
SHEET 27: FE ASIC 7
SHEET 28: ADC ASIC 7
SHEET 29: FE ASIC 8
SHEET 30: ADC ASIC 8
SHEET 31: CDM TERM L and ASIC IO
SHEET 32: CDM TERM R and ASIC IO
SHEET 33: CDM WIB interface
SHEET 34: CDM Left msic io
SHEET 35: CDM Right msic io
SHEET 36: CDM ASIC power IO
SHEET 37: CDM PWR 1_2V and 1_1V
SHEET 38: CDM EXT DAC or REG CONTROL
SHEET 39: ColdADC Voltage Monitor Select

BROOKHAVEN NATIONAL LABORATORY
INSTRUMENTATION DIVISION

TITLE
TITLE

SIZE B	BOARD : DUNE_AM V2
DRAWN : Jack Fried	DATE : 17/03/2023:15:04

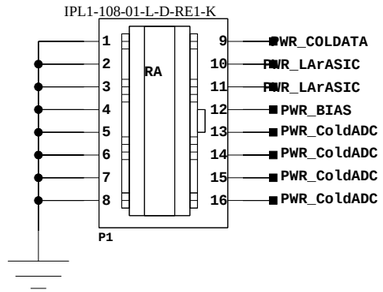

Board Power (voltage measured at F

PWR_COLDATA	2.5V @ 200mA
PWR_LArASIC	2.5V @ 770mA
PWR_COLDADC	2.5V @ 1.28A
Bias	5V @

Name of power rails on WIB

PWR_COLDATA	==	DC2DC_02_BRDx
PWR_LArASIC	==	DC2DC_01_BRDx
BIAS	==	BIAS_BRDx
PWR_ColdADC	==	DC2DC_03_BRDx

5V bias filter

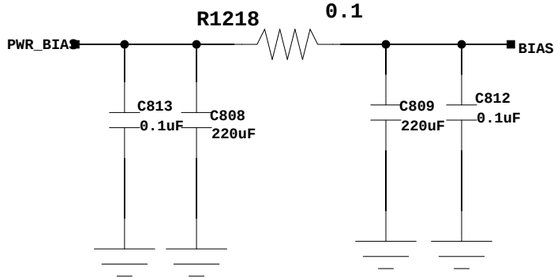

LArASIC Left, Right Regulator Control

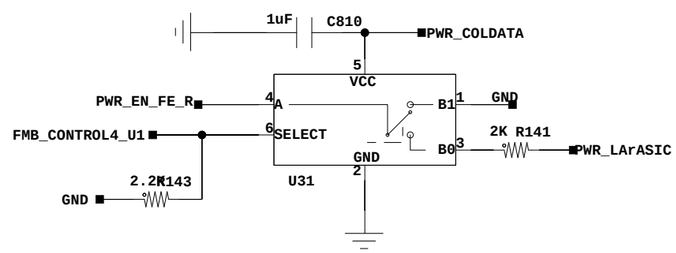

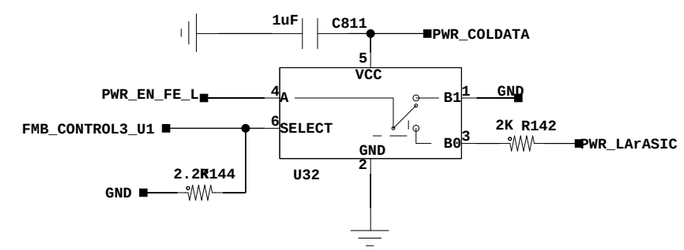

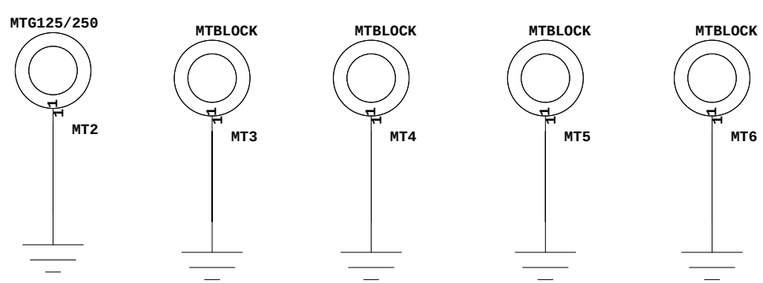

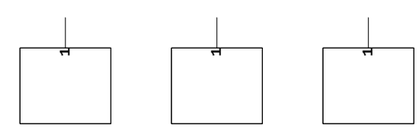

BROOKHAVEN NATIONAL LABORATORY
INSTRUMENTATION DIVISION

TITLE
Power IN - AC Coupling

SIZE B	BOARD : DUNE_AM V2
DRAWN : Jack Fried	DATE : 06/07/2022:12:00

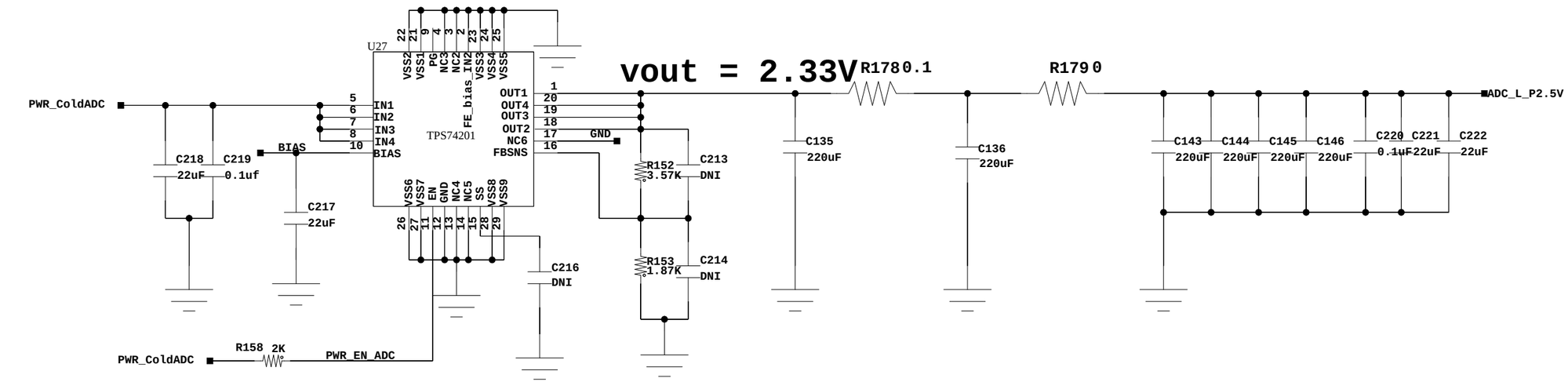

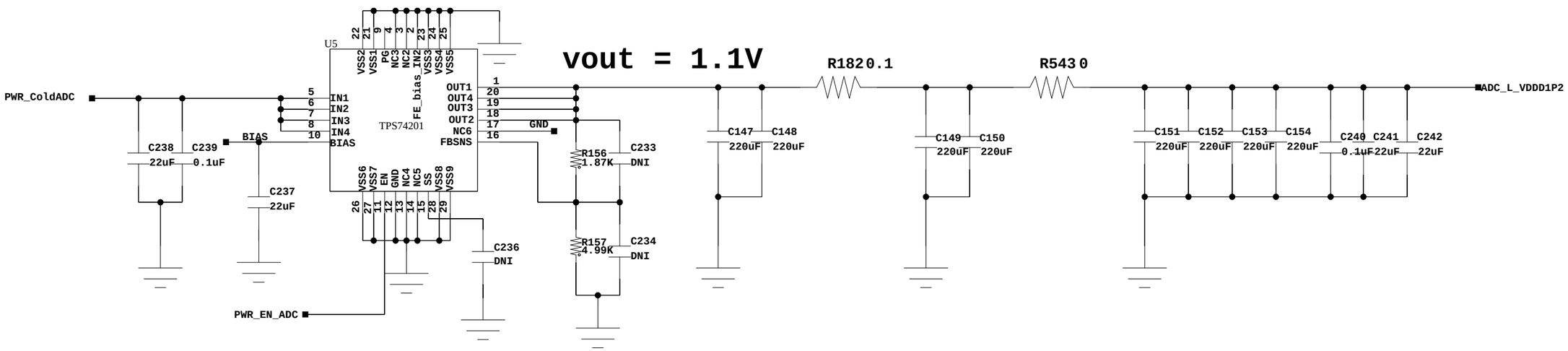

BROOKHAVEN NATIONAL LABORATORY
INSTRUMENTATION DIVISION

TITLE Power Left ADC Regula

SIZE B	BOARD : DUNE_AM V2
DRAWN : Jack Fried	DATE : 06/07/2022:11:49

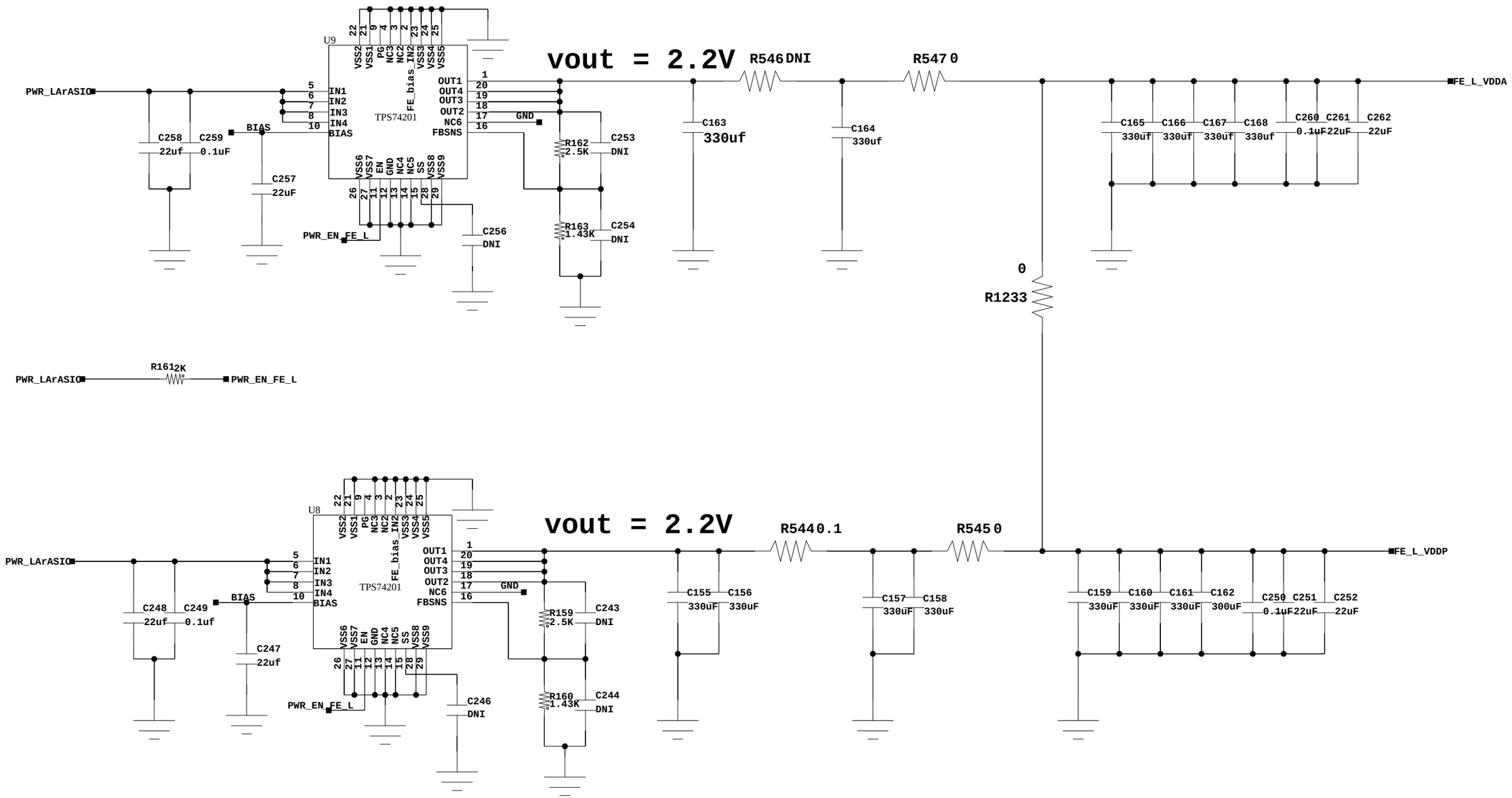

BROOKHAVEN NATIONAL LABORATORY
INSTRUMENTATION DIVISION

TITLE **Power Left FE ASIC Regu**

SIZE B	BOARD : DUNE_AM V2
DRAWN : Jack Fried	DATE : 06/07/2022:11:49

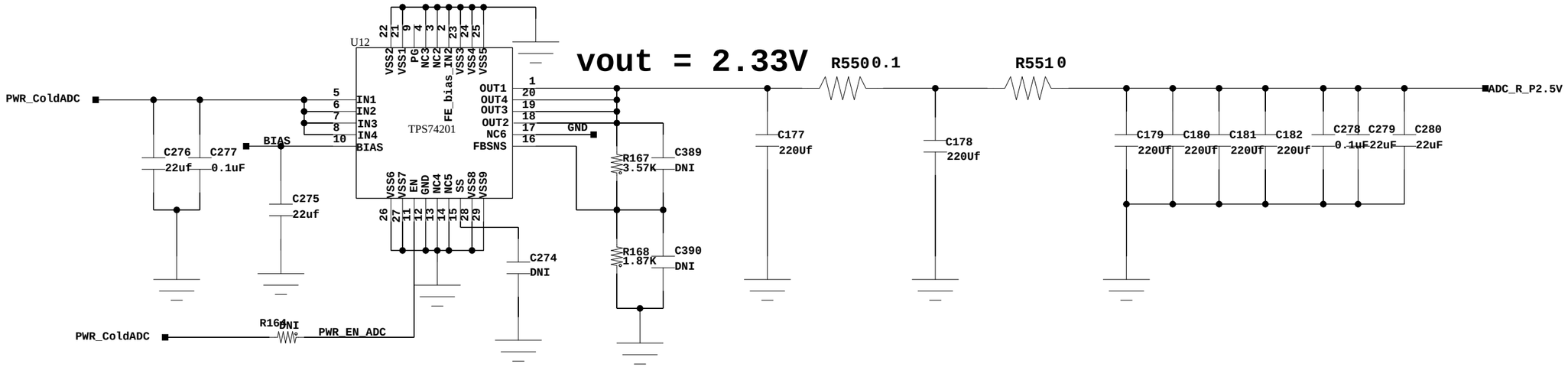

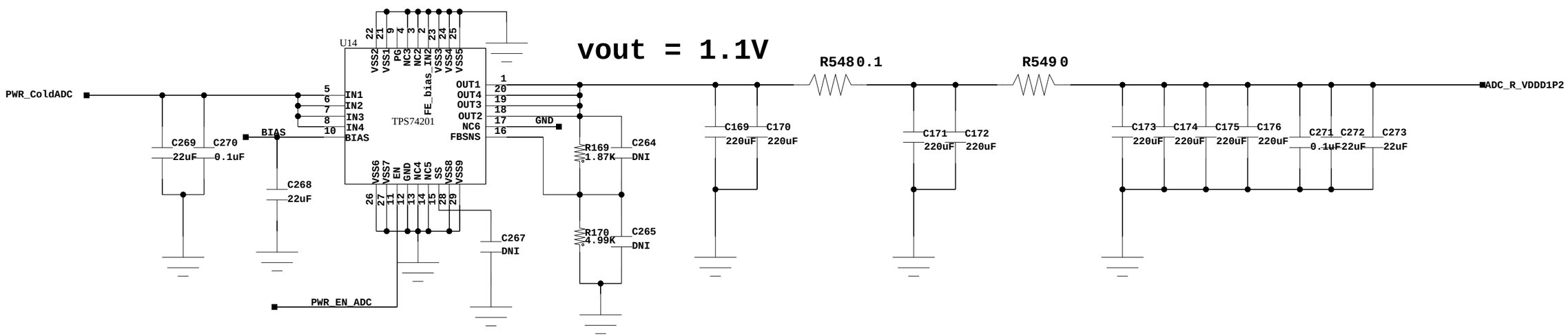

BROOKHAVEN NATIONAL LABORATORY
INSTRUMENTATION DIVISION

TITLE
Power Right ADC Regu

SIZE B	BOARD : DUNE_AM V2
DRAWN : Jack Fried	DATE : 06/07/2022:11:49

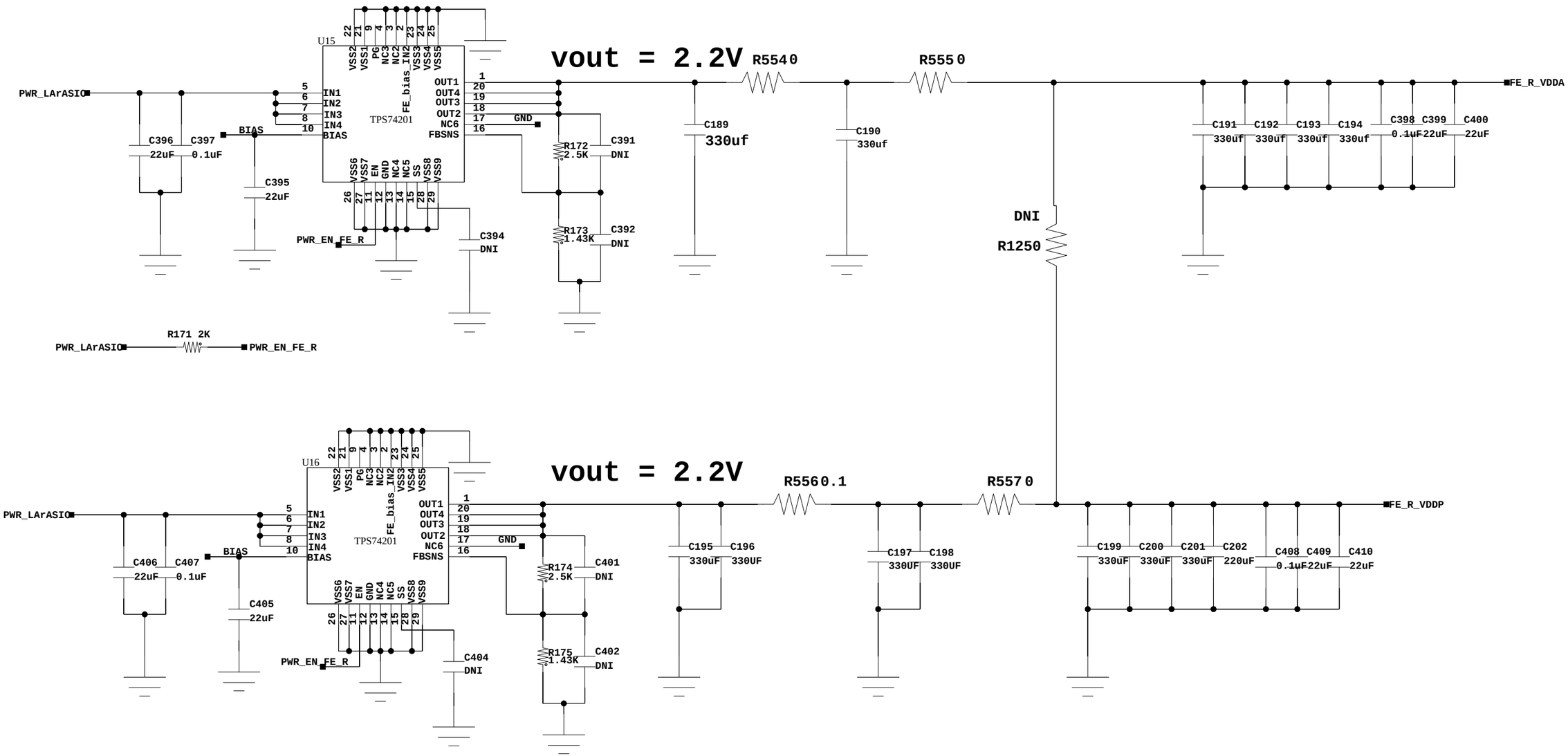

BROOKHAVEN NATIONAL LABORATORY
INSTRUMENTATION DIVISION

TITLE **Power Right FE ASIC Reg**

SIZE B	BOARD : DUNE_AM V2
DRAWN : Jack Fried	DATE : 06/07/2022:11:49

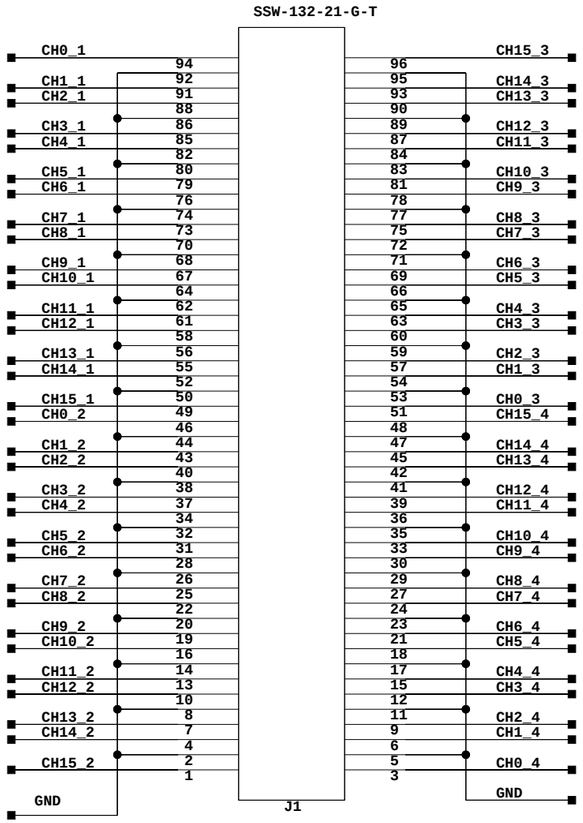

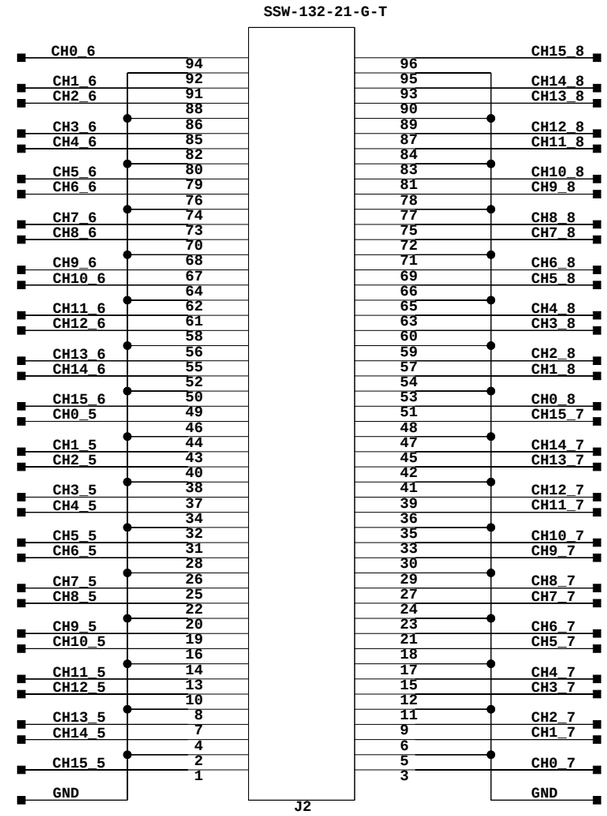

BROOKHAVEN NATIONAL LABORATORY
INSTRUMENTATION DIVISION

TITLE: **Signal Inputs**

SIZE: B	BOARD : DUNE_AM V2
DRAWN : Jack Fried	DATE : 06/07/2022:11:49

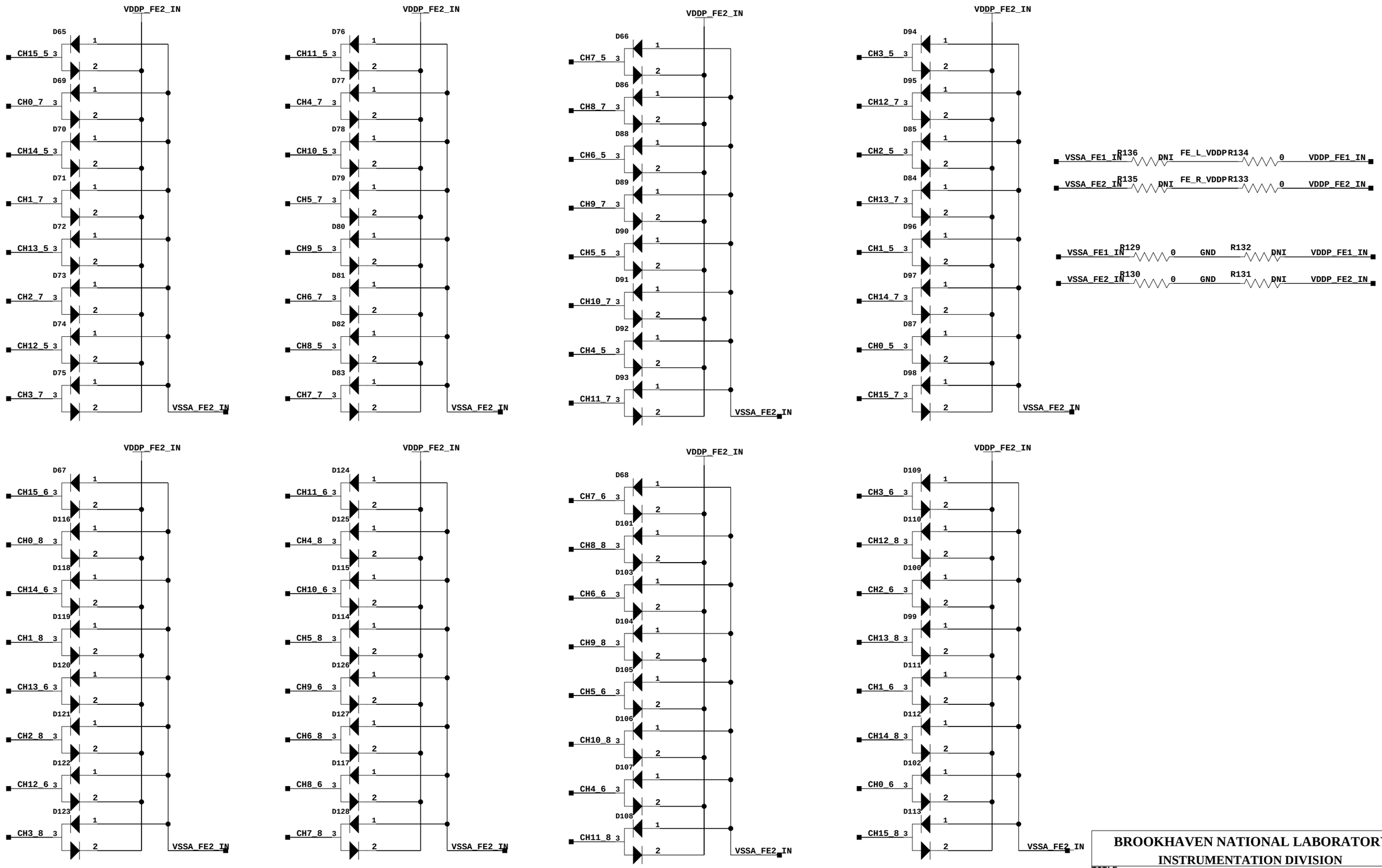

BROOKHAVEN NATIONAL LABORATORY
INSTRUMENTATION DIVISION

TITLE Input Protection Di

SIZE B	BOARD : DUNE_AM V2
DRAWN : Jack Fried	DATE : 20/03/2023:17:27

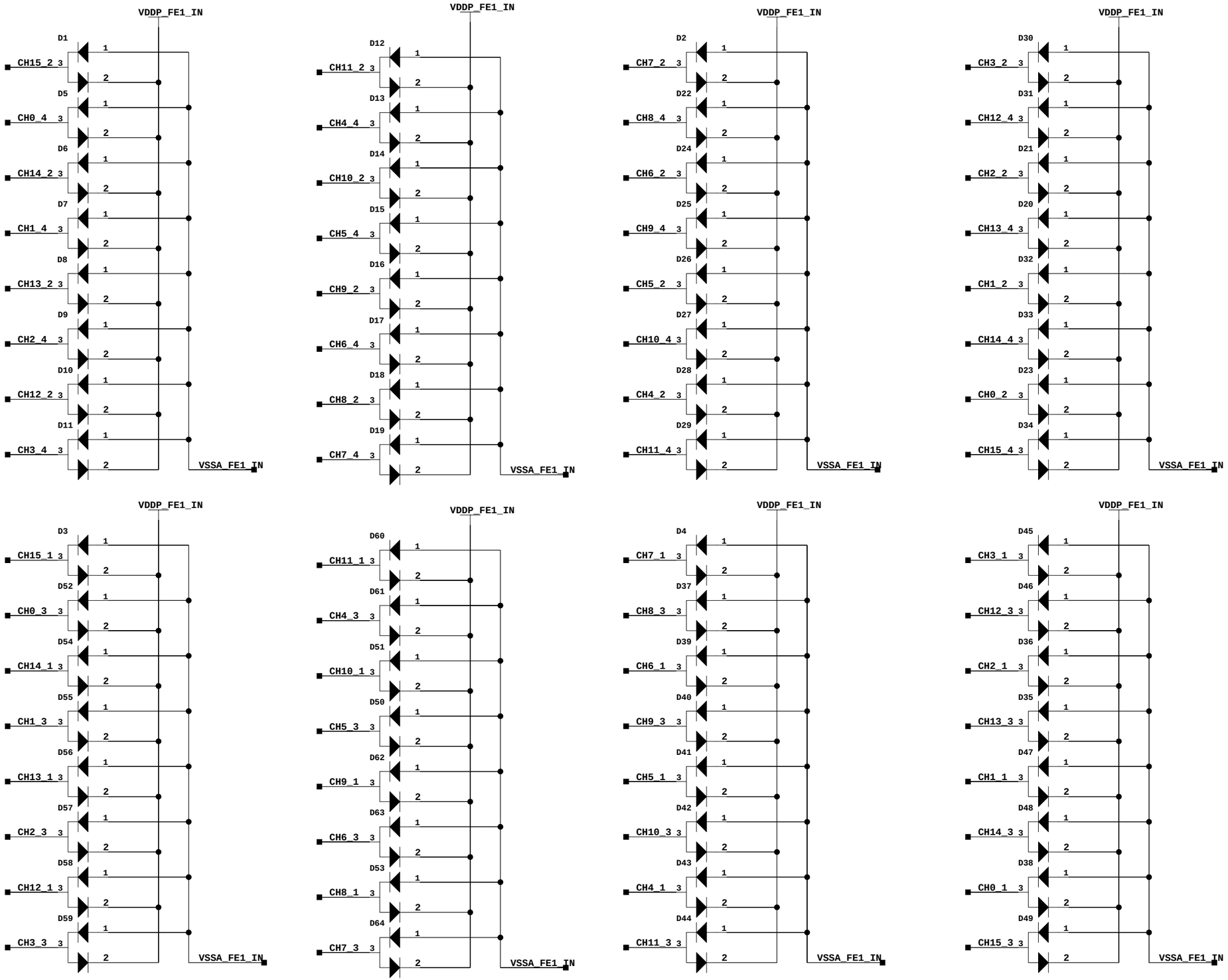

BROOKHAVEN NATIONAL LABORATORY
INSTRUMENTATION DIVISION

TITLE Input Protection Di

SIZE B	BOARD : DUNE_AM V2
DRAWN : Jack Fried	DATE : 06/07/2022:11:49

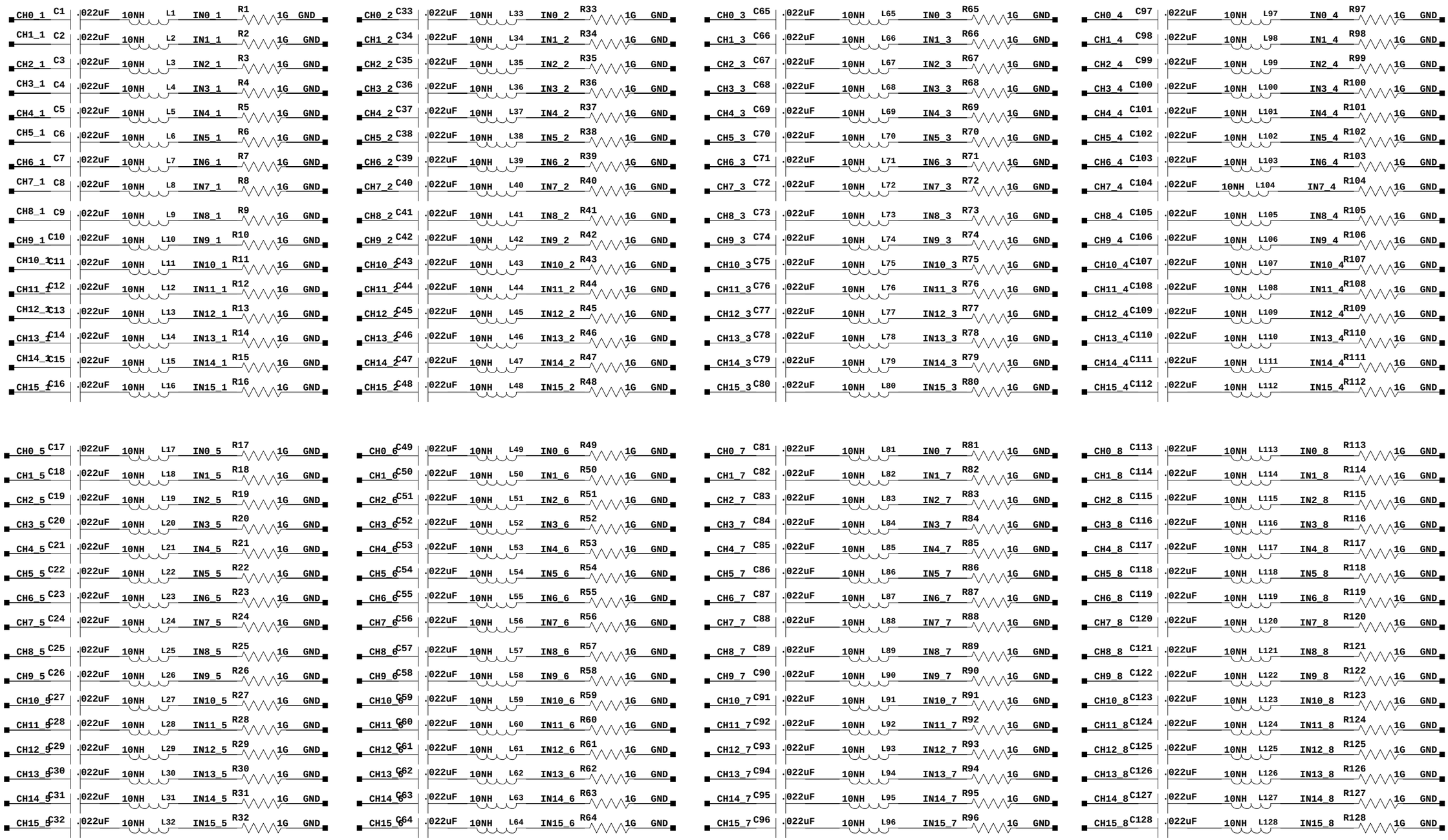

BROOKHAVEN NATIONAL LABORATORY
INSTRUMENTATION DIVISION

TITLE **Input Caps and Indu**

SIZE B	BOARD : DUNE_AM V2
DRAWN : Jack Fried	DATE : 06/07/2022:11:49

ASIC CHAIN 1

TOP

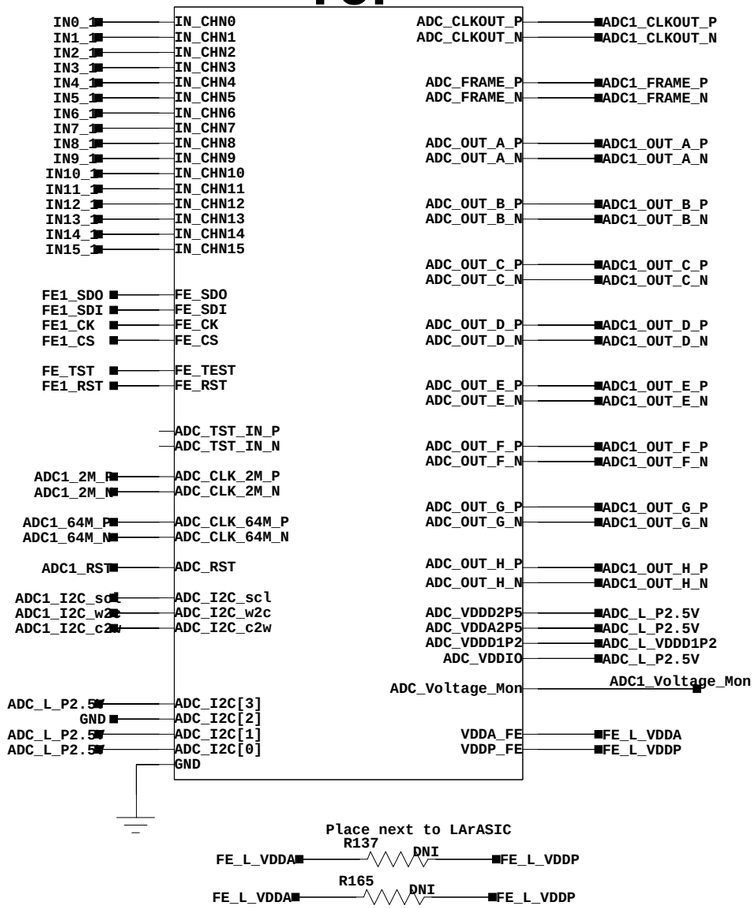

I2C ADDR = 0x0B

ASIC CHAIN 2

TOP

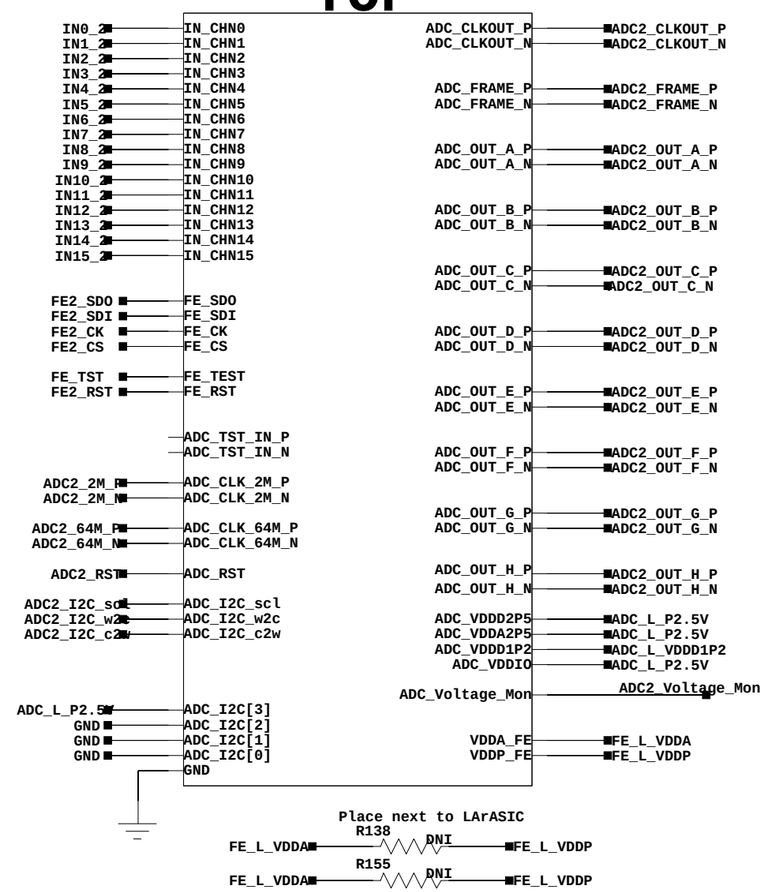

I2C ADDR = 0x08

BROOKHAVEN NATIONAL LABORATORY
INSTRUMENTATION DIVISION

TITLE
FE-ADC ASICs 1 and

SIZE B	BOARD : DUNE_AM V2
DRAWN : Jack Fried	DATE : 06/07/2022:11:49

ASIC CHAIN 3

TOP

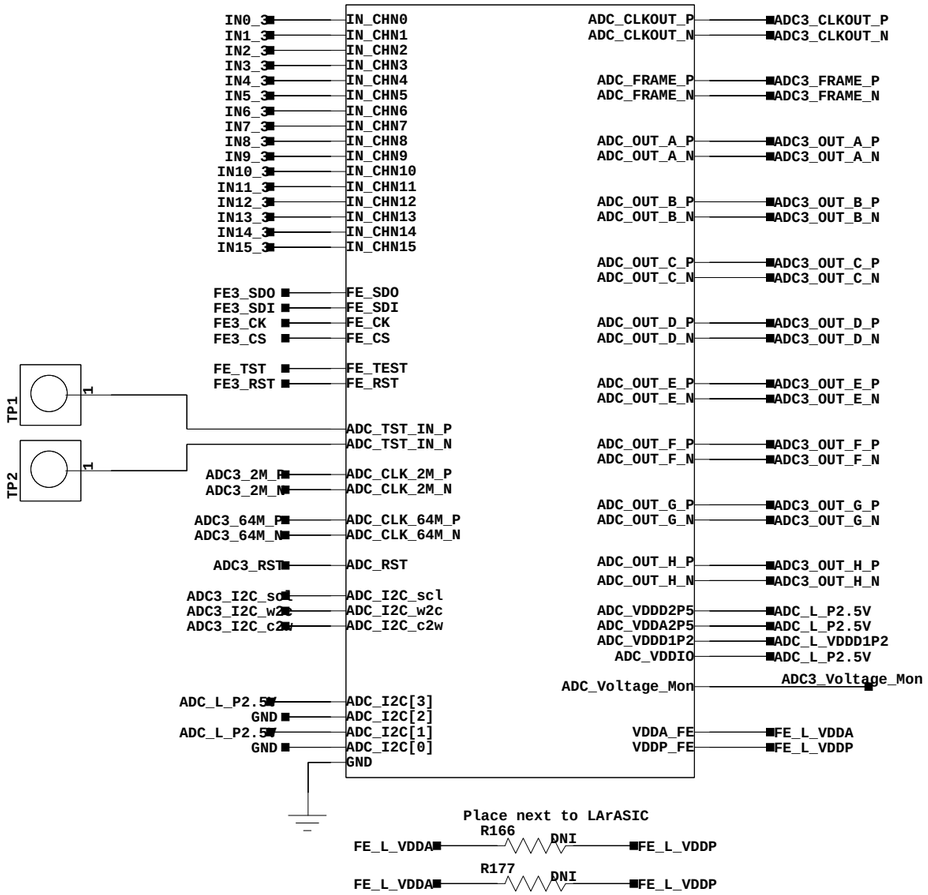

I2C ADDR = 0x0A

ASIC CHAIN 4

TOP

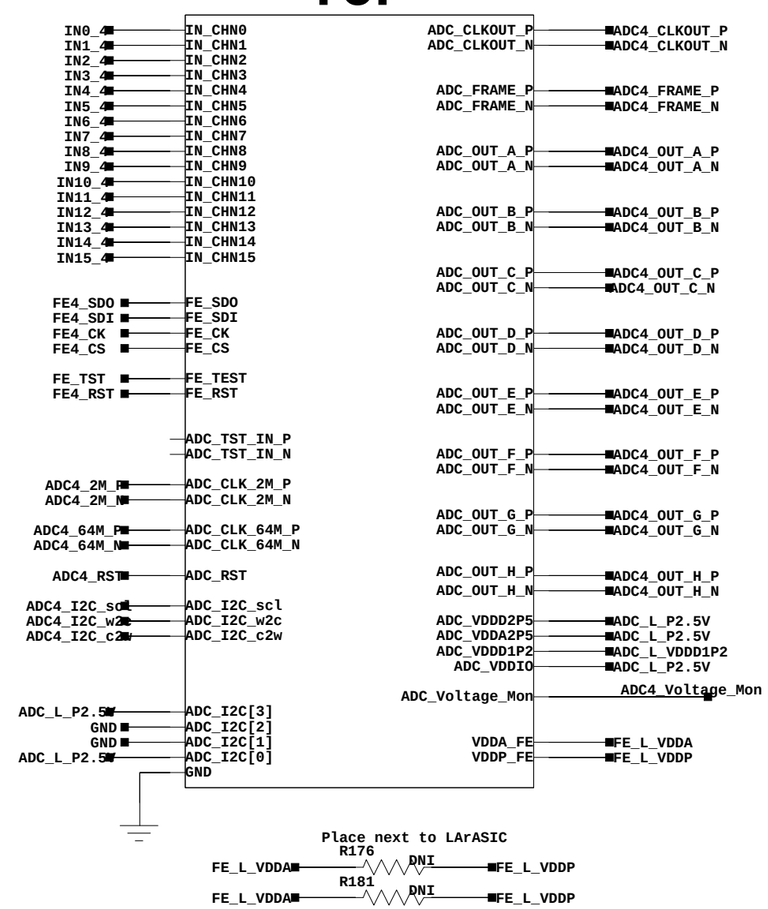

I2C ADDR = 0x09

BROOKHAVEN NATIONAL LABORATORY
INSTRUMENTATION DIVISION

TITLE **FE-ADC ASICs 3 and**

SIZE B	BOARD : DUNE_AM V2
DRAWN : Jack Fried	DATE : 06/07/2022:11:49

ASIC CHAIN 5

TOP

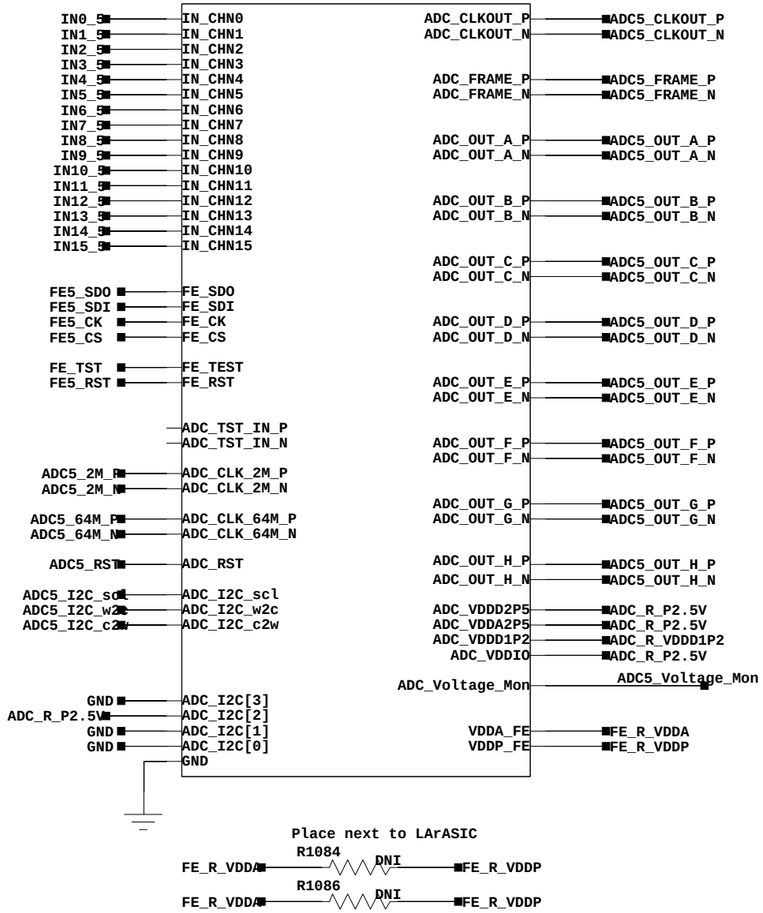

Place next to LArASIC

I2C ADDR = 0x04

ASIC CHAIN 6

TOP

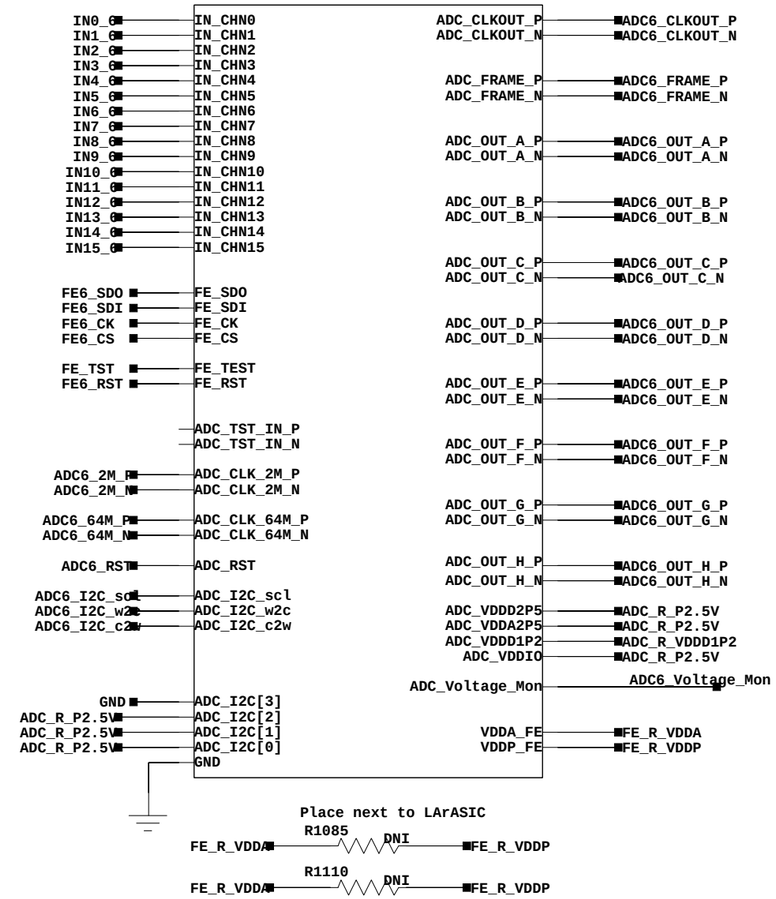

Place next to LArASIC

I2C ADDR = 0x07

BROOKHAVEN NATIONAL LABORATORY
INSTRUMENTATION DIVISION

TITLE: FE-ADC ASICs 5 and

SIZE: B	BOARD : DUNE_AM V2
DRAWN : Jack Fried	DATE : 06/07/2022:11:49

ASIC CHAIN 7

TOP

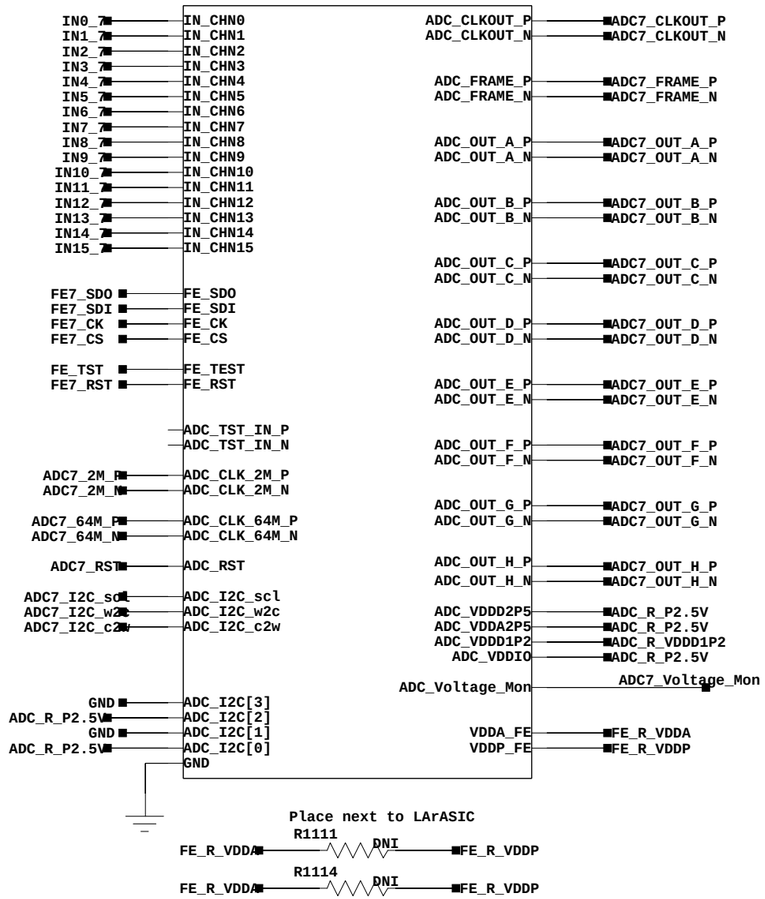

I2C ADDR = 0x05

ASIC CHAIN 8

TOP

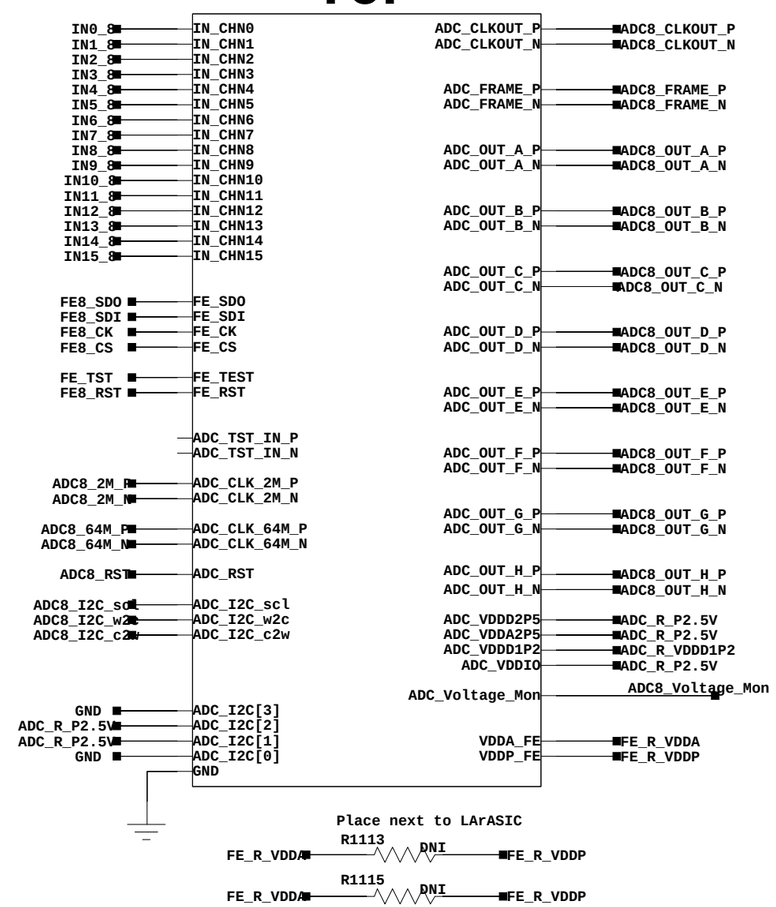

I2C ADDR = 0x06

BROOKHAVEN NATIONAL LABORATORY
INSTRUMENTATION DIVISION

TITLE **FE-ADC ASICs 7 and**

SIZE B	BOARD : DUNE_AM V2
DRAWN : Jack Fried	DATE : 06/07/2022:11:49

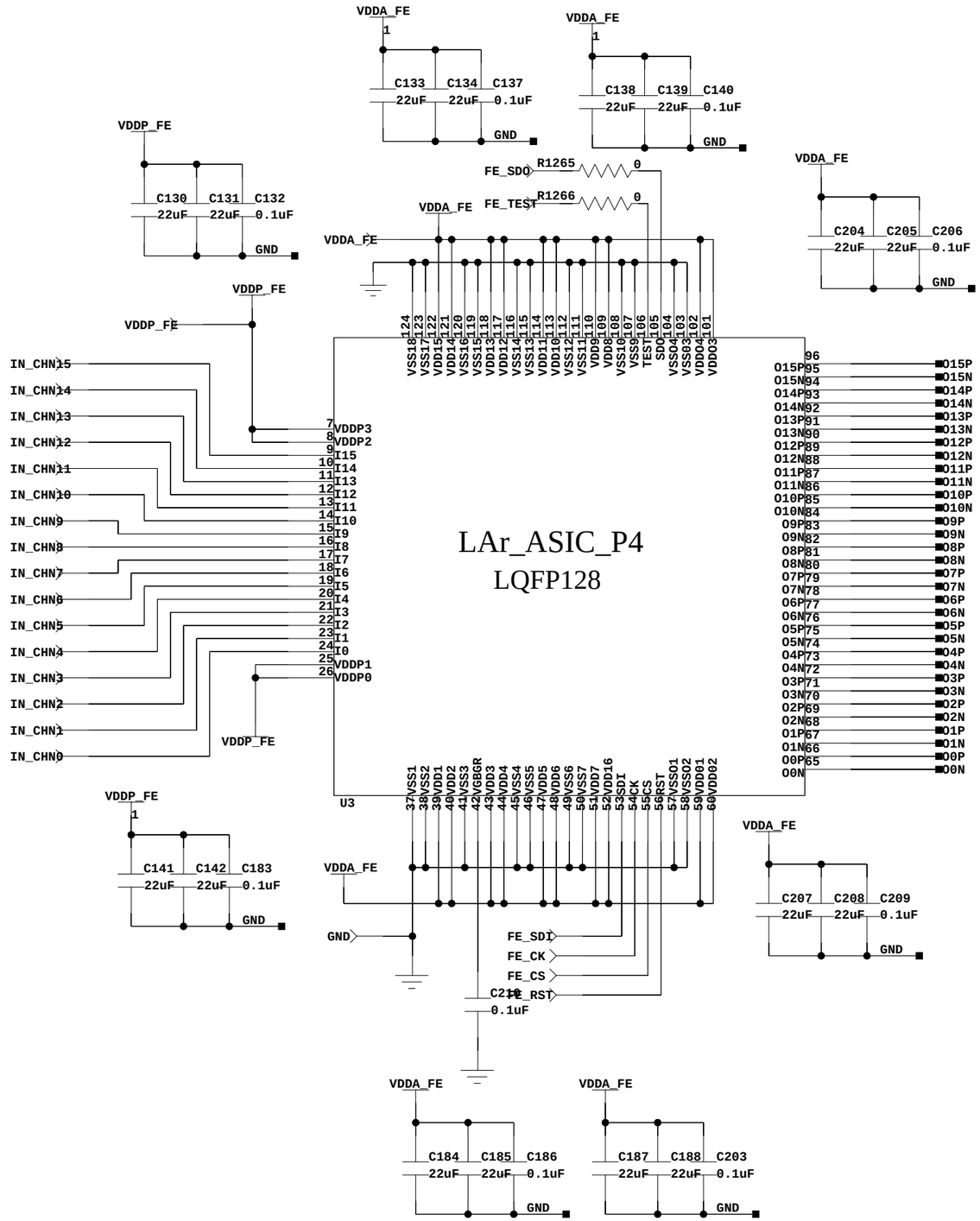

BROOKHAVEN NATIONAL LABORATORY
INSTRUMENTATION DIVISION

TITLE
FE ASIC

SIZE B	BOARD : ASIC_CHAIN
DRAWN : Jack Fried	DATE : 05/12/2023:11:32

@PRINTORDER=

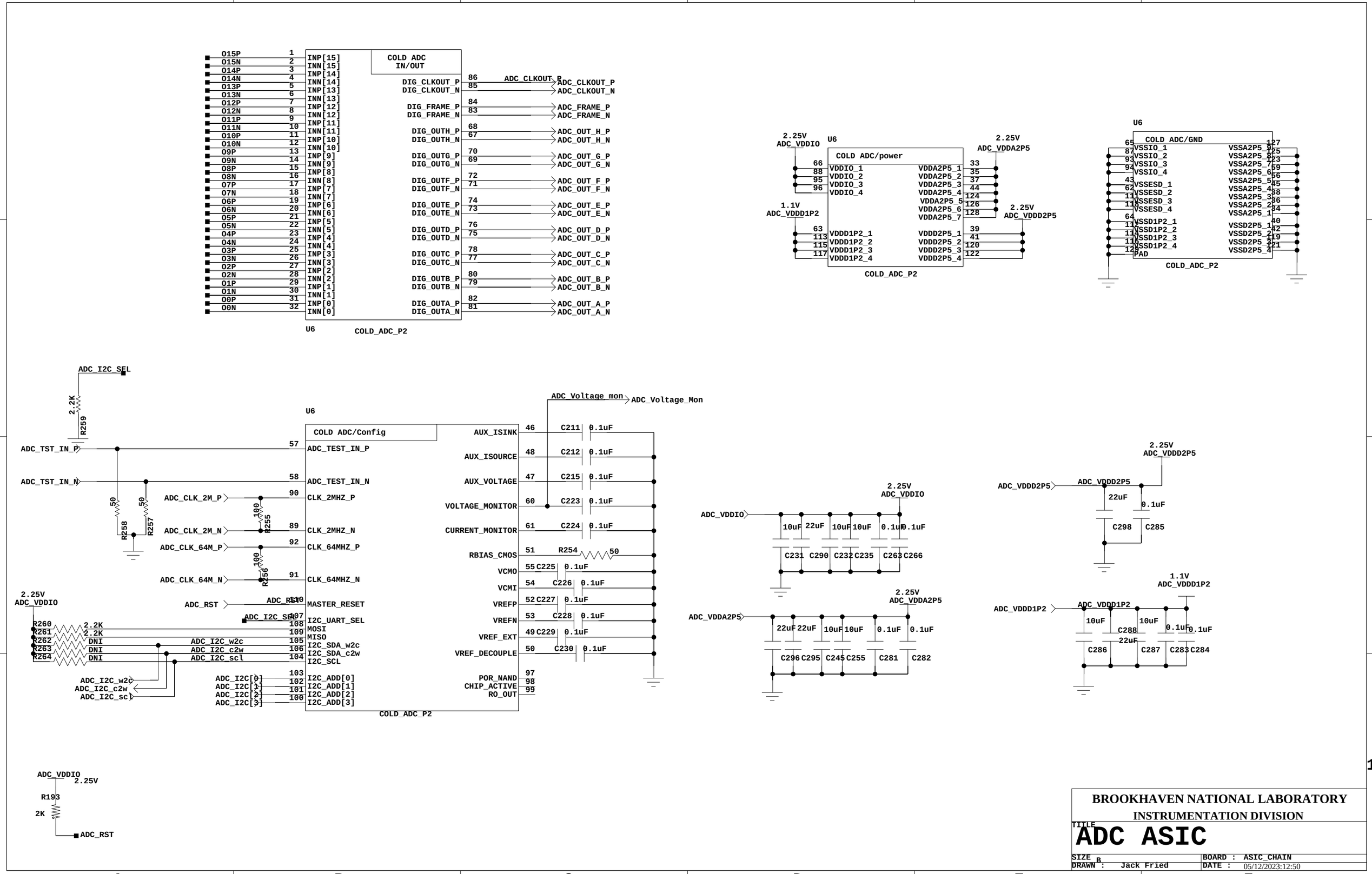

BROOKHAVEN NATIONAL LABORATORY
INSTRUMENTATION DIVISION

TITLE
ADC ASIC

SIZE B	BOARD : ASIC_CHAIN
DRAWN : Jack Fried	DATE : 05/12/2023:12:50

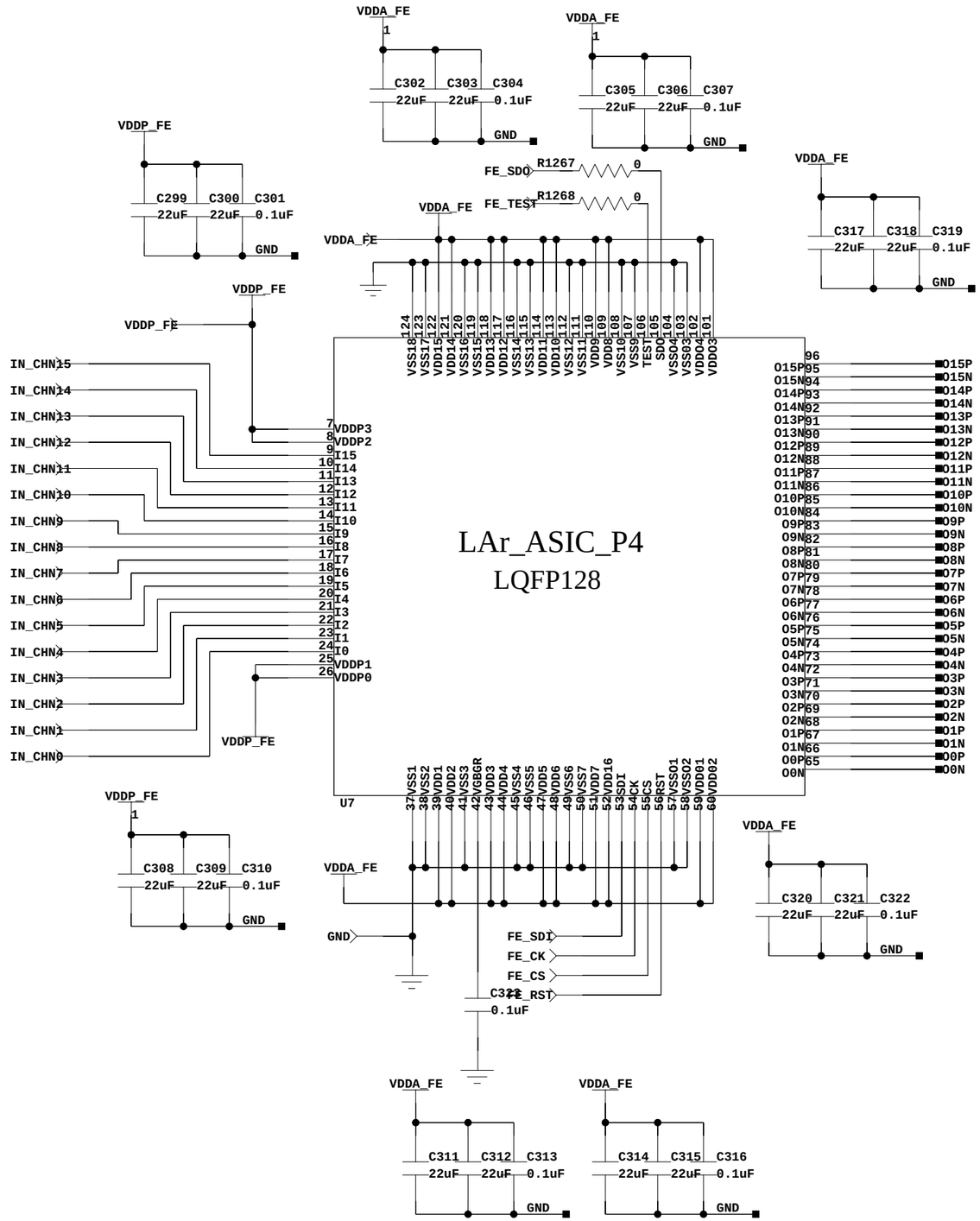

BROOKHAVEN NATIONAL LABORATORY
INSTRUMENTATION DIVISION

TITLE
FE ASIC

SIZE B	BOARD : ASIC_CHAIN
DRAWN : Jack Fried	DATE : 05/12/2023:11:32

@PRINTORDER=

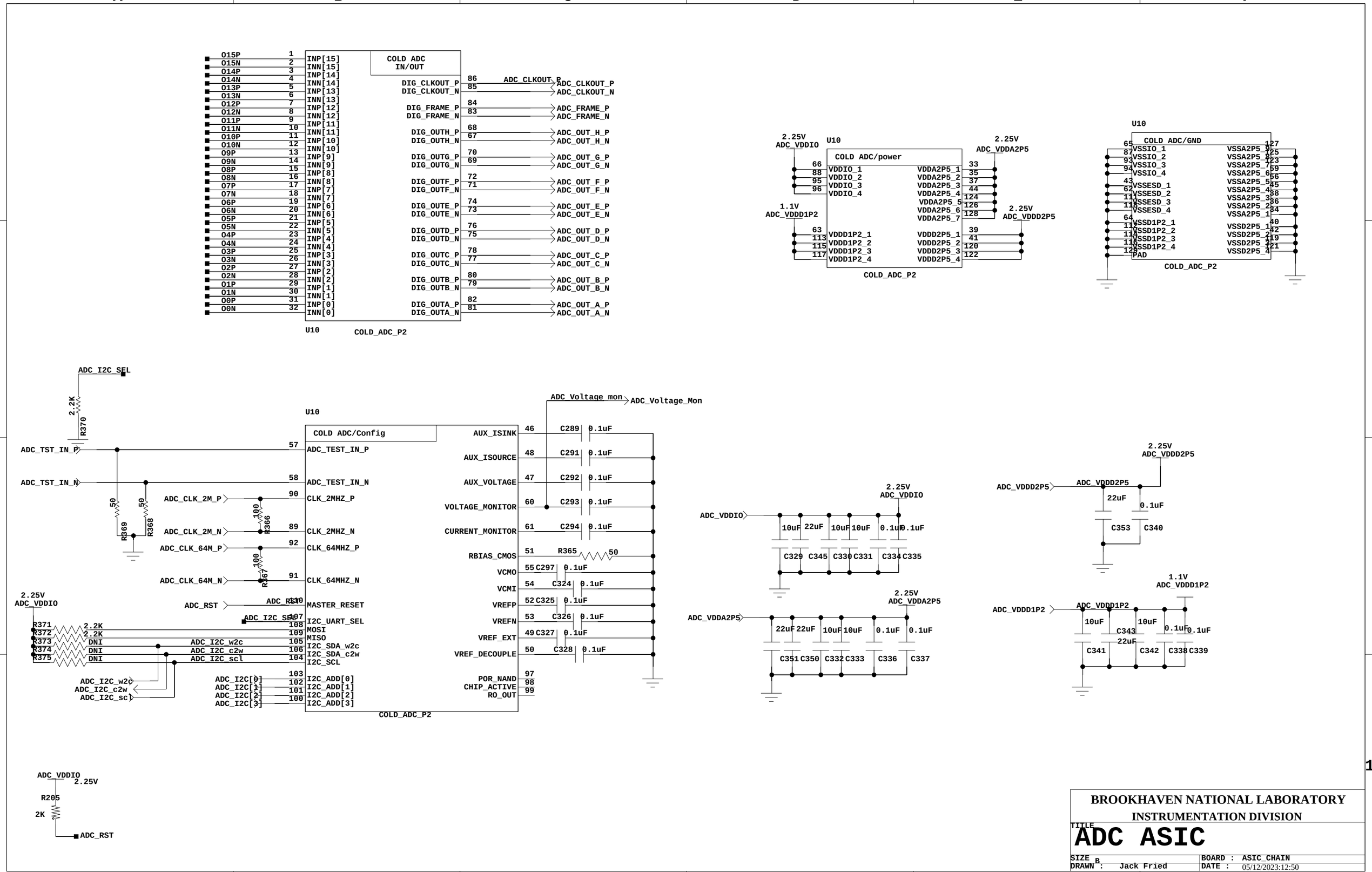

BROOKHAVEN NATIONAL LABORATORY
INSTRUMENTATION DIVISION

TITLE
ADC ASIC

SIZE B	BOARD : ASIC_CHAIN
DRAWN : Jack Fried	DATE : 05/12/2023:12:50

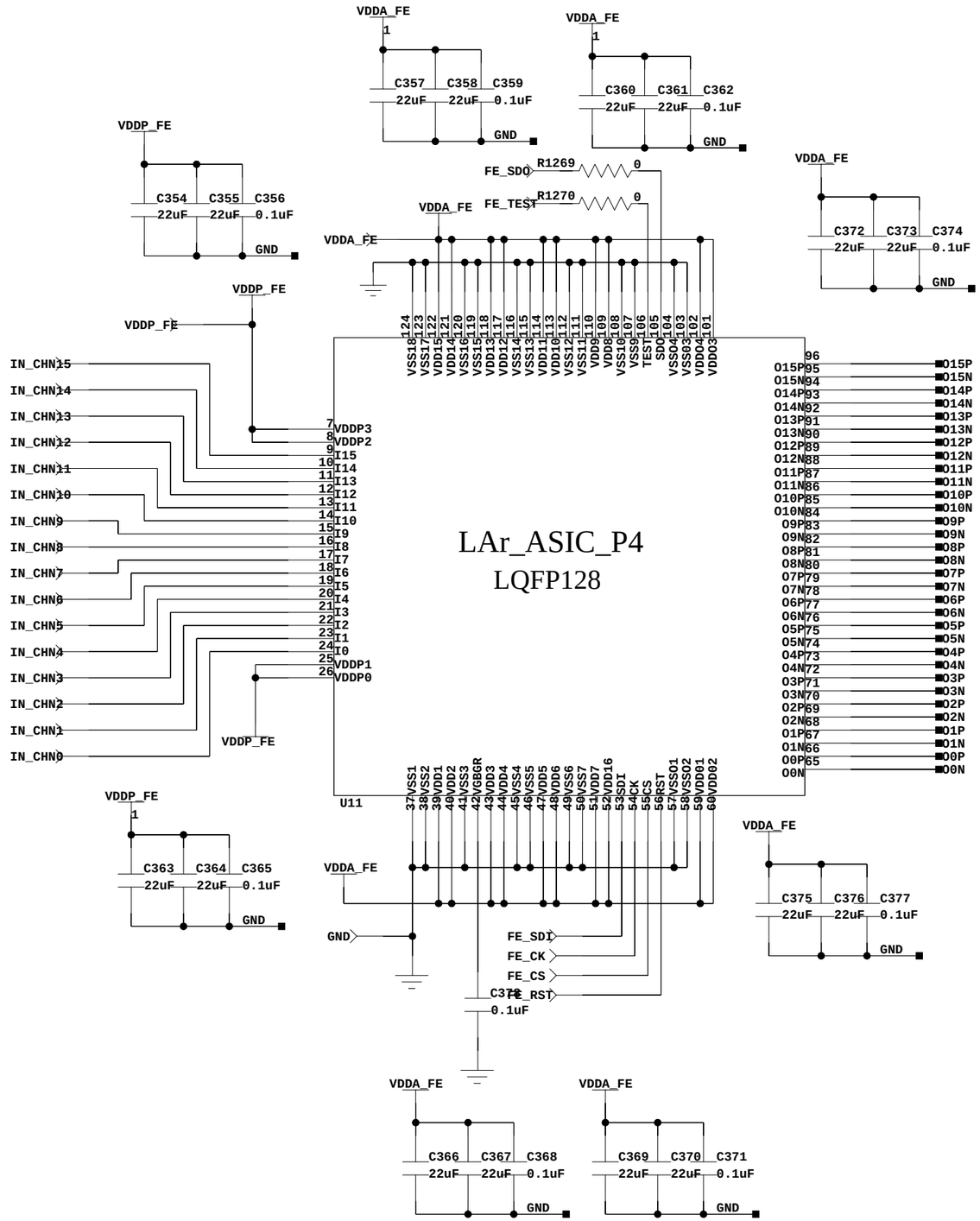

BROOKHAVEN NATIONAL LABORATORY
INSTRUMENTATION DIVISION

TITLE **FE ASIC**

SIZE B	BOARD : ASIC_CHAIN
DRAWN : Jack Fried	DATE : 05/12/2023:11:32

@PRINTORDER=

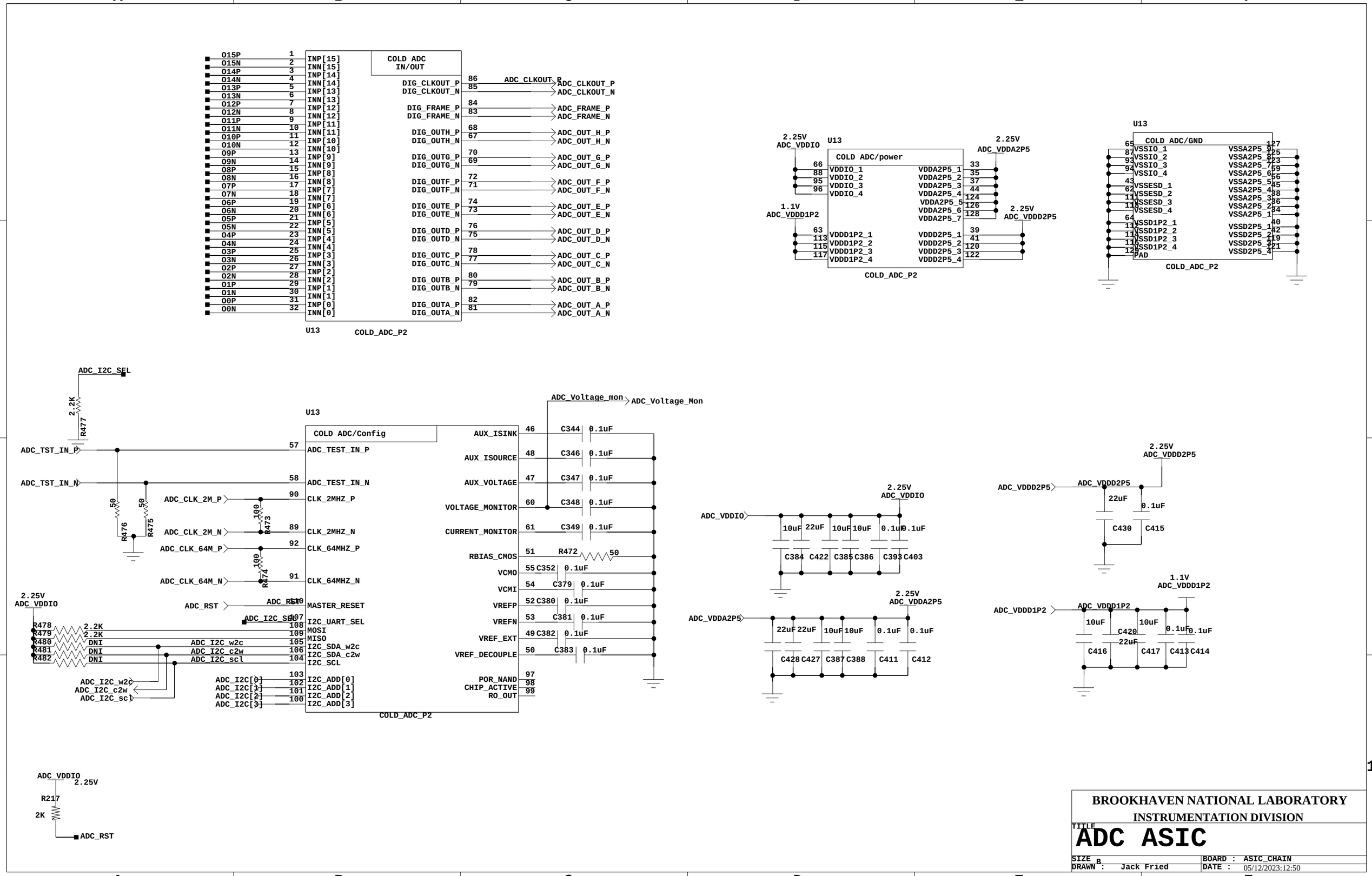

BROOKHAVEN NATIONAL LABORATORY
INSTRUMENTATION DIVISION

TITLE
ADC ASIC

SIZE B	BOARD : ASIC_CHAIN
DRAWN : Jack Fried	DATE : 05/12/2023:12:50

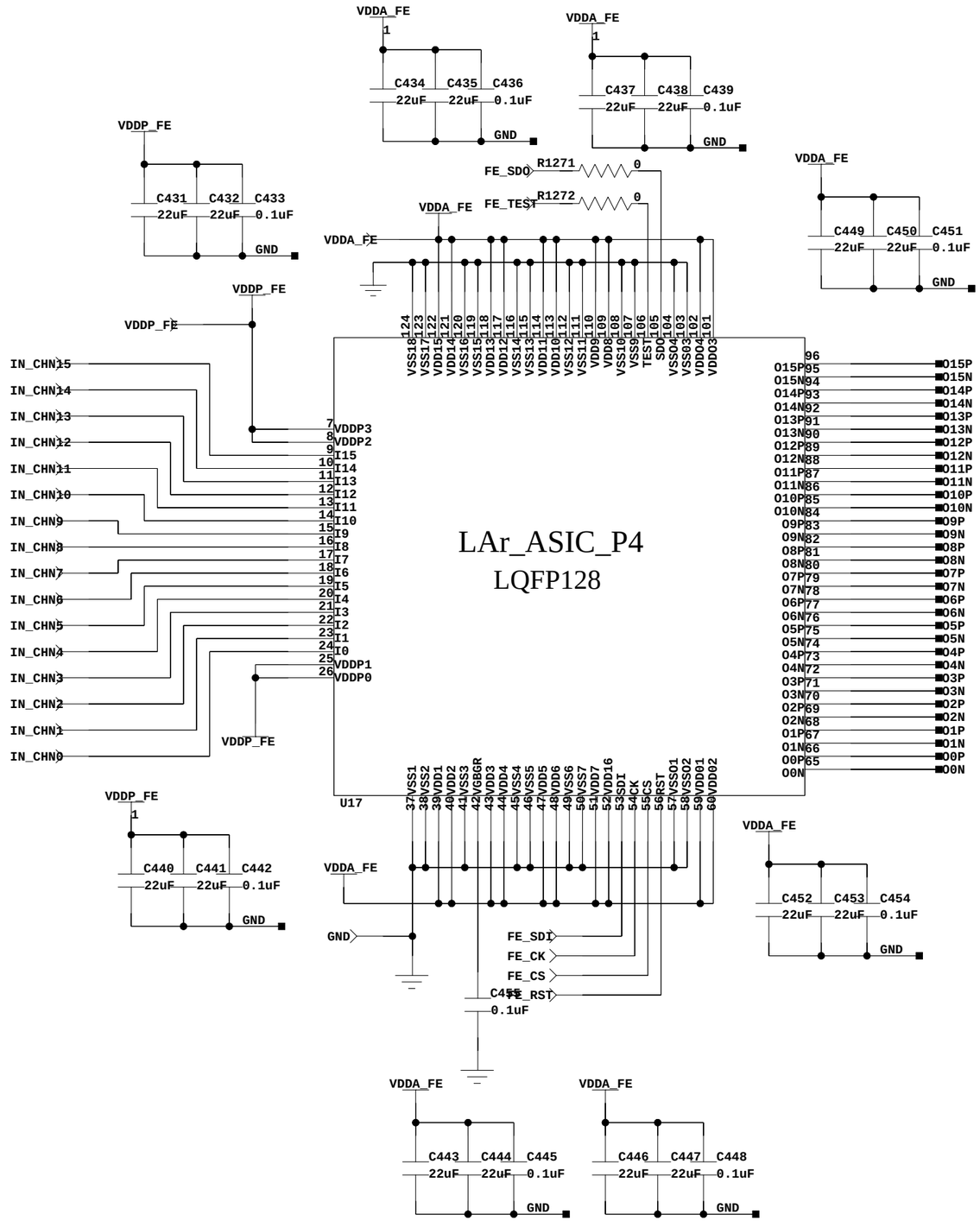

BROOKHAVEN NATIONAL LABORATORY
INSTRUMENTATION DIVISION

TITLE
FE ASIC

SIZE B	BOARD : ASIC_CHAIN
DRAWN : Jack Fried	DATE : 05/12/2023:11:32

@PRINTORDER=

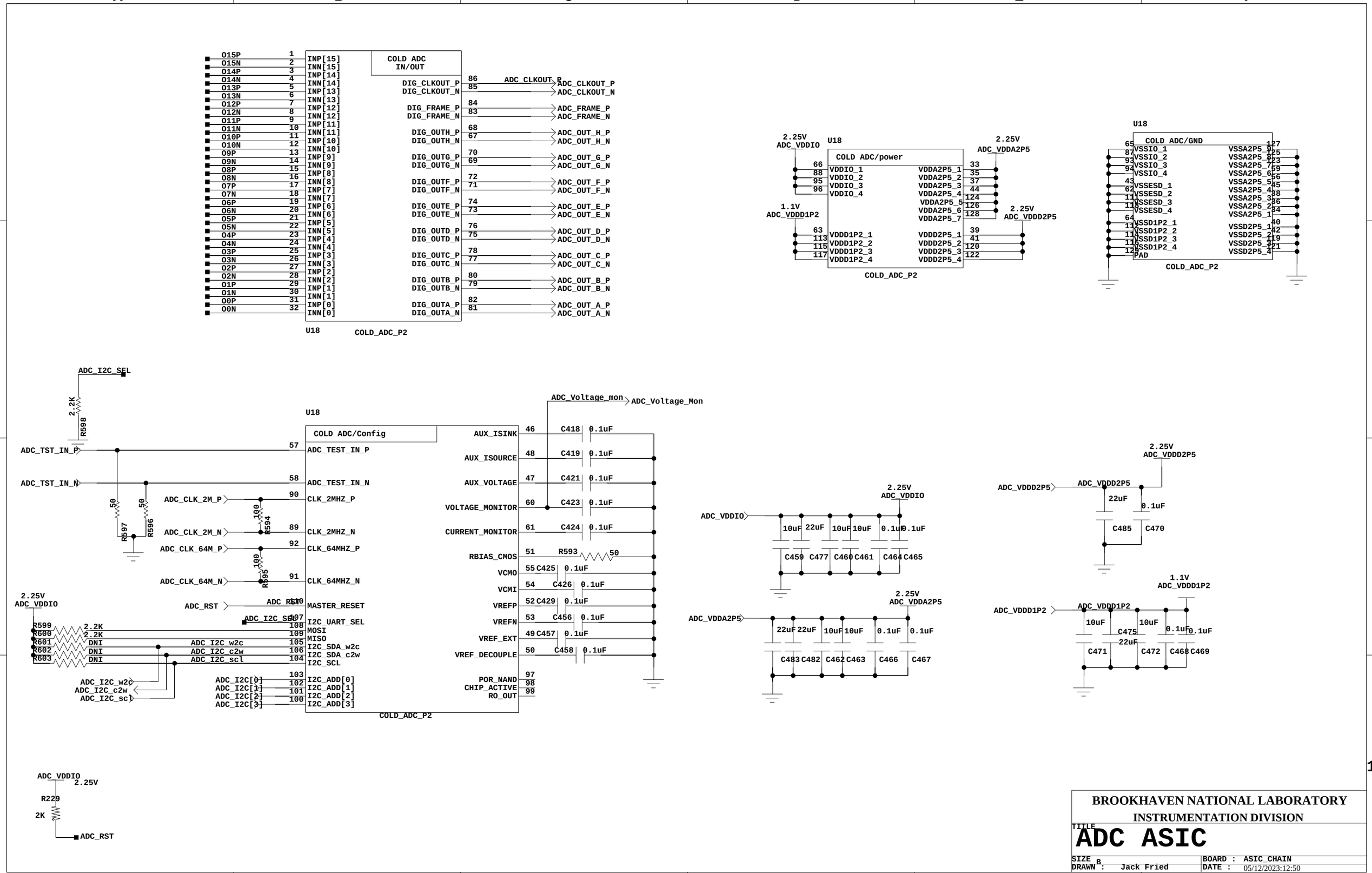

BROOKHAVEN NATIONAL LABORATORY
INSTRUMENTATION DIVISION

TITLE
ADC ASIC

SIZE B	BOARD : ASIC_CHAIN
DRAWN : Jack Fried	DATE : 05/12/2023:12:50

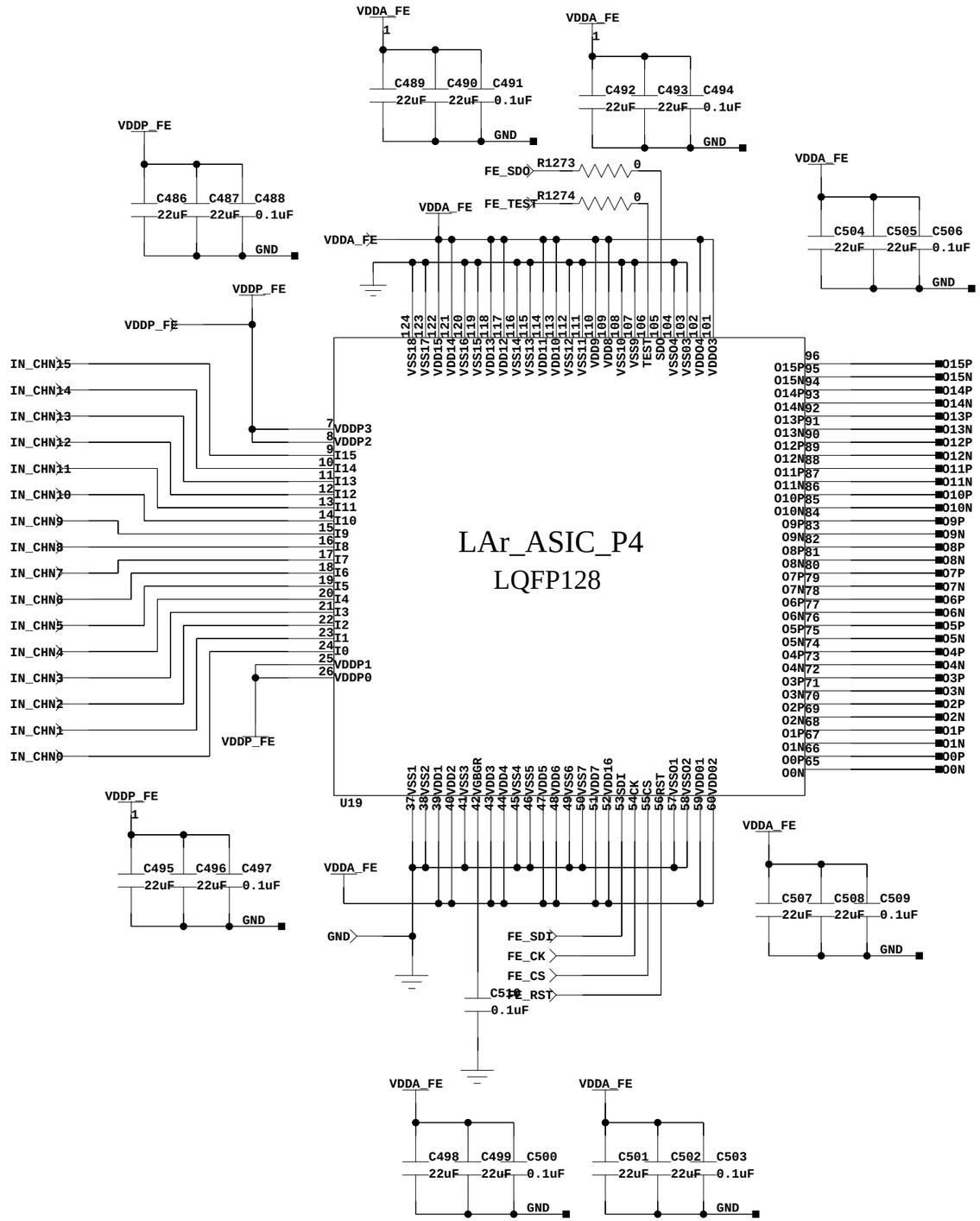

BROOKHAVEN NATIONAL LABORATORY
INSTRUMENTATION DIVISION

TITLE **FE ASIC**

SIZE B	BOARD : ASIC_CHAIN
DRAWN : Jack Fried	DATE : 05/12/2023:11:32

@PRINTORDER=

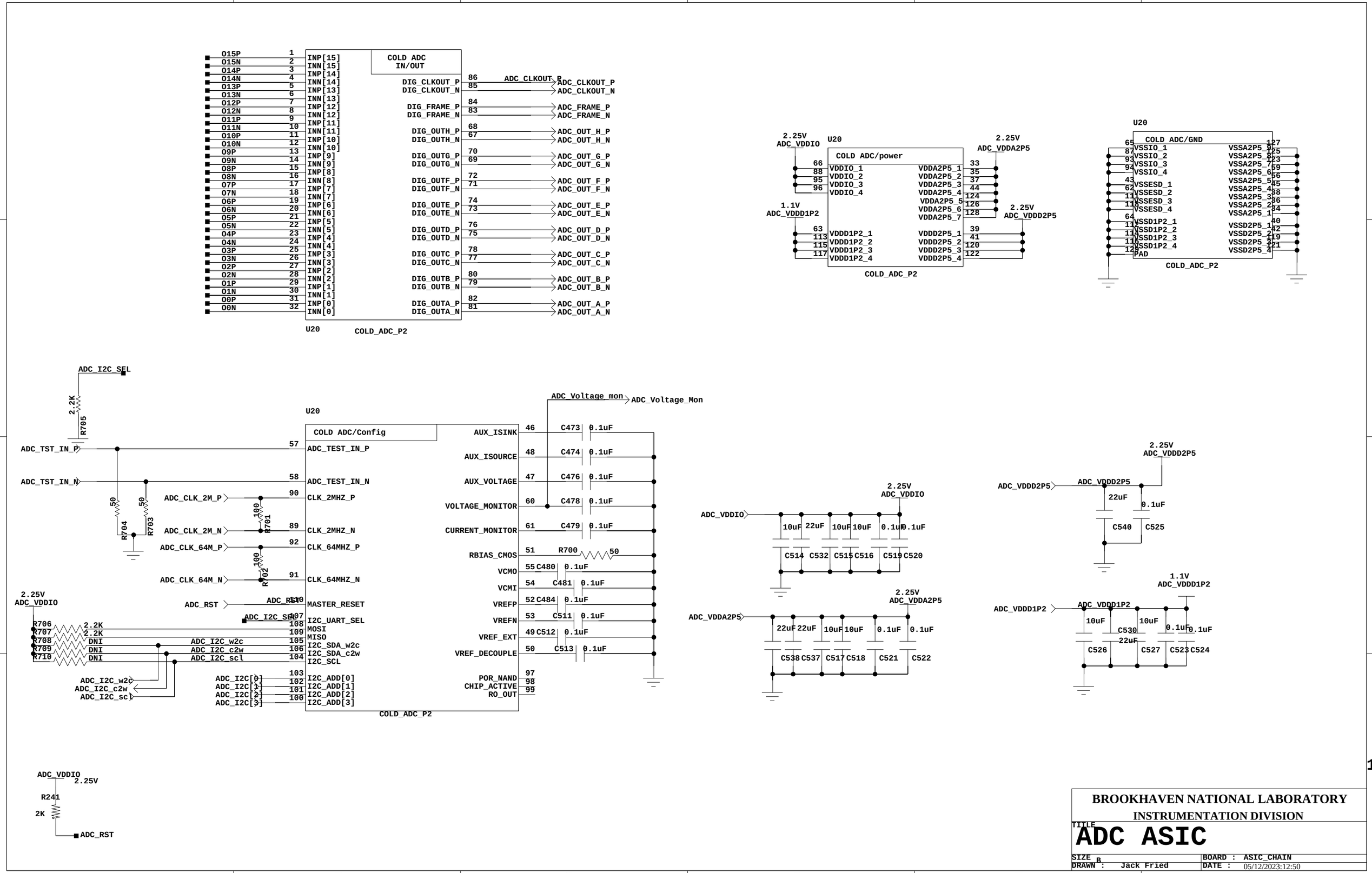

BROOKHAVEN NATIONAL LABORATORY	
INSTRUMENTATION DIVISION	
TITLE ADC ASIC	
SIZE B	BOARD : ASIC_CHAIN
DRAWN : Jack Fried	DATE : 05/12/2023:12:50

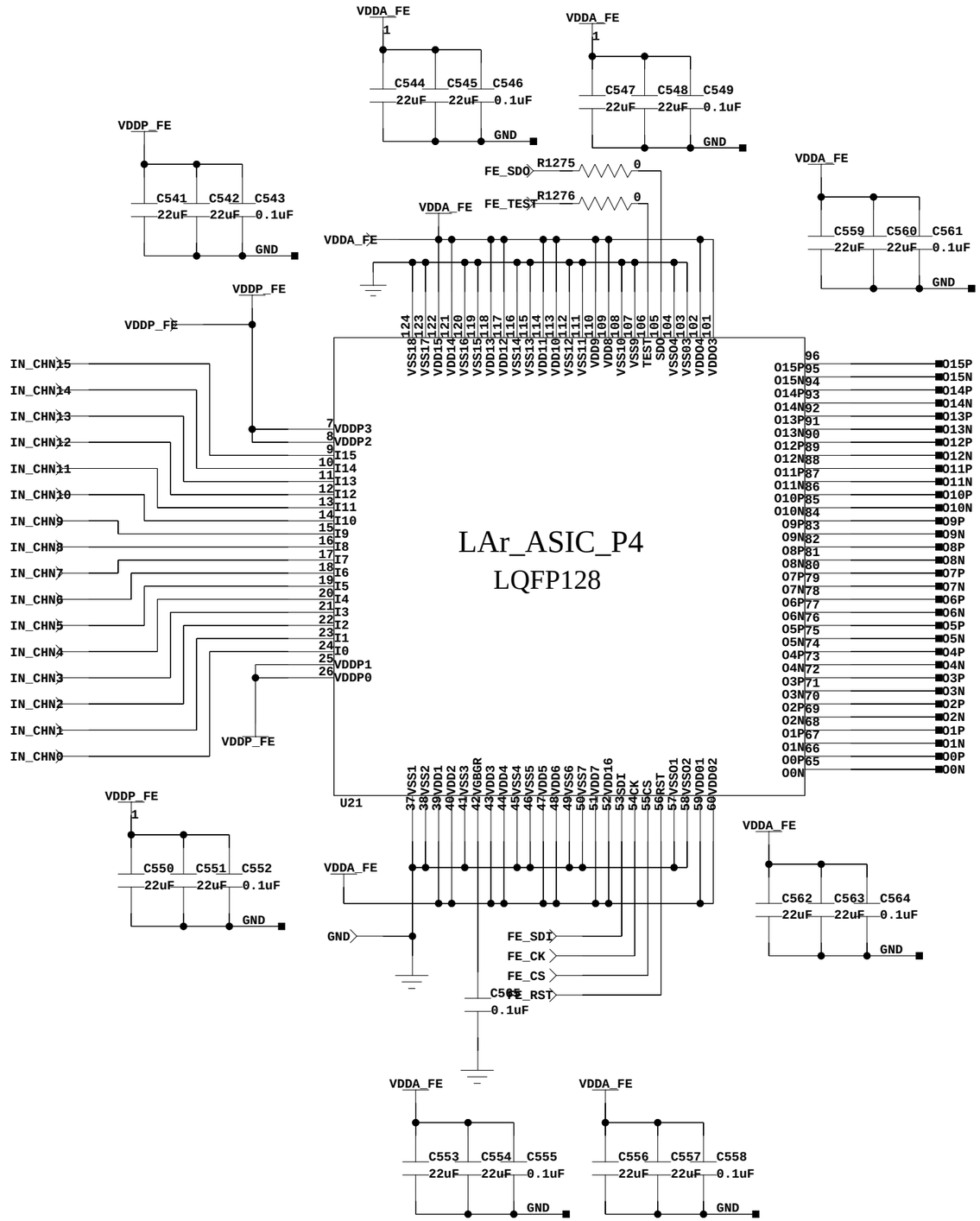

BROOKHAVEN NATIONAL LABORATORY
INSTRUMENTATION DIVISION

TITLE
FE ASIC

SIZE B	BOARD : ASIC_CHAIN
DRAWN : Jack Fried	DATE : 05/12/2023:11:32

@PRINTORDER=

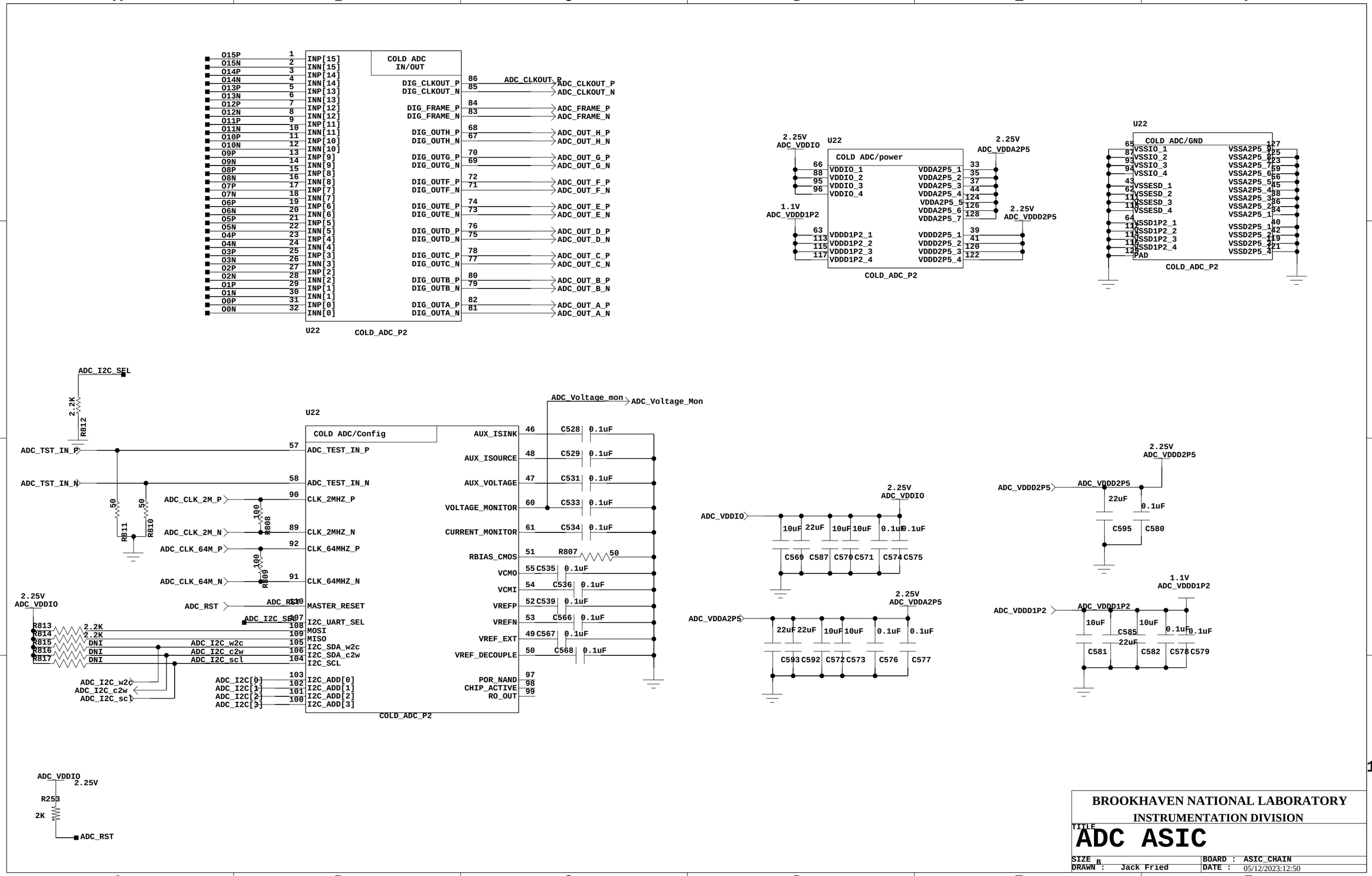
COLD ADC IN/OUT
U22
COLD_ADC_P2
ADC_CLKOUT_P
ADC_CLKOUT_N
ADC_FRAME_P
ADC_FRAME_N
ADC_OUT_H_P
ADC_OUT_H_N
ADC_OUT_G_P
ADC_OUT_G_N
ADC_OUT_F_P
ADC_OUT_F_N
ADC_OUT_E_P
ADC_OUT_E_N
ADC_OUT_D_P
ADC_OUT_D_N
ADC_OUT_C_P
ADC_OUT_C_N
ADC_OUT_B_P
ADC_OUT_B_N
ADC_OUT_A_P
ADC_OUT_A_N
COLD ADC/power
2.25V ADC_VDDIO
2.25V ADC_VDDA2P5
1.1V ADC_VDDD1P2
2.25V ADC_VDDD2P5
COLD ADC/GND
COLD ADC/Config
ADC_I2C_SEL
ADC_TST_IN_P
ADC_TST_IN_N
ADC_CLK_2M_P
ADC_CLK_2M_N
ADC_CLK_64M_P
ADC_CLK_64M_N
ADC_RST
ADC_I2C_w2c
ADC_I2C_c2w
ADC_I2C_scl
ADC_Voltage_mon
ADC_Voltage_Mon
AUX_ISINK
AUX_ISOURCE
AUX_VOLTAGE
VOLTAGE_MONITOR
CURRENT_MONITOR
RBIAS_CMOS
VCMO
VCMI
VREFP
VREFN
VREF_EXT
VREF_DECOUPLE
POR_NAND
CHIP_ACTIVE
RO_OUT
ADC_VDDIO
ADC_VDDD2P5
ADC_VDDA2P5
ADC_VDDD1P2
BROOKHAVEN NATIONAL LABORATORY
INSTRUMENTATION DIVISION
TITLE
ADC ASIC
SIZE B
BOARD : ASIC_CHAIN
DRAWN : Jack Fried
DATE : 05/12/2023:12:50

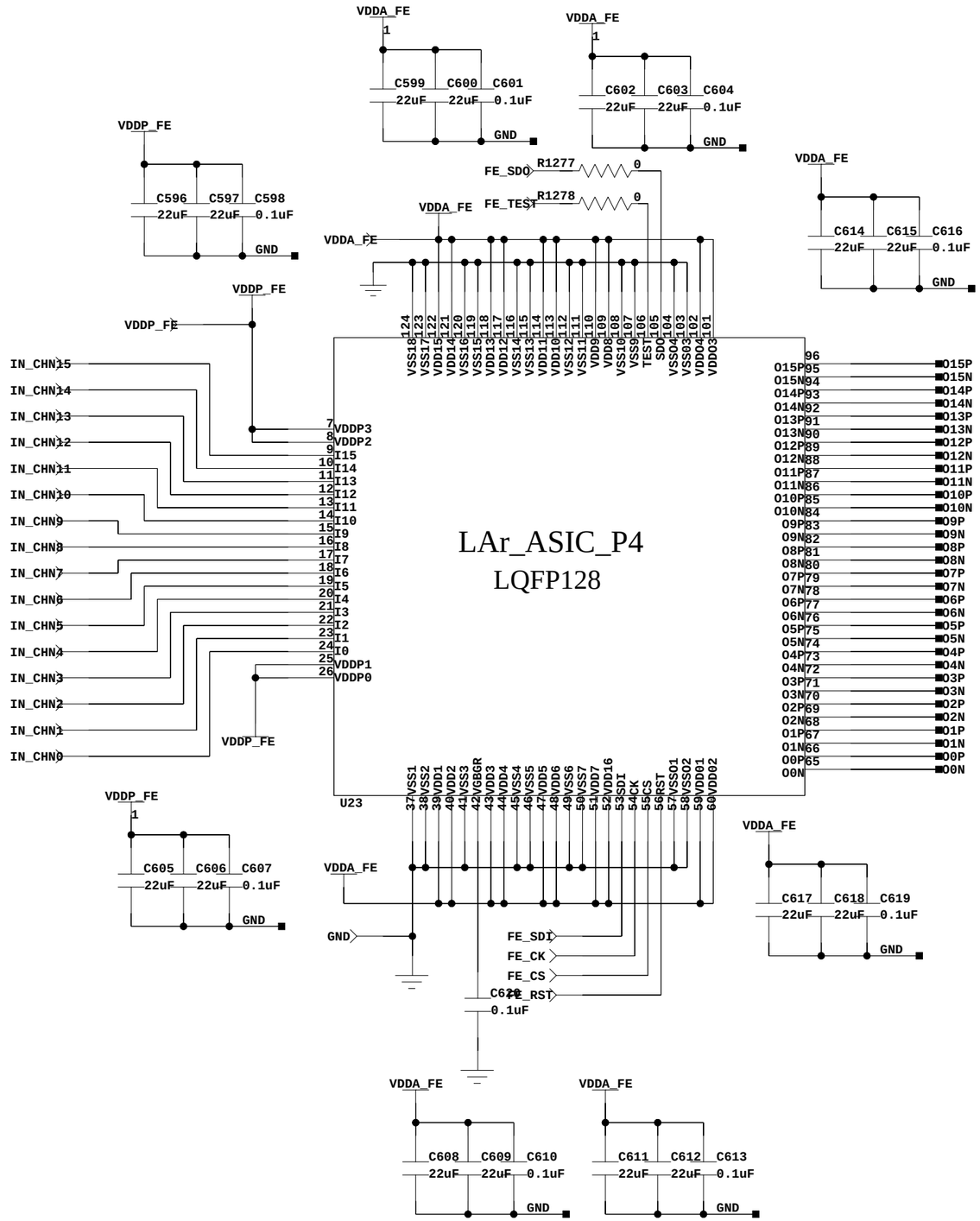

BROOKHAVEN NATIONAL LABORATORY
INSTRUMENTATION DIVISION

TITLE
FE ASIC

SIZE B	BOARD : ASIC_CHAIN
DRAWN : Jack Fried	DATE : 05/12/2023:11:32

@PRINTORDER=

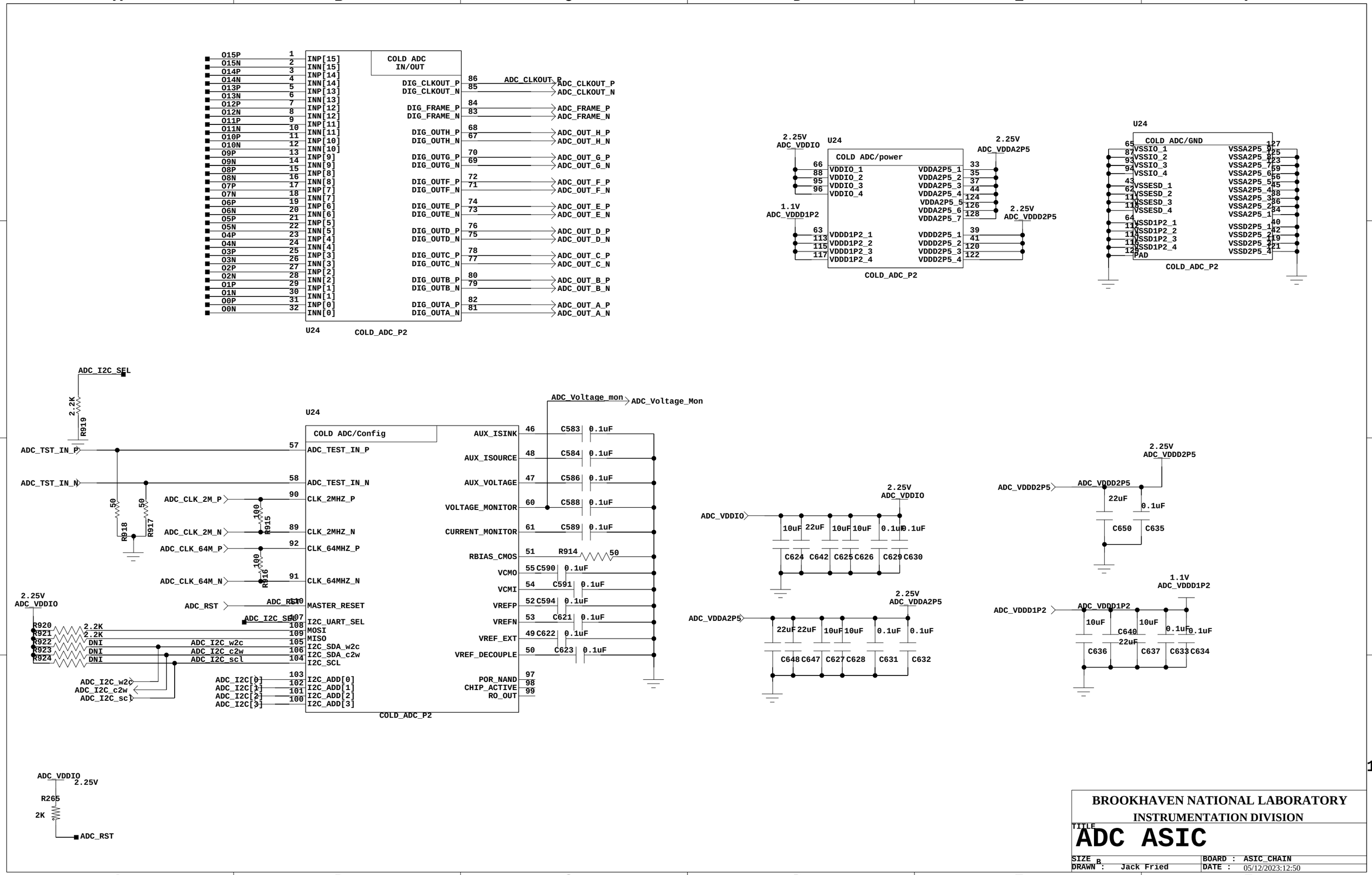

BROOKHAVEN NATIONAL LABORATORY
INSTRUMENTATION DIVISION

TITLE
ADC ASIC

SIZE B	BOARD : ASIC_CHAIN
DRAWN : Jack Fried	DATE : 05/12/2023:12:50

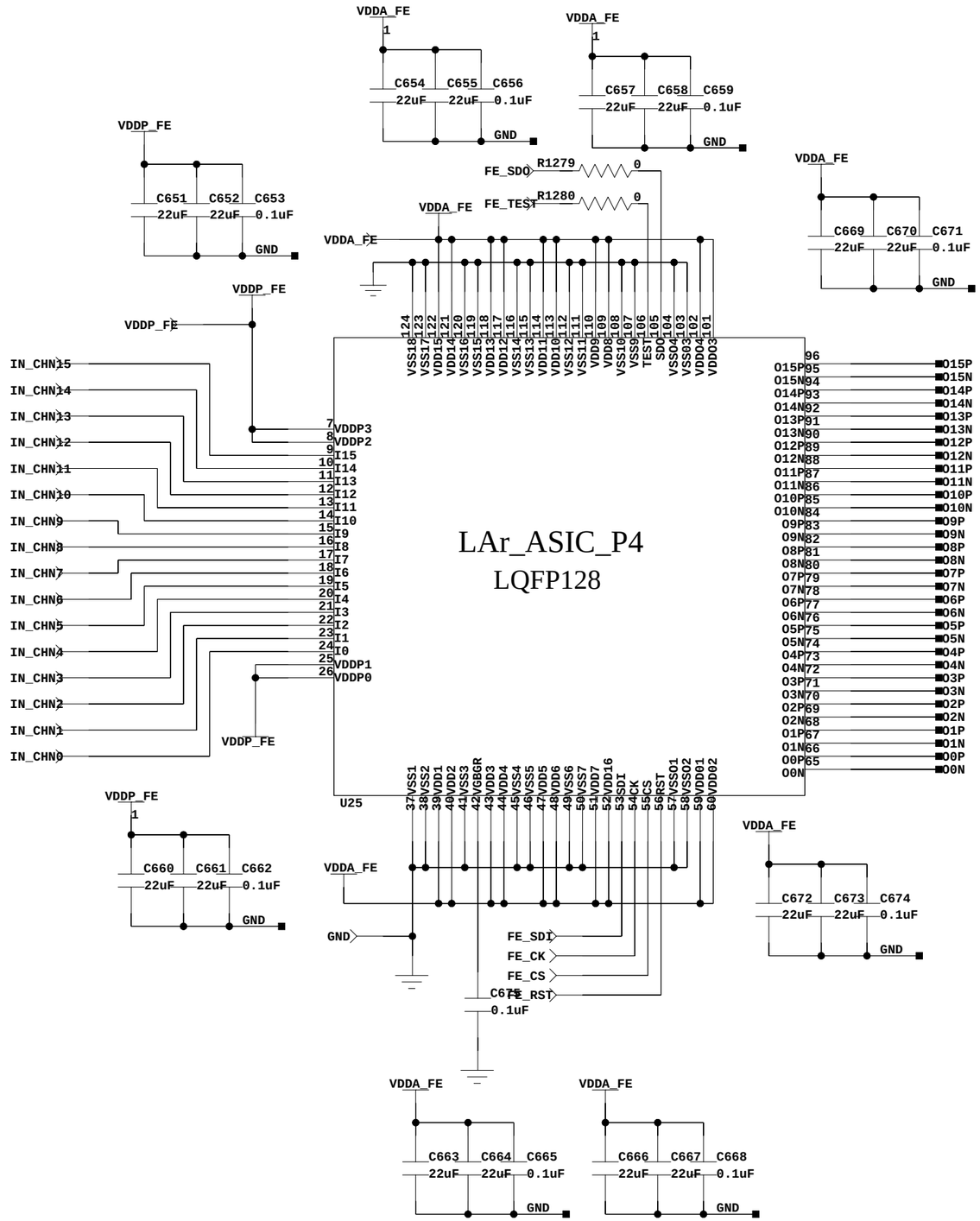

BROOKHAVEN NATIONAL LABORATORY
INSTRUMENTATION DIVISION

TITLE **FE ASIC**

SIZE B	BOARD : ASIC_CHAIN
DRAWN : Jack Fried	DATE : 05/12/2023:11:32

@PRINTORDER=

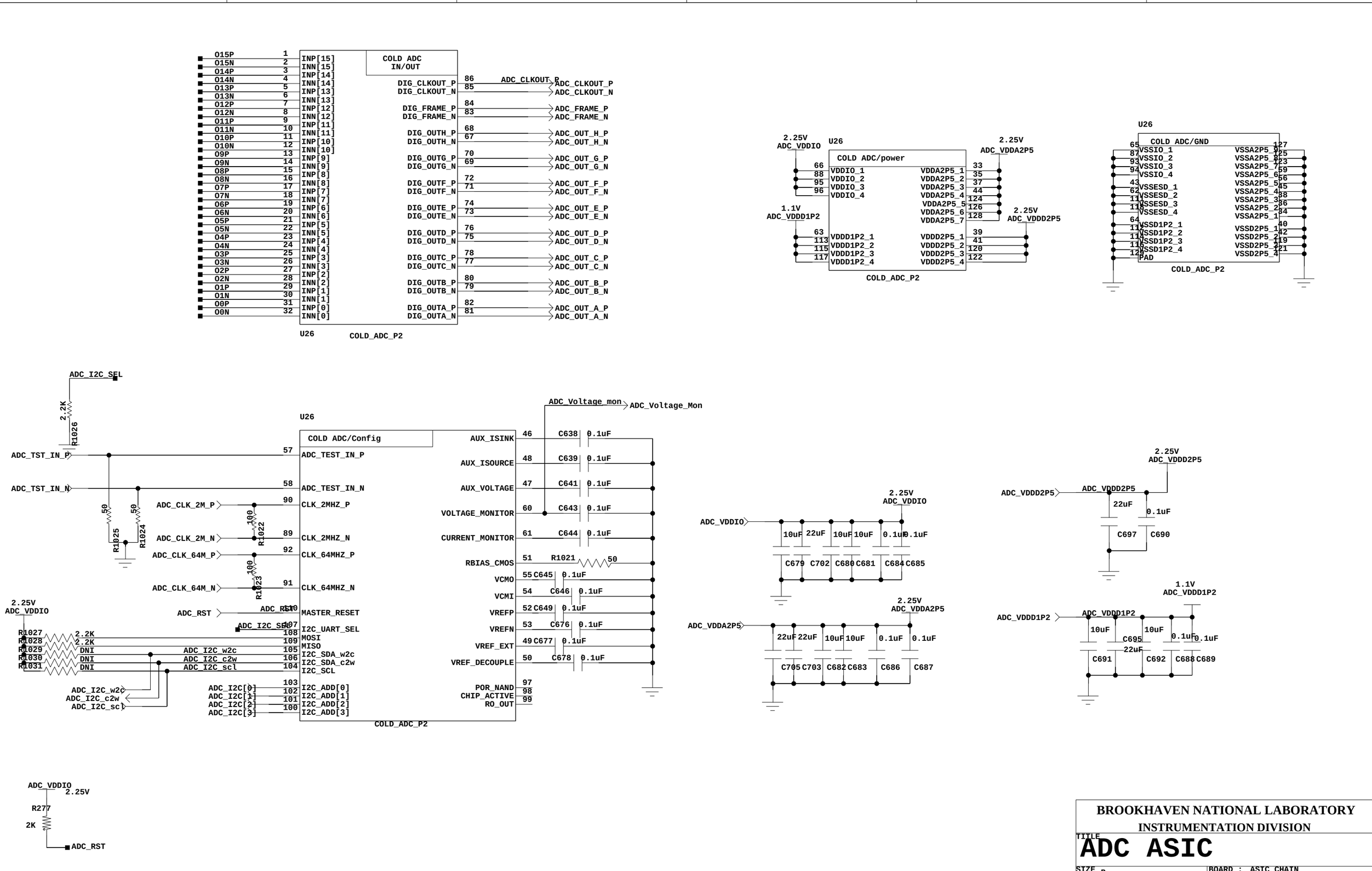
COLD ADC IN/OUT
COLD ADC/power
COLD ADC/GND
COLD ADC/Config
U26
COLD_ADC_P2
ADC_CLKOUT_P
ADC_CLKOUT_N
ADC_FRAME_P
ADC_FRAME_N
ADC_OUT_H_P
ADC_OUT_H_N
ADC_OUT_G_P
ADC_OUT_G_N
ADC_OUT_F_P
ADC_OUT_F_N
ADC_OUT_E_P
ADC_OUT_E_N
ADC_OUT_D_P
ADC_OUT_D_N
ADC_OUT_C_P
ADC_OUT_C_N
ADC_OUT_B_P
ADC_OUT_B_N
ADC_OUT_A_P
ADC_OUT_A_N
2.25V ADC_VDDIO
2.25V ADC_VDDA2P5
1.1V ADC_VDDD1P2
2.25V ADC_VDDD2P5
ADC_I2C_SEL
ADC_Voltage_mon
ADC_Voltage_Mon
ADC_TST_IN_P
ADC_TST_IN_N
ADC_CLK_2M_P
ADC_CLK_2M_N
ADC_CLK_64M_P
ADC_CLK_64M_N
ADC_RST
ADC_I2C_w2c
ADC_I2C_c2w
ADC_I2C_scl
ADC_I2C[0]
ADC_I2C[1]
ADC_I2C[2]
ADC_I2C[3]
AUX_ISINK
AUX_ISOURCE
AUX_VOLTAGE
VOLTAGE_MONITOR
CURRENT_MONITOR
RBIAS_CMOS
VCMO
VCMI
VREFP
VREFN
VREF_EXT
VREF_DECOUPLE
POR_NAND
CHIP_ACTIVE
RO_OUT
ADC_VDDIO
ADC_VDDA2P5
ADC_VDDD2P5
ADC_VDDD1P2
BROOKHAVEN NATIONAL LABORATORY
INSTRUMENTATION DIVISION
TITLE
ADC ASIC
SIZE B
BOARD : ASIC_CHAIN
DRAWN : Jack Fried
DATE : 05/12/2023:12:50

LVDS TERMINATION

Place next to coldata ASIC

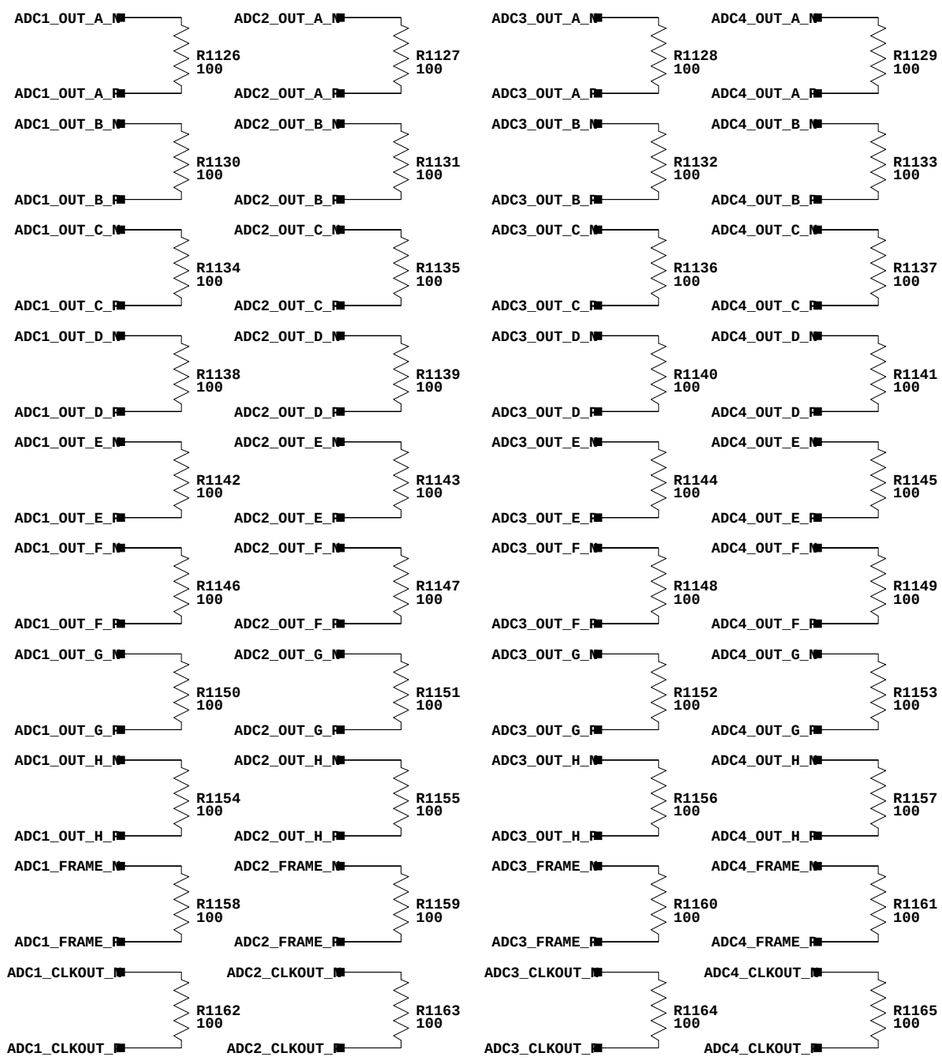

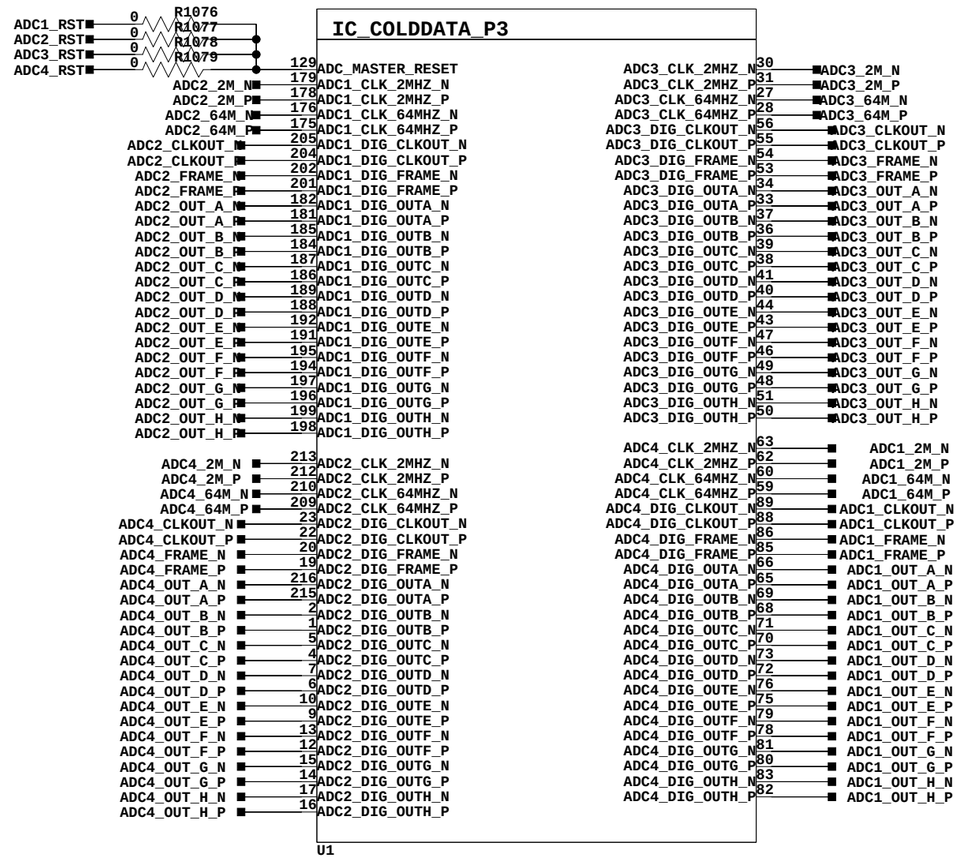

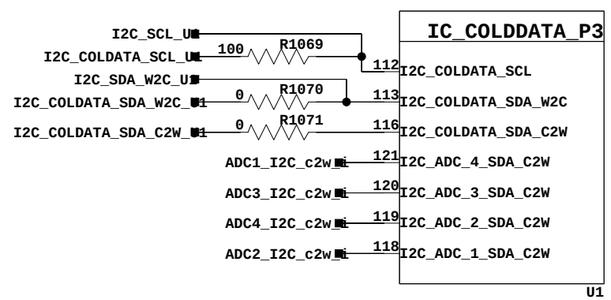

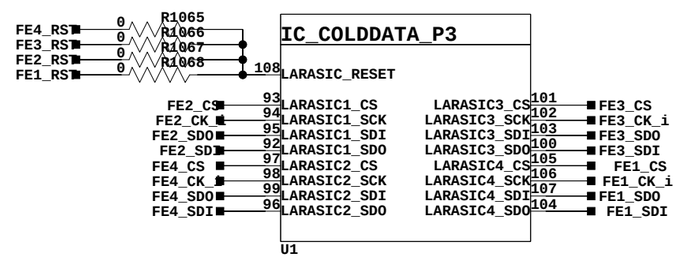

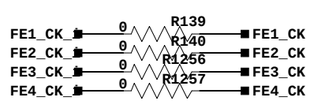

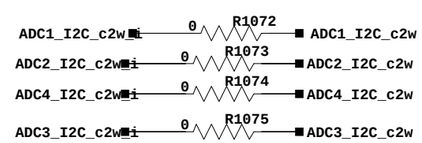

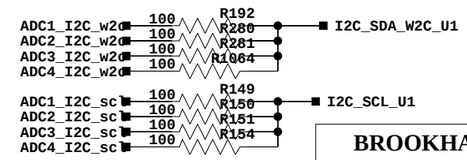

BROOKHAVEN NATIONAL LABORATORY

INSTRUMENTATION DIVISION

TITLE **CDM TERM L and ASIC IO**

SIZE B	BOARD : COLDATA Mezzanine
DRAWN : Jack Fried	DATE : 06/07/2022:11:49

LVDS TERMINATION

Place next to coldata ASIC

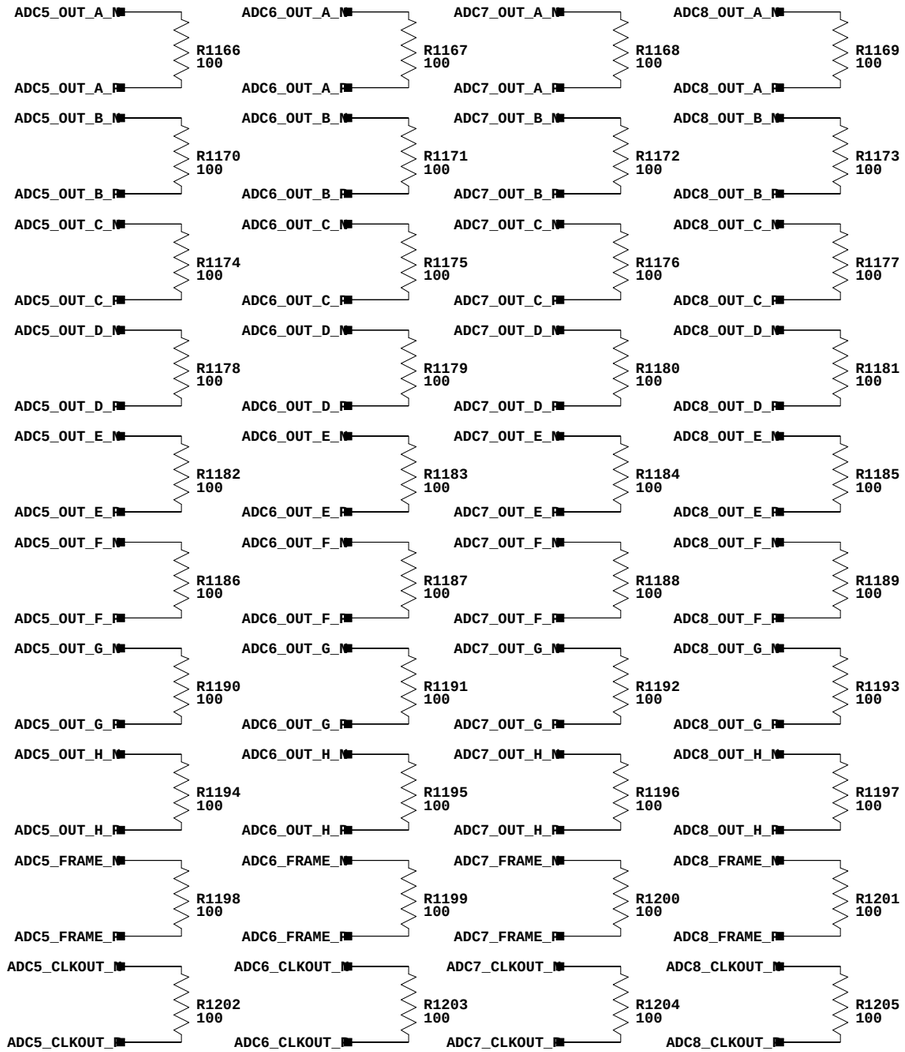

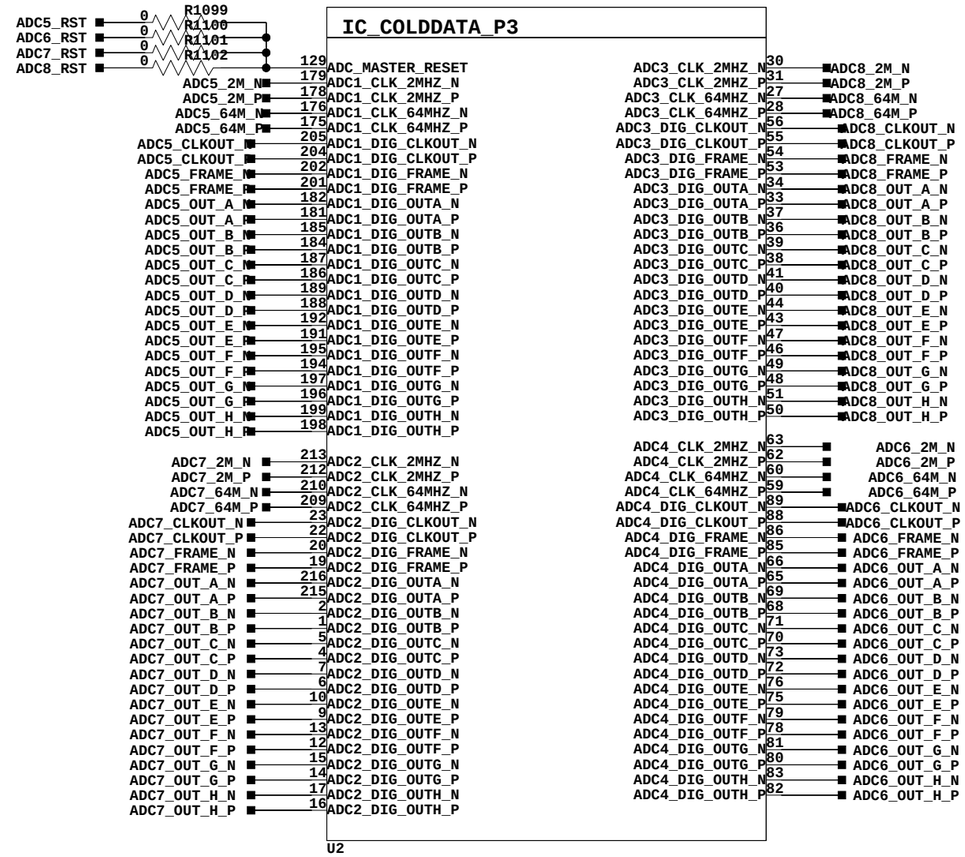

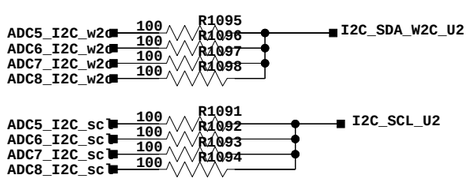

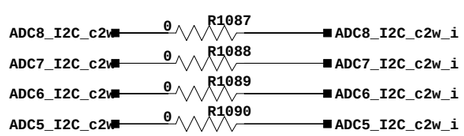

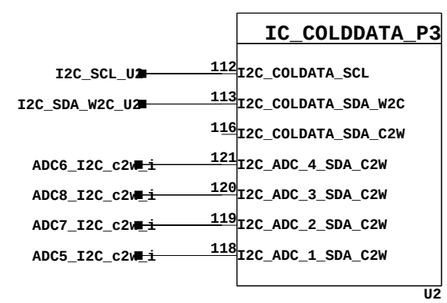

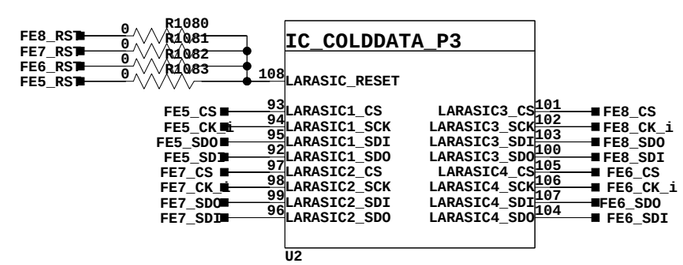

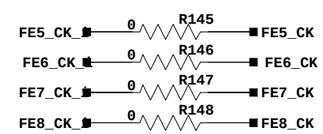

BROOKHAVEN NATIONAL LABORATORY

INSTRUMENTATION DIVISION

TITLE **CDM TERM R and ASIC IO**

SIZE B	BOARD : COLDATA Mezzanine
DRAWN : Jack Fried	DATE : 06/07/2022:11:49

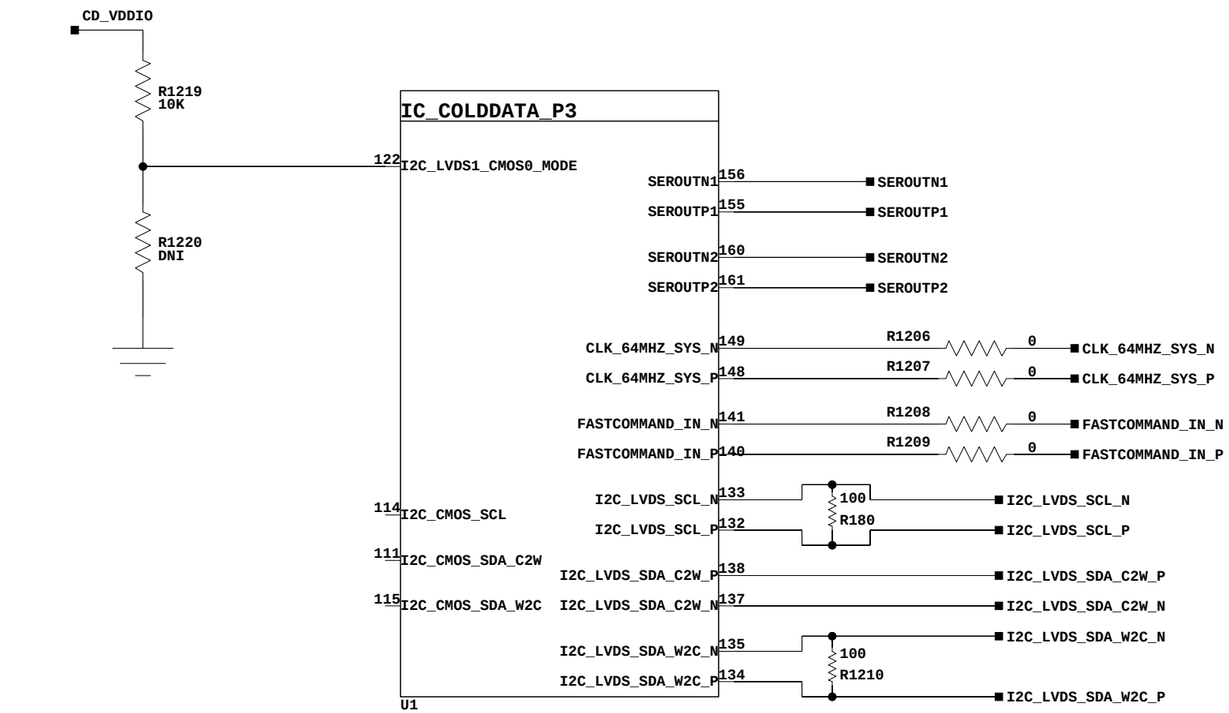

Minisas to WIB

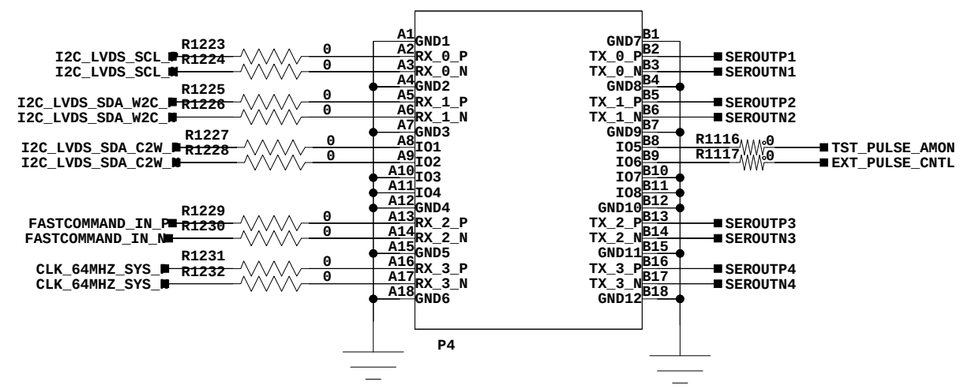

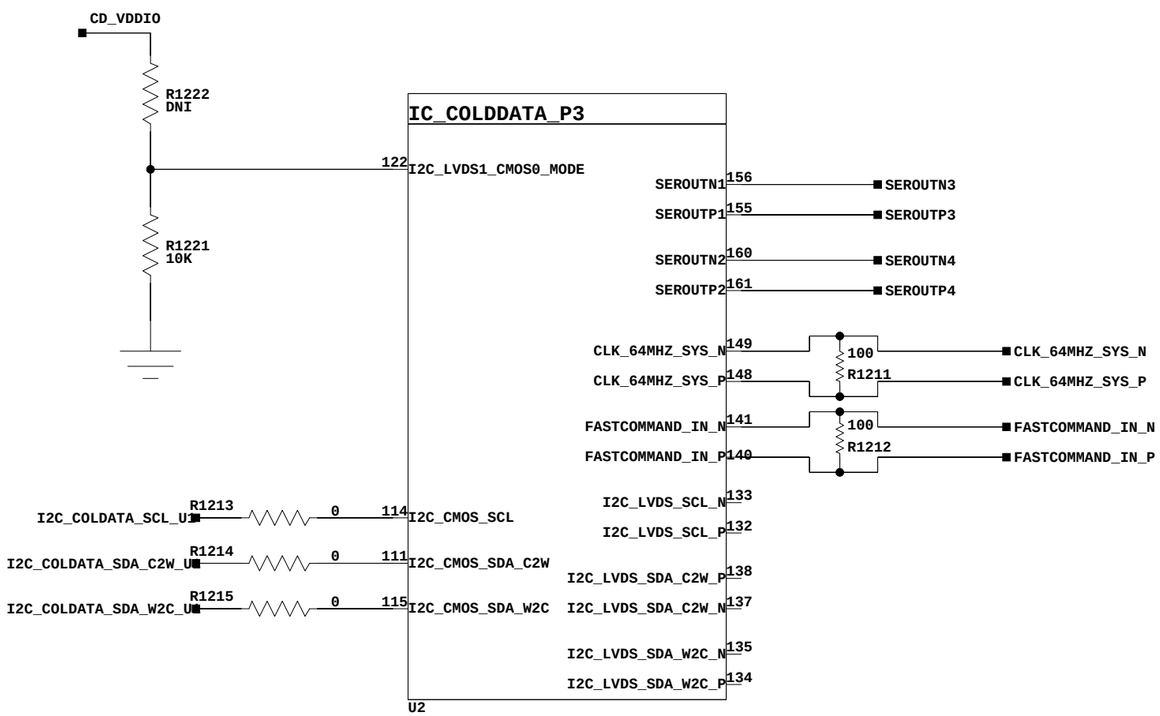

BROOKHAVEN NATIONAL LABORATORY
INSTRUMENTATION DIVISION

TITLE
CDM WIB interface

SIZE B	BOARD : COLDATA Mezzanine
DRAWN : Jack Fried	DATE : 06/07/2022:11:49

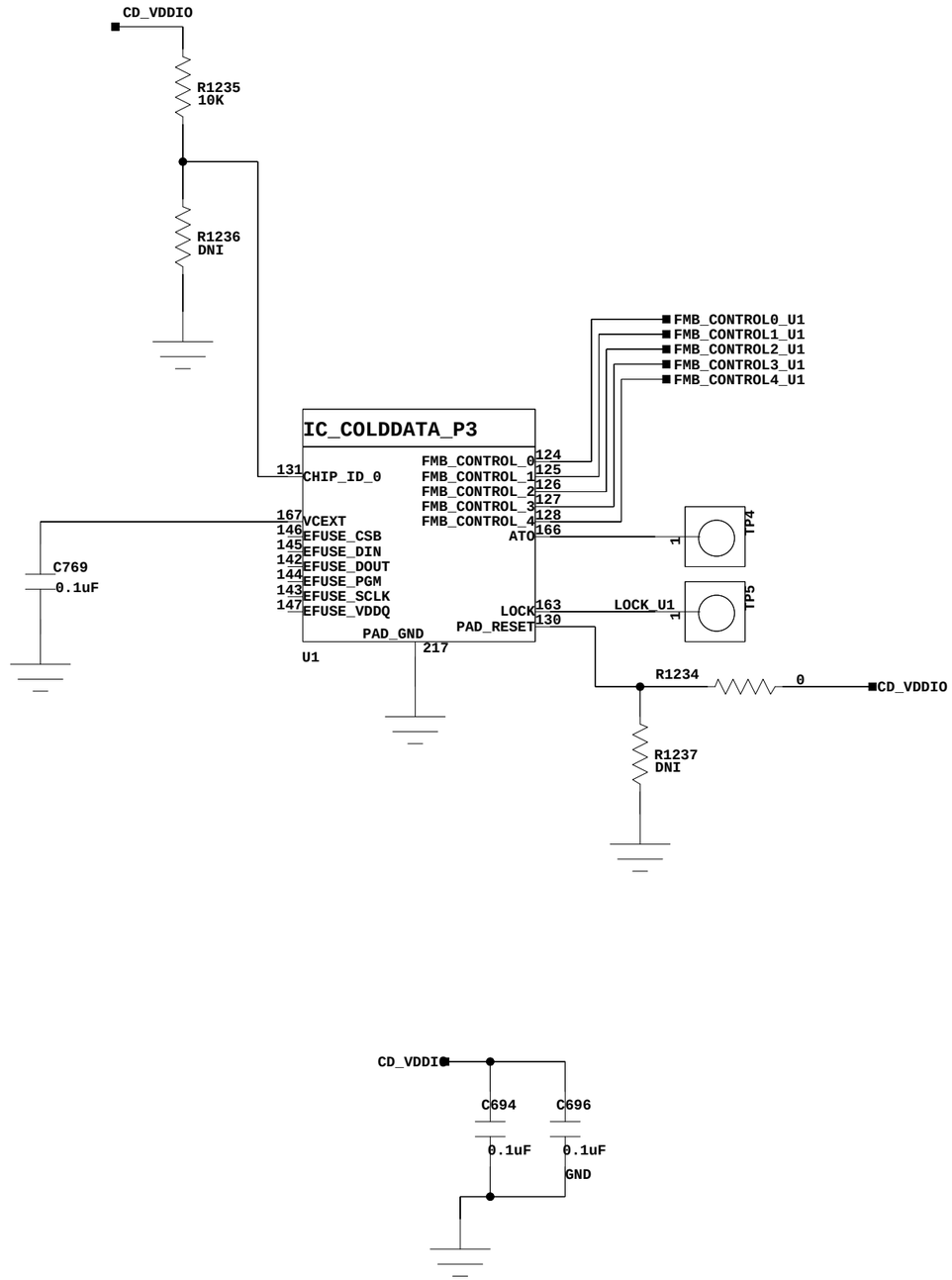

BROOKHAVEN NATIONAL LABORATORY
INSTRUMENTATION DIVISION

TITLE
CDM Left msic io

SIZE B	BOARD : COLDATA Mezzanine
DRAWN : Jack Fried	DATE : 06/07/2022:11:49

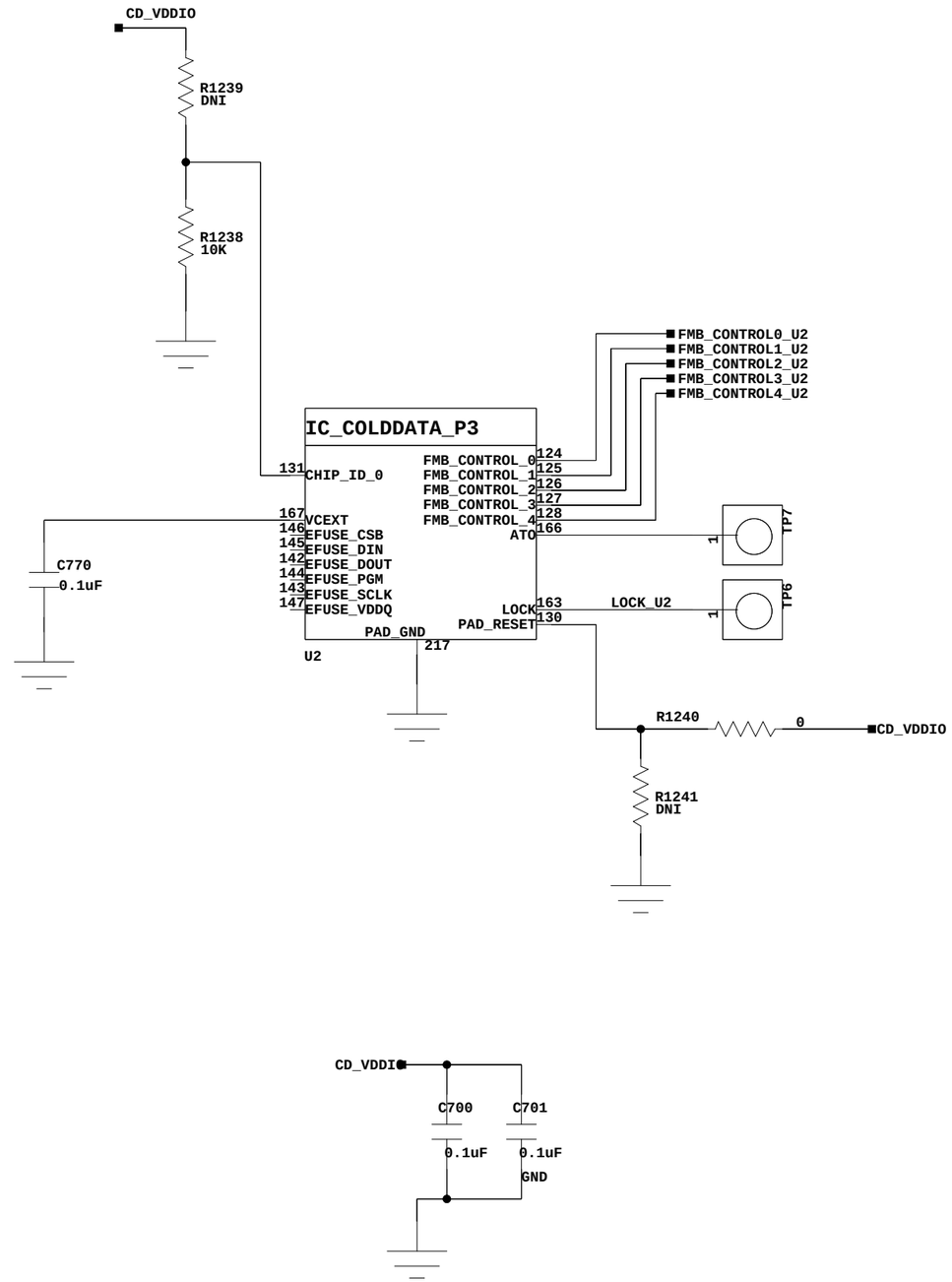

BROOKHAVEN NATIONAL LABORATORY
INSTRUMENTATION DIVISION

TITLE
CDM Right misc io

SIZE B	BOARD : COLDATA Mezzanine
DRAWN : Jack Fried	DATE : 06/07/2022:11:49

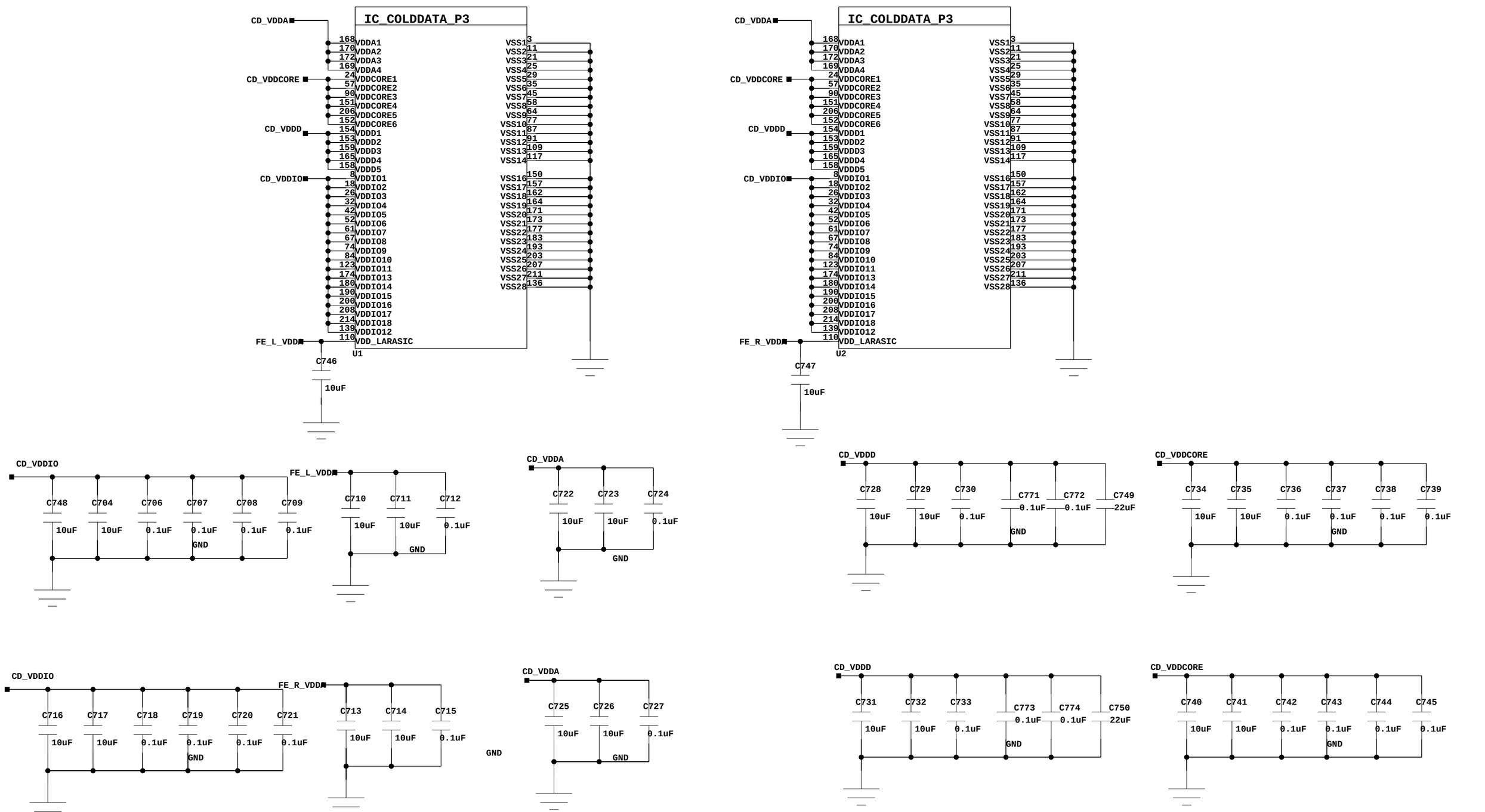

BROOKHAVEN NATIONAL LABORATORY
INSTRUMENTATION DIVISION

TITLE
CDM ASIC power IO

SIZE B	BOARD : COLDATA Mezzanine
DRAWN : Jack Fried	DATE : 06/07/2022:11:49

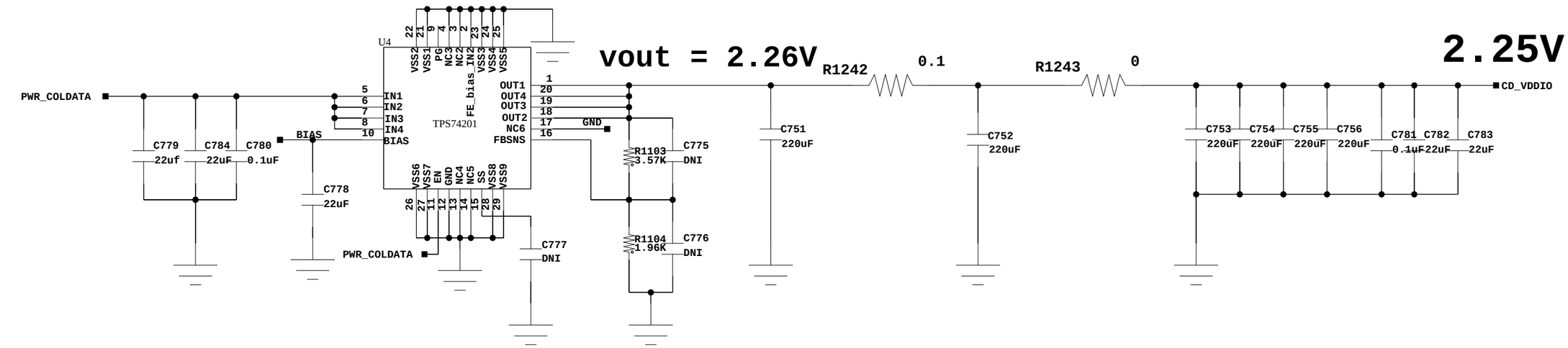

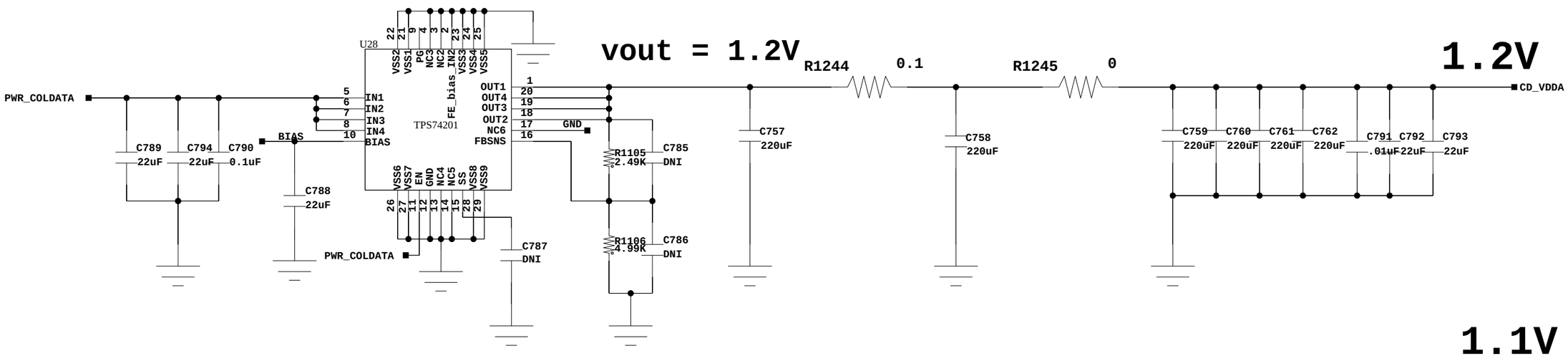

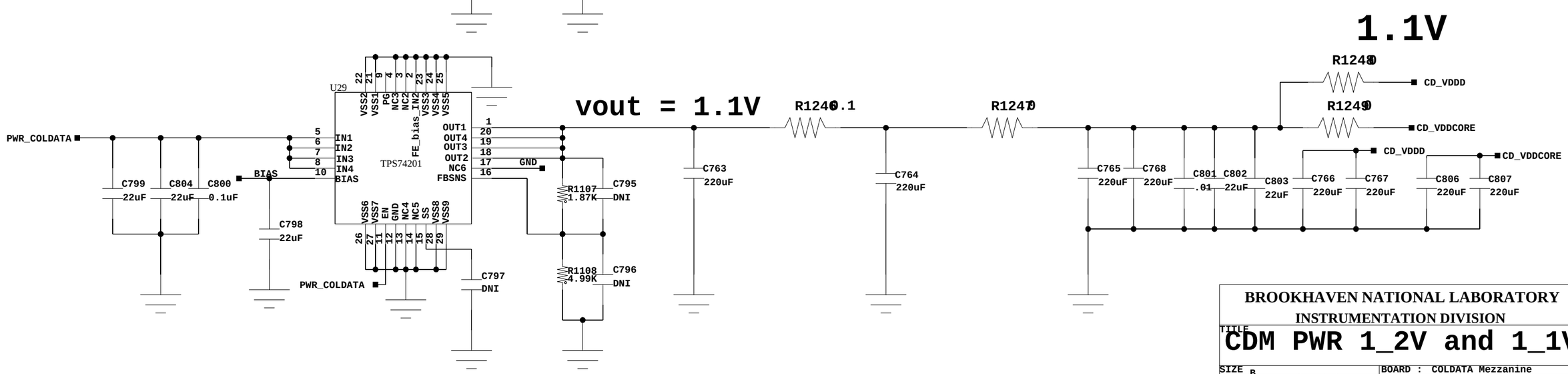

BROOKHAVEN NATIONAL LABORATORY
INSTRUMENTATION DIVISION

TITLE **CDM PWR 1_2V and 1_1V**

SIZE B	BOARD : COLDATA Mezzanine
DRAWN : Jack Fried	DATE : 06/07/2022:11:49

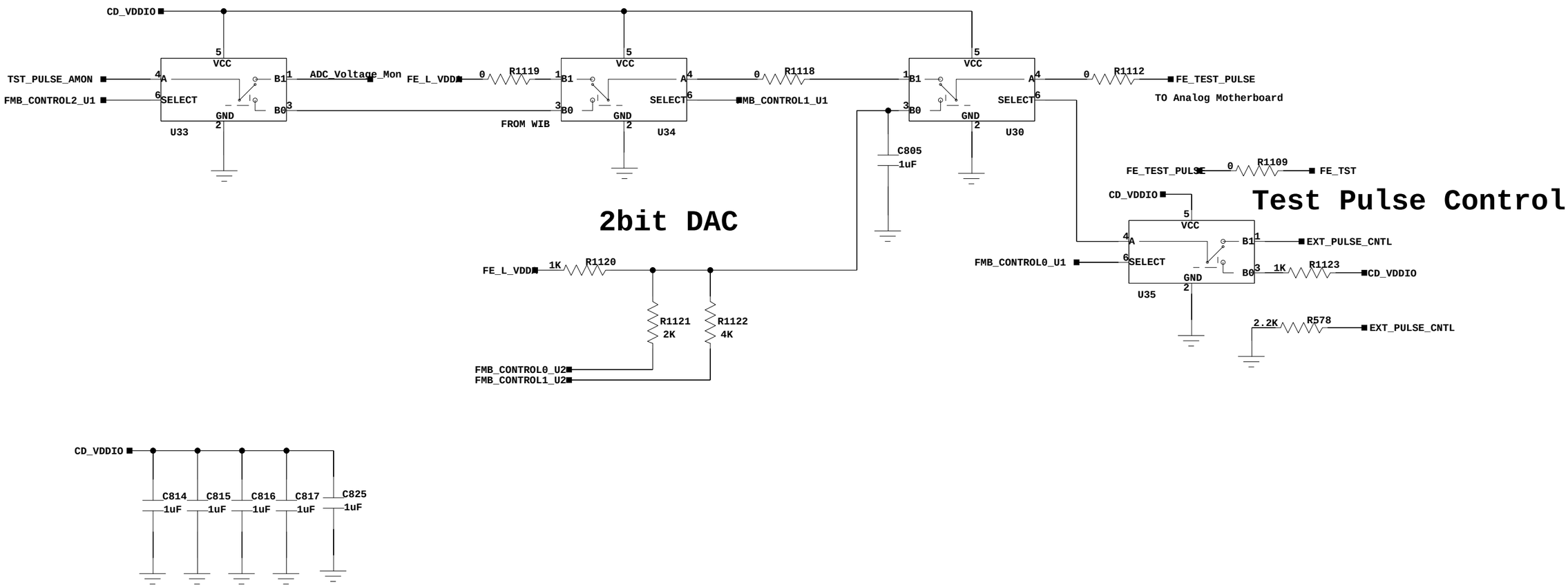

BROOKHAVEN NATIONAL LABORATORY
INSTRUMENTATION DIVISION

TITLE
CDM EXT DAC or REG CONTROL

SIZE B	BOARD : COLDATA Mezzanine
DRAWN : Jack Fried	DATE : 06/07/2022:12:02

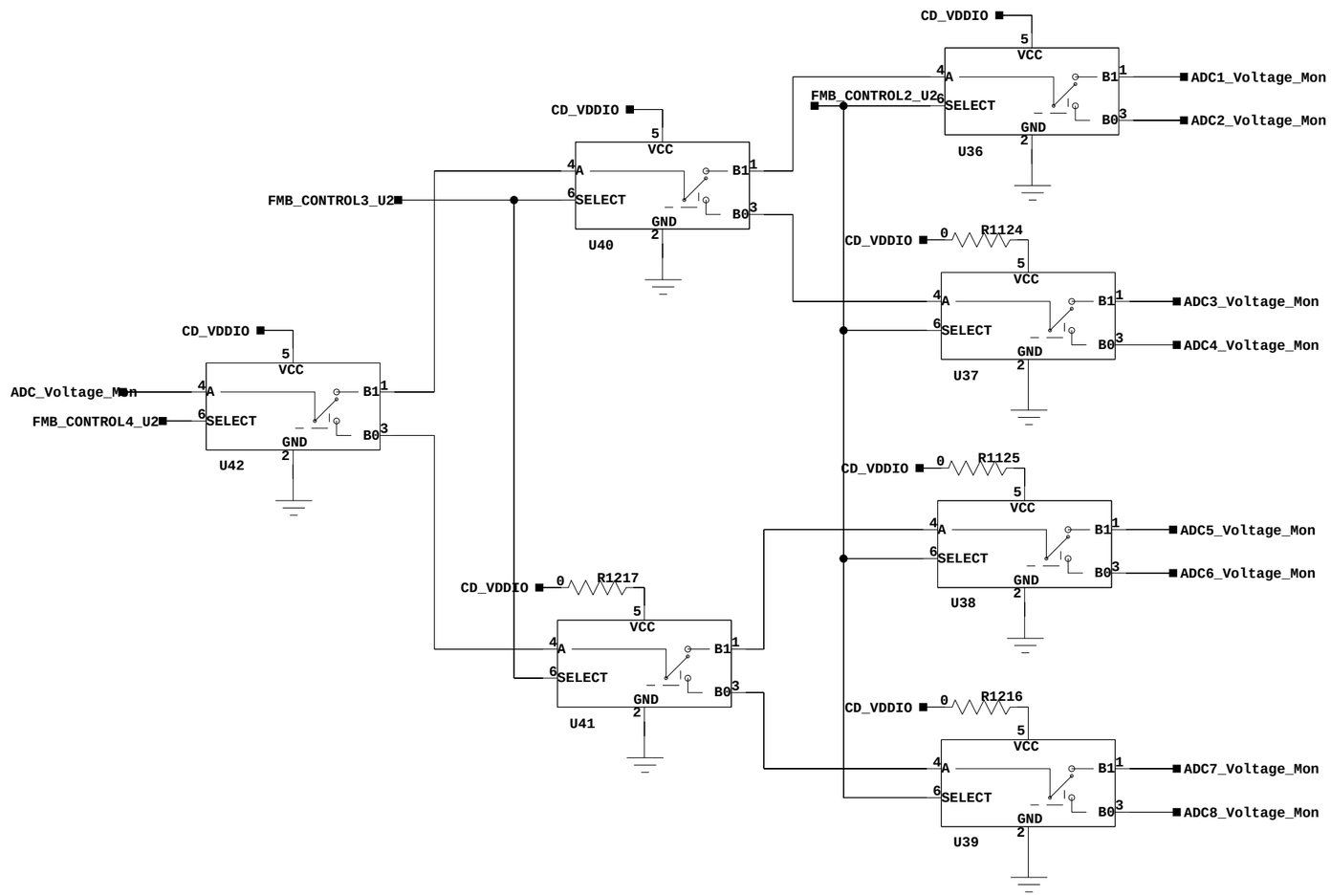

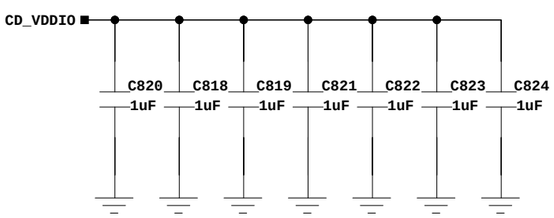

BROOKHAVEN NATIONAL LABORATORY
INSTRUMENTATION DIVISION

TITLE
ColdADC Voltage Monitor

SIZE B	BOARD : Monolithic FEMB IO1826-A
DRAWN : Jack Fried	DATE : 06/07/2022:11:49