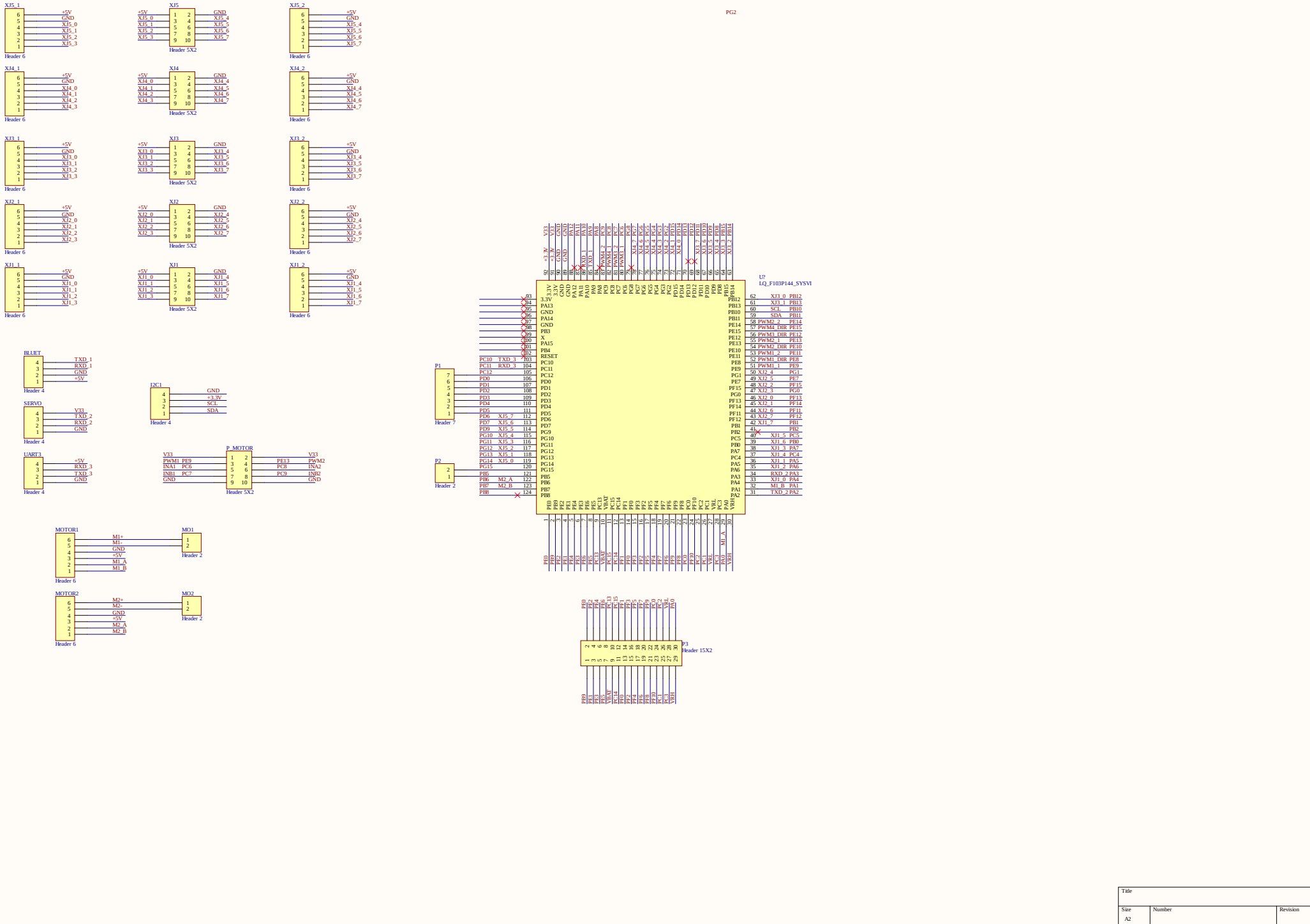

Title			
Size: A2	Number:		Revision:
Date: 5-15-2021		Sheet of	
File: D:\NASDATA\...\20210515-F103CONTROL.SchDoc		Drawn by:	

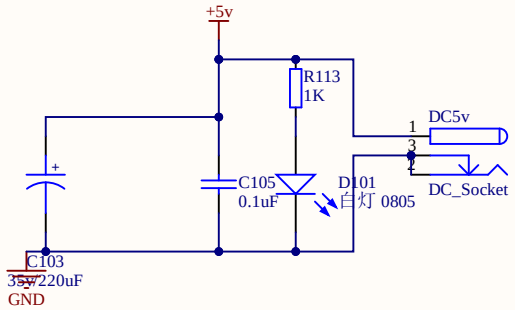

24v转5v

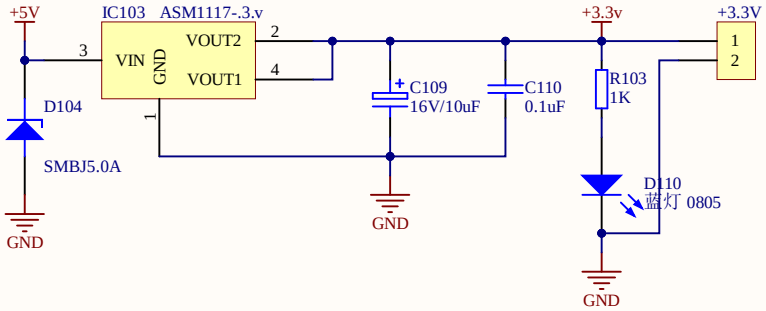

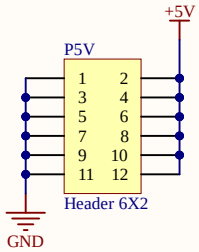

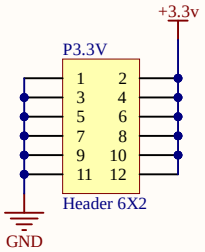

Title	电源及外部接口	
Size A4	Number	Revision
Date: 5-15-2021		Sheet of
File: D:\NASDATA\..\20210515-power.SchDoc		Drawn By:

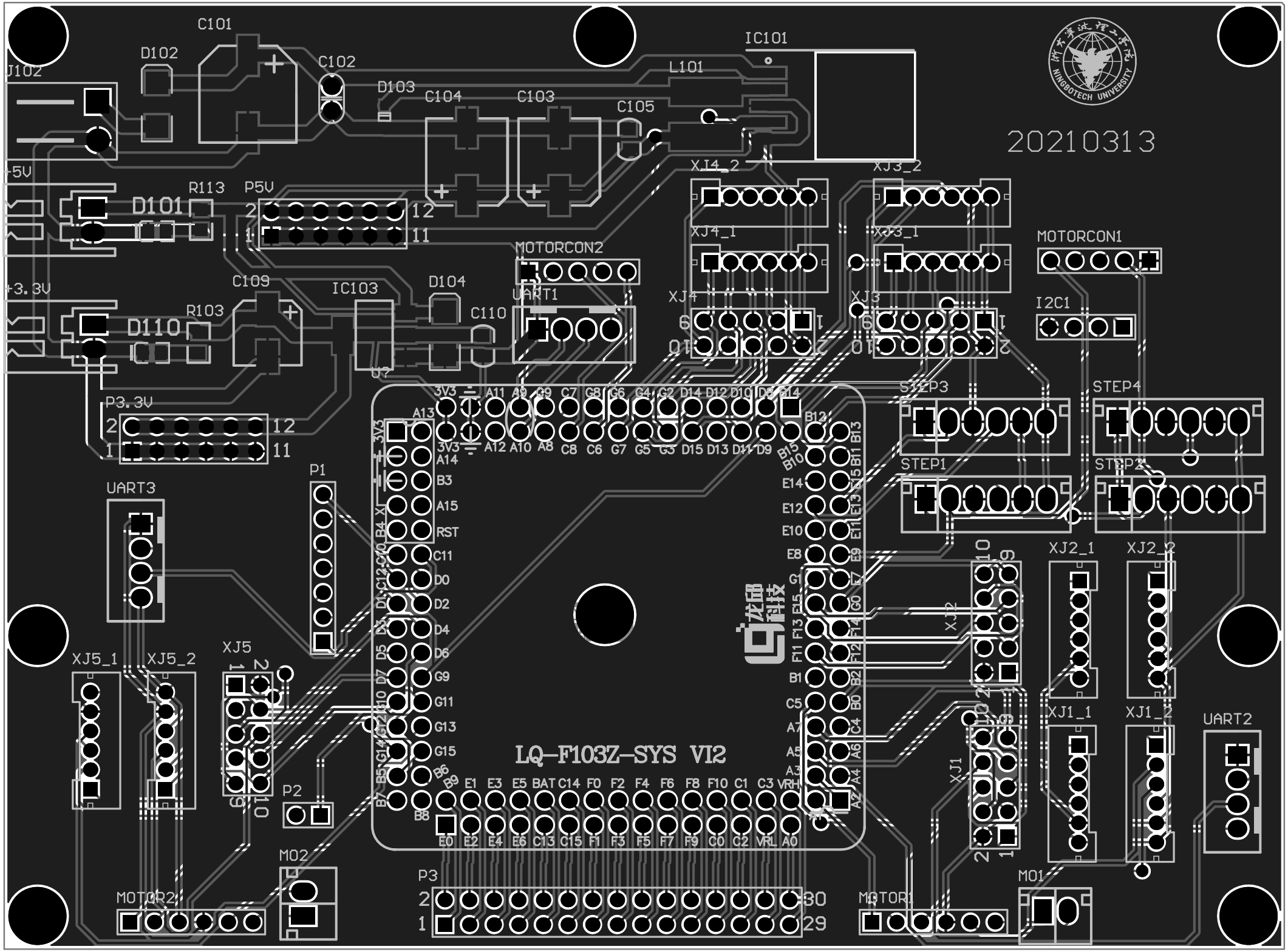
20210313
LQ-F103Z-SYS VI2
C101
D102
C102
D103
C104
C103
C105
L101
IC101
J102
+5V
R113
P5V
D101
+3.3V
C109
IC103
D104
C110
R103
D110
MOTORCON2
UART1
XJ4_2
XJ3_2
XJ4_1
XJ3_1
XJ4
XJ3
MOTORCON1
I2C1
STEP3
STEP4
STEP1
STEP2
P3.3V
UART3
P1
XJ5_1
XJ5_2
XJ5
P2
MO2
MOTOR2
P3
MOTOR1
MO1
XJ2
XJ2_1
XJ2_2
XJ1
XJ1_1
XJ1_2
UART2

Comment	Description	Designator	Footprint	LibRef	Quantity
	Connector	+3.3V	XH2/2.54mm/90	CON2	1
Header 4	Header, 4-Pin	BLUET, SERVO, UART3	XH4/2.54mm/180	Header 4	3
35v/220uF		C103	SMD-EC8X8X10	电解电容	1
0.1uF		C105, C110	C0805	贴片电容	2
16V/10uF		C109	SMD-EC6.3X6.3X10	钽电容	1
白灯 0805	发光二极管	D101	0805_LED_S1	0805 白灯	1
SMBJ5.0A		D104	SMB	贴片稳压二极管	1
蓝灯 0805	发光二极管	D110	0805_LED_S1	0805 蓝灯	1
DC_Socket		DC5v	DC-002	DC_Socket	1
Header 4	Header, 4-Pin	I2C1	HDR1X4	Header 4	1
ASM1117-.3.v		IC103	SOT223	ASM1117	1
Header 2	Header, 2-Pin	MO1, MO2	XH2/2.54mm/180	Header 2	2
Header 6	Header, 6-Pin	MOTOR1, MOTOR2	HDR1X6	Header 6	2
Header 7	Header, 7-Pin	P1	HDR1X7	Header 7	1
Header 2	Header, 2-Pin	P2	HDR1X2	Header 2	1
Header 15X2	Header, 15-Pin, Dual row	P3	HDR2X15	Header 15X2	1
Header 6X2	Header, 6-Pin, Dual row	P3.3V, P5V	HDR2X6	Header 6X2	2
Header 5X2	Header, 5-Pin, Dual row	P_MOTOR, XJ1, XJ2, XJ3, XJ4, XJ5	HDR2X5	Header 5X2	6
1K		R103, R113	R0805	贴片电阻	2
LQ_F103P144_SYSVI	LQ_F103P144_SYSVI	U?	LQ_F103P144_SYSVI	LQ_F103P144_SYSVI	1
Header 6	Header, 6-Pin	XJ1_1, XJ1_2, XJ2_1, XJ2_2, XJ3_1, XJ3_2, XJ4_1, XJ4_2, XJ5_1, XJ5_2	PH2.0-6P	Header 6	10