Message Passing Interface (MPI)

Dimitri Lecas
Isabelle Dupays
Rémi Lacroix

MPI – Plan I

1 – Introduction
1.1 – Availability and updating

This document is likely to be updated regularly. The most recent version is available on the Web server of IDRIS, section "Training Course Materials":
`https://cours.idris.fr`

- IDRIS
  Institut for Development and Resources in Intensive Scientific Computing
  Rue John Von Neumann
  Bâtiment 506
  BP 167
  91403 ORSAY CEDEX
  France
  `http://www.idris.fr`

- Translated with the help of Cynthia TAUPIN.

1 – Introduction
1.2 – Introduction

Parallélism

The goal of parallel programming is to :

- Reduce elapsed time.
- Do larger computations.
- Exploit parallelism of modern processor architectures (multicore, multithreading).

For group work, coordination is required. MPI is a library which allows process coordination by using a message-passing paradigm.

1 – Introduction
1.3 – Concept of message passing

Sequential progamming model

- The program is executed by one and only one process.
- All the variables and constants of the program are allocated in the memory of the process.
- A process is executed on a physical processor of the machine.

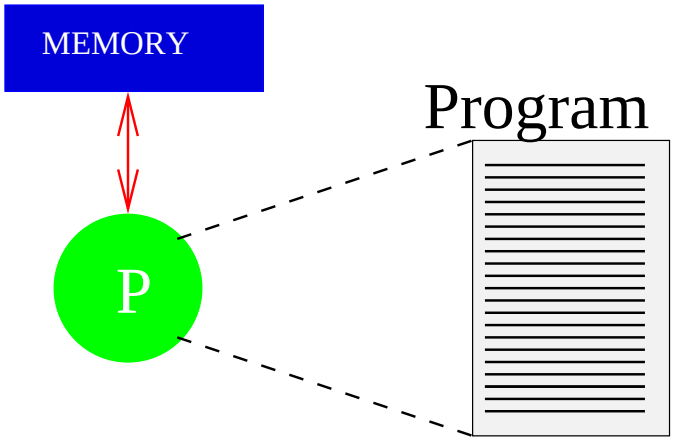

Figure 1 : Sequential programming model

Message passing programming model

- The program is written in a classic language (Fortran, C, C++, etc.).
- All the program variables are private and reside in the local memory of each process.
- Each process has the possibility of executing different parts of a program.
- A variable is exchanged between two or several processes via a programmed call to specific subroutines.

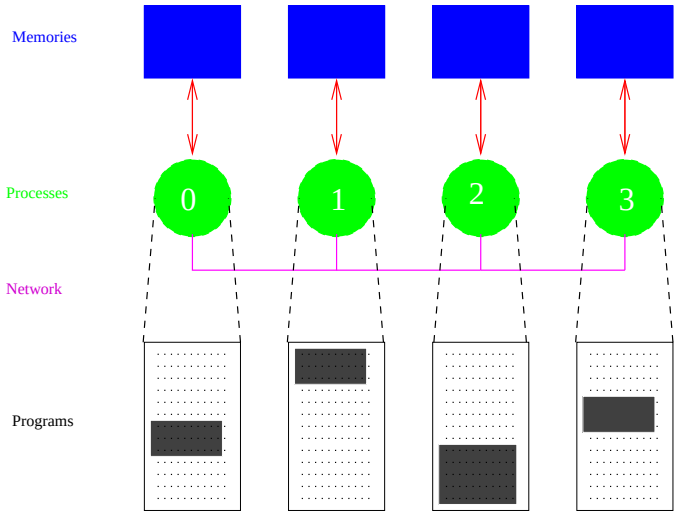

Figure 2 : Message Passing Programming Model

Message Passing concepts

If a message is sent to a process, the process must receive it.

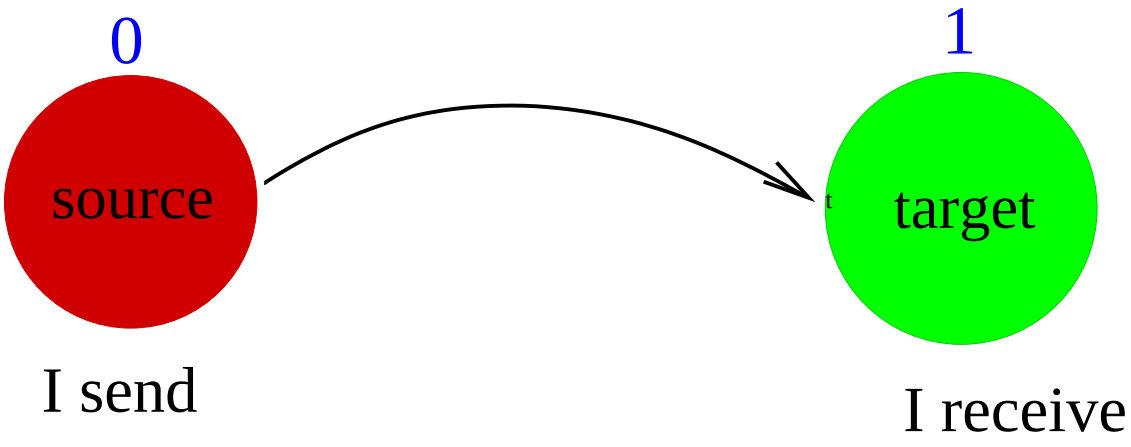

Figure 3 : Message Passing

Message content

- A message consists of data chunks passing from the sending process to the receiving process/pocesses.
- In addition to the data (scalar variables, arrays, etc.) to be sent, a message must contain the following information:
  - The identifier of the sending process
  - The datatype
  - The length
  - The identifier of the receiving process

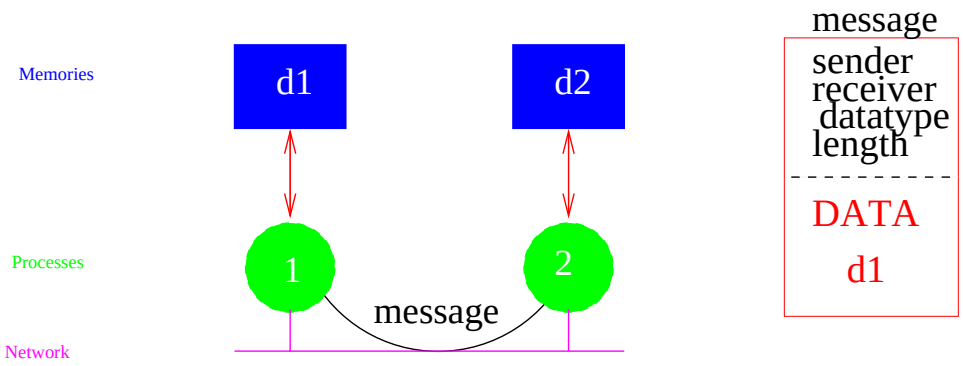

Figure 4 : Message Construction

Environment

- The exchanged messages are interpreted and managed by an environment comparable to telephony, e-mail, postal mail, etc.
- The message is sent to a specified address.
- The receiving process must be able to classify and interpret the messages which are sent to it.
- The environment in question is MPI (*Message Passing Interface*). An MPI application is a group of autonomous processes, each executing its own code and communicating via calls to MPI library subroutines.

1 – Introduction
1.4 – Distributed memory

Supercomputer architecture

Most supercomputers are distributed-memory computers. They are made up of many nodes and memory is shared within each node.

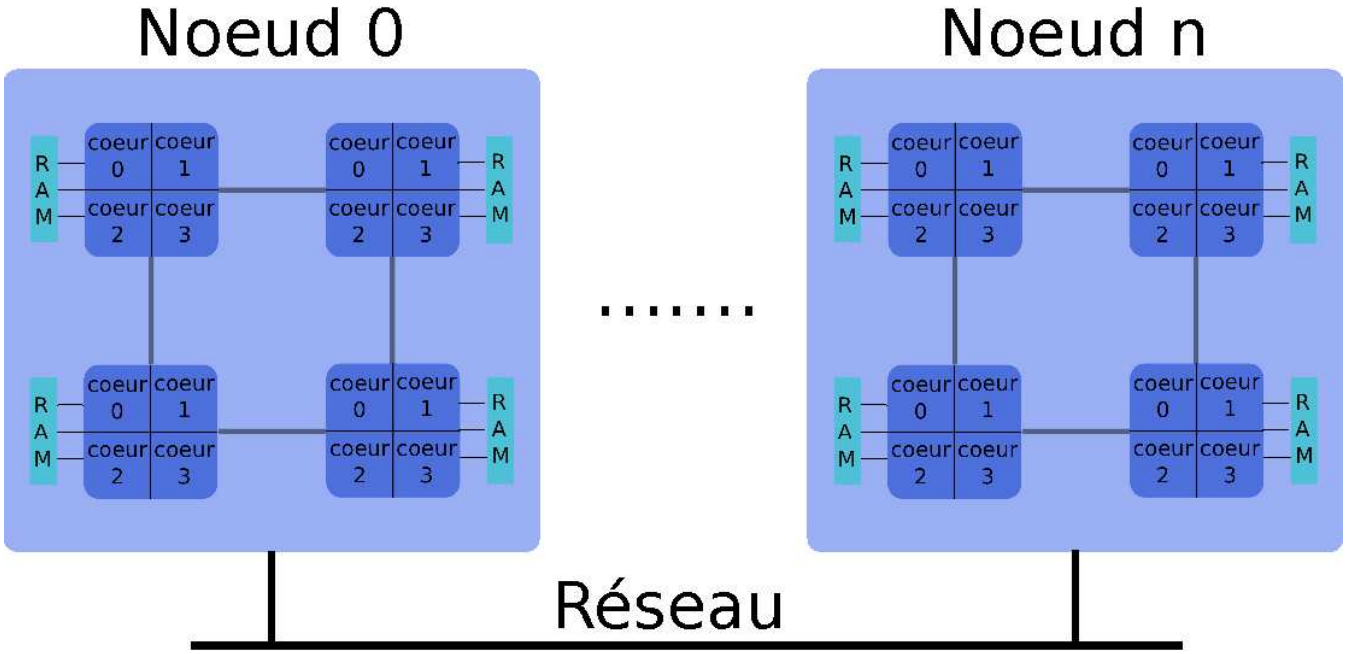

Figure 5 : Supercomputor architecture

Ada

- 332 nodes
- 4 eight-core Intel SandyBridge processors, 2,7 GHz by node
- 10 624 cores
- 46 TB (304 nodes with 128 GB and 28 nodes with 256 GB)
- 230 Tflop/s peak
- 192 Tflop/s (linpack)
- 244 kWatt
- 786 MFLOPS/watt

Turing

- 6 144 nodes
- 16 POWER A2 processor 1,6 GHz by node
- 98 304 cores
- 393 216 logical cores
- 96 TiB (16 GB per node)
- 1 258 Tflop/s peak
- 1 073 Tflop/s (linpack)
- 493 kWatt
- 2 176 MFLOPS/watt

MPI vs OpenMP

OpenMP uses a shared memory paradigm, while MPI uses a distributed memory paradigm.

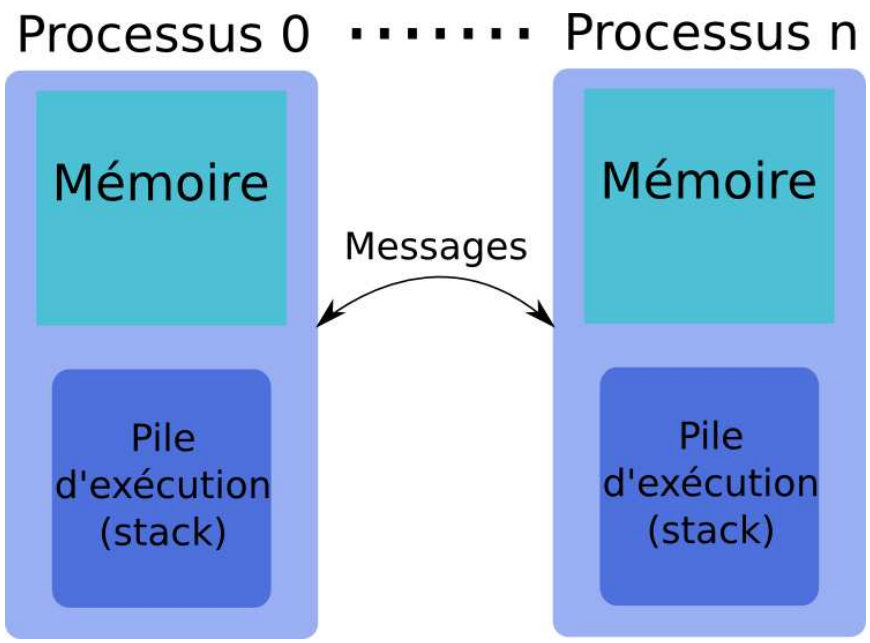

Figure 6 : MPI scheme

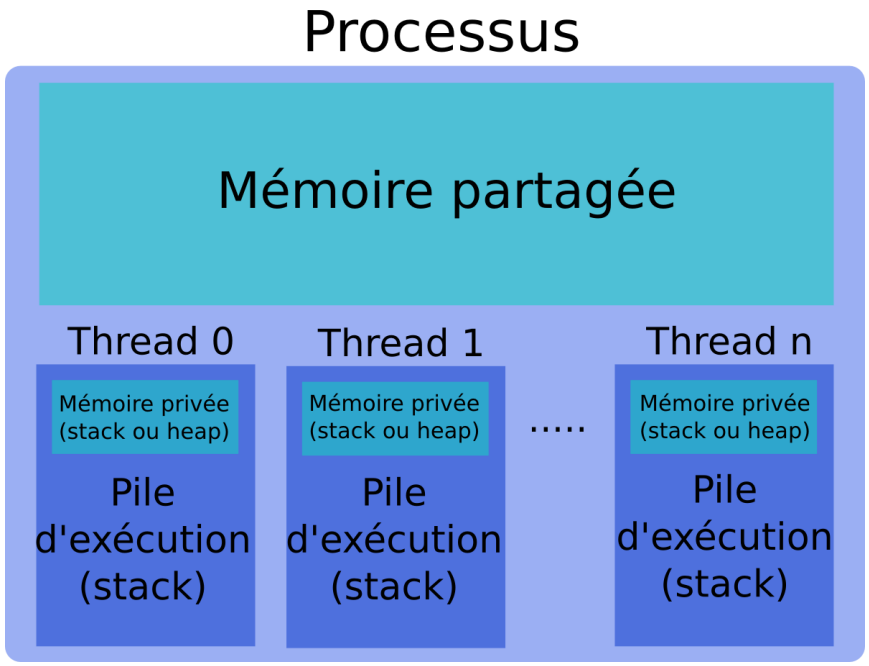

Figure 7 : OpenMP scheme

Domain decomposition

A schema that we often see with MPI is domain decomposition. Each process controls a part of the global domain and mainly communicates with its neighbouring processes.

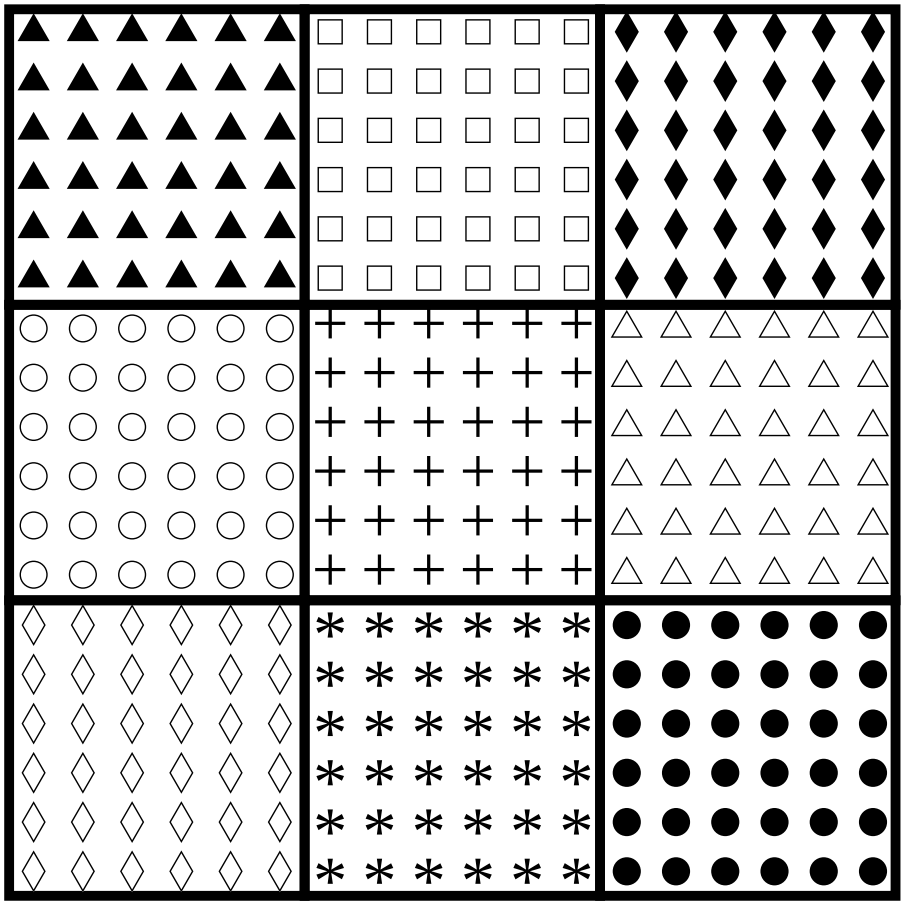

Figure 8 : Decomposition in subdomains

1 – Introduction
1.5 – History

History

- Version 1.0 : June 1994, the MPI (Message Passing Interface) Forum, with the participation of about forty organisations, developed the definition of a set of subroutines concerning the MPI library.
- Version 1.1 : June 1995, only minor changes.
- Version 1.2 : 1997, minor changes for more consistency in the names of some subroutines.
- Version 1.3 : September 2008, with clarifications of the MPI 1.2 version which are consistent with clarifications made by MPI-2.1.
- Version 2.0 : Released in July 1997, important additions which were intentionally not included in MPI 1.0 (process dynamic management, one-sided communications, parallel I/O, etc.).
- Version 2.1 : June 2008, with clarifications of the MPI 2.0 version but without any changes.
- Version 2.2 : September 2009, with only "small" additions.

MPI 3.0

- Version 3.0: September 2012 Changes and important additions compared to version 2.2 ;
  - Nonblocking collective communications
  - Revised implementation of one-sided communications
  - Fortran (2003-2008) bindings
  - C++ bindings removed
  - Interfacing of external tools (for debugging and performance measurements)
  - etc.
- Version 3.1 : June 2015
  - Correction to the Fortran (2003-2008) bindings ;
  - New nonblocking collective I/O routines ;

1 – Introduction
1.6 – Library

Library

- Message Passing Interface Forum. *MPI: A Message-Passing Interface Standard, Version 3.1.* High-Performance Computing Center Stuttgart (HLRS), University of Stuttgart, 2015. `https://fs.hlrs.de/projects/par/mpi/mpi31/`
- William Gropp, Ewing Lusk, and Anthony Skjellum. *Using MPI, third edition Portable Parallel Programming with the Message-Passing Interface*, MIT Press, 2014.
- William Gropp, Torsten Hoefler, Rajeev Thakur and Erwing Lusk : *Using Advanced MPI Modern Features of the Message-Passing Interface*, MIT Press, 2014.
- Additional references :
  `http://www.mpi-forum.org/docs/`
  `http://www.mcs.anl.gov/research/projects/mpi/learning.html`

Open source MPI implementations

These can be installed on a large number of architectures but their performance results are generally inferior to the implementations of the constructors.

- MPICH : http://www.mpich.org/
- Open MPI : http://www.open-mpi.org/

Tools

- Debuggers
  - Totalview
    http://www.roguewave.com/products/totalview.aspx
  - DDT
    http://www.allinea.com/products/ddt/
- Performance measurement
  - MPE : *MPI Parallel Environment*
    http://www.mcs.anl.gov/research/projects/perfvis/download/index.htm
  - FPMPI : *FPMPI*
    http://www.mcs.anl.gov/research/projects/fpmpi/WWW/
  - Scalasca : *Scalable Performance Analysis of Large-Scale Applications*
    http://www.scalasca.org/

Open source parallel scientific libraries

- ScaLAPACK : Linear algebra problem solvers using direct methods.http://www.netlib.org/scalapack/.
- PETSc : Linear and non-linear algebra problem solvers using iterative methods.http://www.mcs.anl.gov/petsc/.
- PaStiX : Parallel sparse direct Solvers.http://pastix.gforge.inria.fr/files/README-txt.html.
- FFTW : Fast Fourier Transform.http://www.fftw.org.

Description

- Every program unit calling MPI subroutines has to include a header file. In Fortran, we must use the `mpi` module introduced in MPI-2 (in MPI-1, it was the `mpif.h` file).
- The `MPI_INIT()` subroutine initializes the necessary environment:

```
MPI_INIT(code)

integer, intent(out) :: code
```

- The `MPI_FINALIZE()` subroutine disables this environment :

```
MPI_FINALIZE(code)

integer, intent(out) :: code
```

Difference between c and Fortran

For the c/c++ program :

- You need to incude the `mpi.h` file.
- The code argument is the return value.
- Only the MPI prefix and the first following letter are in upper-case letters.
- Except for `MPI_INIT()`, the function arguments are identical to Fortran.

```
int MPI_Init(int *argc, char ***argv);
int MPI_Finalize(void);
```

Communicators

- All the MPI operations require the communicators to be carried out. The default communicator is `MPI_COMM_WORLD` which includes all the active processes.

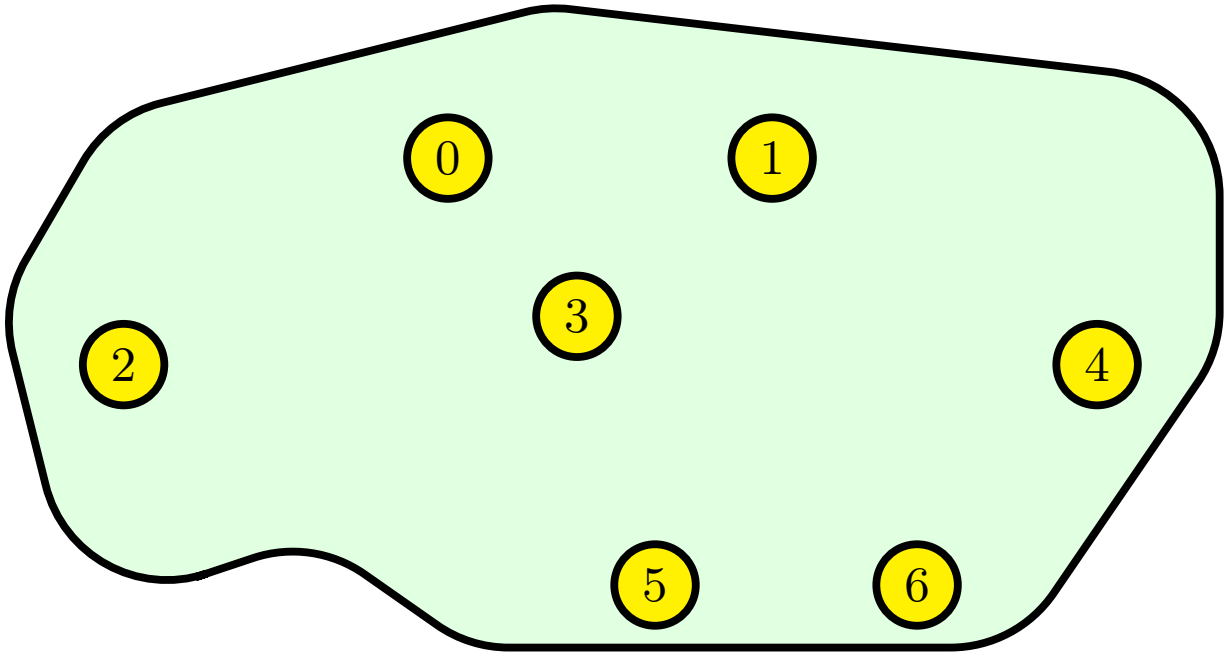

Figure 9 : MPI_COMM_WORLD Communicator

Termination of a program

A program can sometimes be in a situation which requires it to stop execution before the normal ending. This is the case when one of the processes cannot allocate the memory needed for its calculation. In this case, the `MPI_ABORT()` subroutine must be used and not the Fortran instruction *stop*.

```
MPI_ABORT(comm, error, code)

integer, intent(in)  :: comm, error
integer, intent(out) :: code
```

- `comm` : All the processus belonging to this communicator will be stopped; it is advised to use `MPI_COMM_WORLD`;
- `error` : Error number is return to the UNIX environment.

Code

It is not nessesary to check the code value after calls to MPI routines. By default, when MPI encounters a problem, the program is automatically stopped as in an implicit call to `MPI_ABORT()` subroutine.

Rank and size

- At any moment, we can know the number of processes managed by a certain communicator by the MPI_COMM_SIZE() subroutine :

```
MPI_COMM_SIZE(comm,nb_procs,code)

integer, intent(in)  :: comm
integer, intent(out) :: nb_procs,code
```

- Similarly, the MPI_COMM_RANK() subroutine allows obtaining the process rank (i.e. its instance number, which is a number between 0 and the value sent by MPI_COMM_SIZE() – 1) :

```
MPI_COMM_RANK(comm,rank,code)

integer, intent(out) :: rank,code
integer, intent(in)  :: comm
```

```fortran
program who_am_I
  use mpi
  implicit none
  integer :: nb_procs,rank,code

  call MPI_INIT(code)

  call MPI_COMM_SIZE(MPI_COMM_WORLD,nb_procs,code)
  call MPI_COMM_RANK(MPI_COMM_WORLD,rank,code)

  print *,'I am the process ',rank,' among ',nb_procs

  call MPI_FINALIZE(code)
end program who_am_I
```

```
> mpiexec -n 7 who_am_I

I am process 3 among 7
I am process 0 among 7
I am process 4 among 7
I am process 1 among 7
I am process 5 among 7
I am process 2 among 7
I am process 6 among 7
```

3 – Point-to-point Communications
3.1 – General Concepts

General Concepts

A point-to-point communication occurs between two processes, one called the sender process and the other called the receiver process.

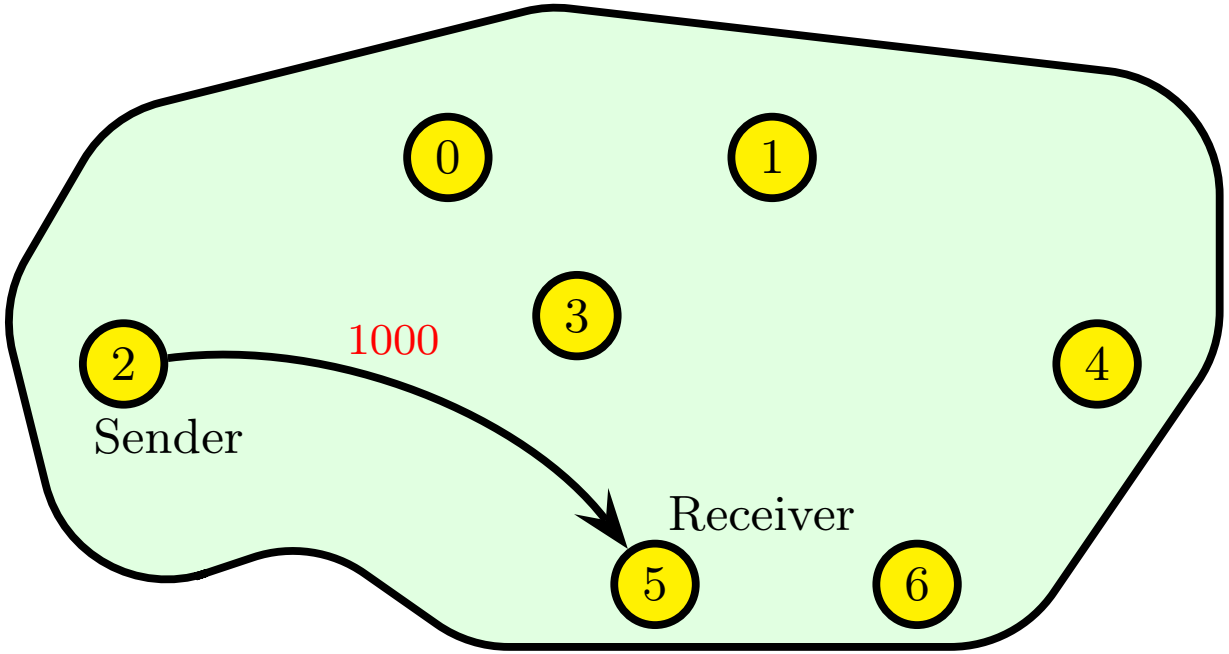

Figure 10 : Point-to-point communication

General Concepts

- The sender and the receiver are identified by their rank in the communicator.
- The so-called message envelope is composed of:
  - The rank of the sender process
  - The rank of the receiver process
  - The message tag
  - The communicator which defines the process group and context of the commmunication
- The exchanged data are predefined (integer, real, etc.) or individual derived datatypes.
- In each case, there are several transfer modes which make calls to different protocols.

3 – Point-to-point Communications
3.2 – Blocking send and receive

Blocking Send MPI_SEND

```
MPI_SEND(buf,count,datatype,dest,tag,comm,code)

<type>:: buf
integer :: count, datatype
integer :: dest, tag, comm, code
```

Send, starting at position buf, a message of count element, type datatype, tagged with tag, to the process of rank dest in the communicator comm.

Remark:
This call is blocking: The execution remains blocked until the message can be re-written without risk of overwriting the value to be sent.

Blocking Receive MPI_RECV

```
MPI_RECV(buf,count,datatype,source,tag,comm,status,code)

<type>:: buf
integer :: count, datatype
integer :: source, tag, comm, code
integer, dimension(MPI_STATUS_SIZE) :: status
```

Receive, starting at the position buf, a message of count element, type datatype tagged tag, from the processus source and store it starting at position buf.

Remarks:

- status receives information about the communication : source, tag, code, ...
- The MPI_RECV will not work with a MPI_SEND unless these two calls have the same envelope (source, dest, tag, comm).
- This call is blocking: The execution remains blocked until the message content corresponds to the received message.

```fortran
program point_to_point
  use mpi
  implicit none

  integer, dimension(MPI_STATUS_SIZE) :: status
  integer, parameter                  :: tag=100
  integer                             :: rank,value,code

  call MPI_INIT(code)

  call MPI_COMM_RANK(MPI_COMM_WORLD,rank,code)

  if (rank == 2) then
     value=1000
     call MPI_SEND(value,1,MPI_INTEGER,5,tag,MPI_COMM_WORLD,code)
  elseif (rank == 5) then
     call MPI_RECV(value,1,MPI_INTEGER,2,tag,MPI_COMM_WORLD,status,code)
     print *,'I, process 5, I received ',value,' from the process 2'
  end if

  call MPI_FINALIZE(code)

end program point_to_point
```

```
> mpiexec -n 7 point_to_point

I, process 5, I received 1000 from the process 2
```

3 – Point-to-point Communications
3.3 – Predefined MPI Datatypes

Fortran MPI Datatypes

MPI Type	Fortran Type
MPI_INTEGER	INTEGER
MPI_REAL	REAL
MPI_DOUBLE_PRECISION	DOUBLE PRECISION
MPI_COMPLEX	COMPLEX
MPI_LOGICAL	LOGICAL
MPI_CHARACTER	CHARACTER

Table 1 : Predefined MPI Datatypes (Fortran)

C MPI Datatypes

MPI Type	C Type
MPI_CHAR	`signed char`
MPI_SHORT	`signed short`
MPI_INT	`signed int`
MPI_LONG	`signed long int`
MPI_UNSIGNED_CHAR	`unsigned char`
MPI_UNSIGNED_SHORT	`unsigned short`
MPI_UNSIGNED	`unsigned int`
MPI_UNSIGNED_LONG	`unsigned long int`
MPI_FLOAT	`float`
MPI_DOUBLE	`double`
MPI_LONG_DOUBLE	`long double`

Table 2 : Predefined MPI Datatypes (C)

3 – Point-to-point Communications
3.4 – Other Possibilities

Other possibilities

- On the reception of a message, the rank of the sender and the tag can be replaced respectively by the `MPI_ANY_SOURCE` and `MPI_ANY_TAG` wildcards.
- A communication with the dummy process of rank `MPI_PROC_NULL` has no effect.
- `MPI_STATUS_IGNORE` is a predefined constant which can be used instead of the status variable.
- There are syntactic variants, `MPI_SENDRECV()` and `MPI_SENDRECV_REPLACE()` which carry out both send and receive operations (in the first case, the reception zone must be different than the send zone).
- It is possible to create more complex data structures by using derived datatypes.

Simultaneous send and receive MPI_SENDRECV

```
MPI_SENDRECV(sendbuf,sendcount,sendtype,
             dest,sendtag,
             recvbuf,recvcount,recvtype,
             source,recvtag, comm, status, code)

<type>:: sendbuf, recvbuf
integer :: sendcount, recvcount
integer :: sendtype, recvtype
integer :: source, dest, sendtag, recvtag, comm, code
integer, dimension(MPI_STATUS_SIZE) :: status
```

- Send, starting at position sendbuf, a message of sendcount element, type sendtype, labeled sendtag, to the process dest in the communicator comm.
- Receive, a message of recvcount element, type recvtype, tagged recvtag, from the process source in the communicator comm and store it starting at position recvbuf.

Simultaneous send and receive MPI_SENDRECV

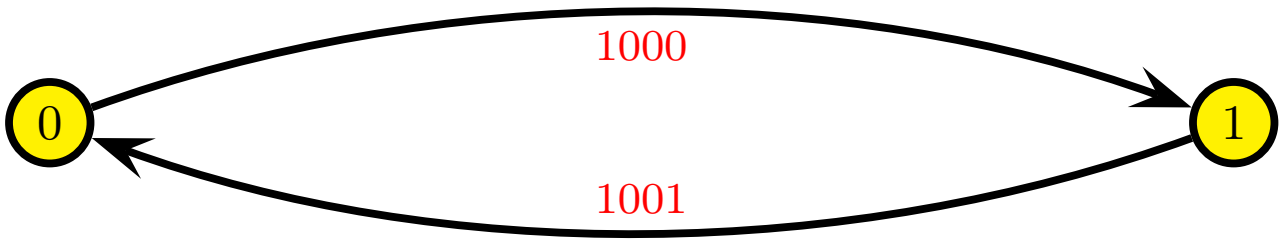

Figure 11 : `sendrecv` Communication between the Processes 0 and 1

```fortran
program sendrecv
  use mpi
  implicit none
  integer                                :: rank,value,num_proc,code
  integer,parameter                      :: tag=110

  call MPI_INIT(code)
  call MPI_COMM_RANK(MPI_COMM_WORLD,rank,code)

  ! We suppose that we have exactly 2 processes
  num_proc=mod(rank+1,2)

  call MPI_SENDRECV(rank+1000,1,MPI_INTEGER,num_proc,tag,value,1,MPI_INTEGER, &
                    num_proc,tag,MPI_COMM_WORLD,MPI_STATUS_IGNORE,code)

  print *,'I, process ',rank,', I received',value,'from process ',num_proc

  call MPI_FINALIZE(code)
end program sendrecv
```

```
> mpiexec -n 2 sendrecv

I, process 1, I received 1000 from process 0
I, process 0, I received 1001 from process 1
```

Attention!

It should be noted that in the case of a synchronous implementation of the MPI_SEND() subroutine, the code in the preceding example will deadlock if, instead of using the MPI_SENDRECV() subroutine, we use a MPI_SEND() subroutine followed by a MPI_RECV() one. In fact, each of the two processes will wait for a receive command which will never come because the two sends would stay suspended.

```
call MPI_SEND(rank+1000,1,MPI_INTEGER,num_proc,tag,MPI_COMM_WORLD,code)
call MPI_RECV(value,1,MPI_INTEGER,num_proc,tag,MPI_COMM_WORLD,MPI_STATUS_IGNORE,code)
```

Simultaneous send and receive MPI_SENDRECV_REPLACE

```
MPI_SENDRECV_REPLACE(buf,count,datatype,
                     dest,sendtag,
                     source, recvtag, comm, status, code)

<type>  :: buf
integer :: count
integer :: datatype
integer :: source, dest, sendtag, recvtag, comm, code
integer, dimension(MPI_STATUS_SIZE) :: status
```

- Send starting at position buf a message of count element of type datatype, labeled sendtag, to the processus dest in the communicator comm ;
- Receive a message of count element of type datatype tagged recvtag from the processus source in the communicator comm and store it at the same position buf.

```
program wildcard
  use mpi
  implicit none
  integer, parameter                    :: m=4,tag=11
  integer, dimension(m,m)               :: A
  integer                               :: nb_procs,rank,code,i
  integer, dimension(MPI_STATUS_SIZE):: status

  call MPI_INIT(code)
  call MPI_COMM_SIZE(MPI_COMM_WORLD,nb_procs,code)
  call MPI_COMM_RANK(MPI_COMM_WORLD,rank,code)
  A(:,:) = 0

  if (rank == 0) then
     ! Initialisation of the matrix A on the process 0
     A(:,:) = reshape((/ (i,i=1,m*m) /), (/ m,m /))
     ! Sending of 3 elements of the matrix A to the process 1
     call MPI_SEND(A(1,1),3,MPI_INTEGER,1,tag1,MPI_COMM_WORLD,code)
  else
     ! We receive the message
    call MPI_RECV (A(1,2),3, MPI_INTEGER ,MPI_ANY_SOURCE,MPI_ANY_TAG, &
                   MPI_COMM_WORLD,status,code)
    print *,'I, process ',rank,', I received 3 elements from the process ', &
            status(MPI_SOURCE), 'with tag', status( MPI_TAG ), &
            " the elements are ", A(1:3,2)
  end if
  call MPI_FINALIZE(code)
end program wildcard
```

```
> mpiexec -n 2 joker
I, process  1, I have received  3  elements from the process  0
 with tag 11 the elements are 1            2            3
```

4 – Collective communications
4.1 – General concepts

General concepts

- Collective communications allow making a series of point-to-point communications in one single call.
- A collective communication always concerns all the processes of the indicated communicator.
- For each process, the call ends when its participation in the collective call is completed, in the sense of point-to-point communications (therefore, when the concerned memory area can be changed).
- The management of tags in these communications is transparent and system-dependent. Therefore, they are never explicitly defined during calls to subroutines. An advantage of this is that collective communications never interfere with point-to-point communications.

Types of collective communications

There are three types of subroutines :

1. One which ensures global synchronizations : `MPI_BARRIER()`
2. Ones which only transfer data :
   - Global distribution of data : `MPI_BCAST()`
   - Selective distribution of data : `MPI_SCATTER()`
   - Collection of distributed data : `MPI_GATHER()`
   - Collection of distributed data by all the processes: `MPI_ALLGATHER()`
   - Collection and selective distribution by all the processes of distributed data: `MPI_ALLTOALL()`
3. Ones which, in addition to the communications management, carry out operations on the transferred data :
   - Reduction operations (sum, product, maximum, minimum, etc.), whether of a predefined or personal type : `MPI_REDUCE()`
   - Reduction operations with distributing of the result (this is in fact equivalent to an `MPI_REDUCE()` followed by an `MPI_BCAST()`) : `MPI_ALLREDUCE()`

4 – Collective communications
4.2 – Global synchronization: MPI_BARRIER()

Global synchronization : MPI_BARRIER()

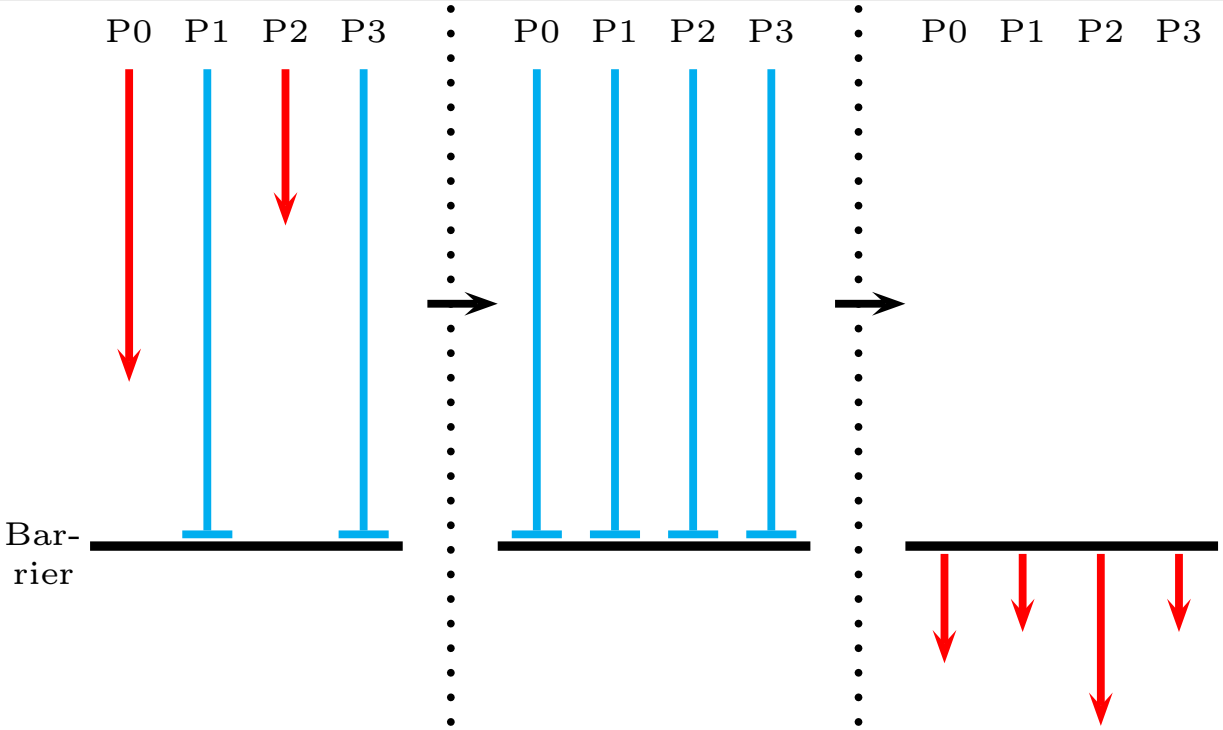

Figure 12 : Global Synchronization : MPI_BARRIER()

```
MPI_BARRIER(MPI_COMM_WORLD,code)

integer, intent(out) :: code
```

4 – Collective communications
4.3 – Global disribution : MPI_BCAST()

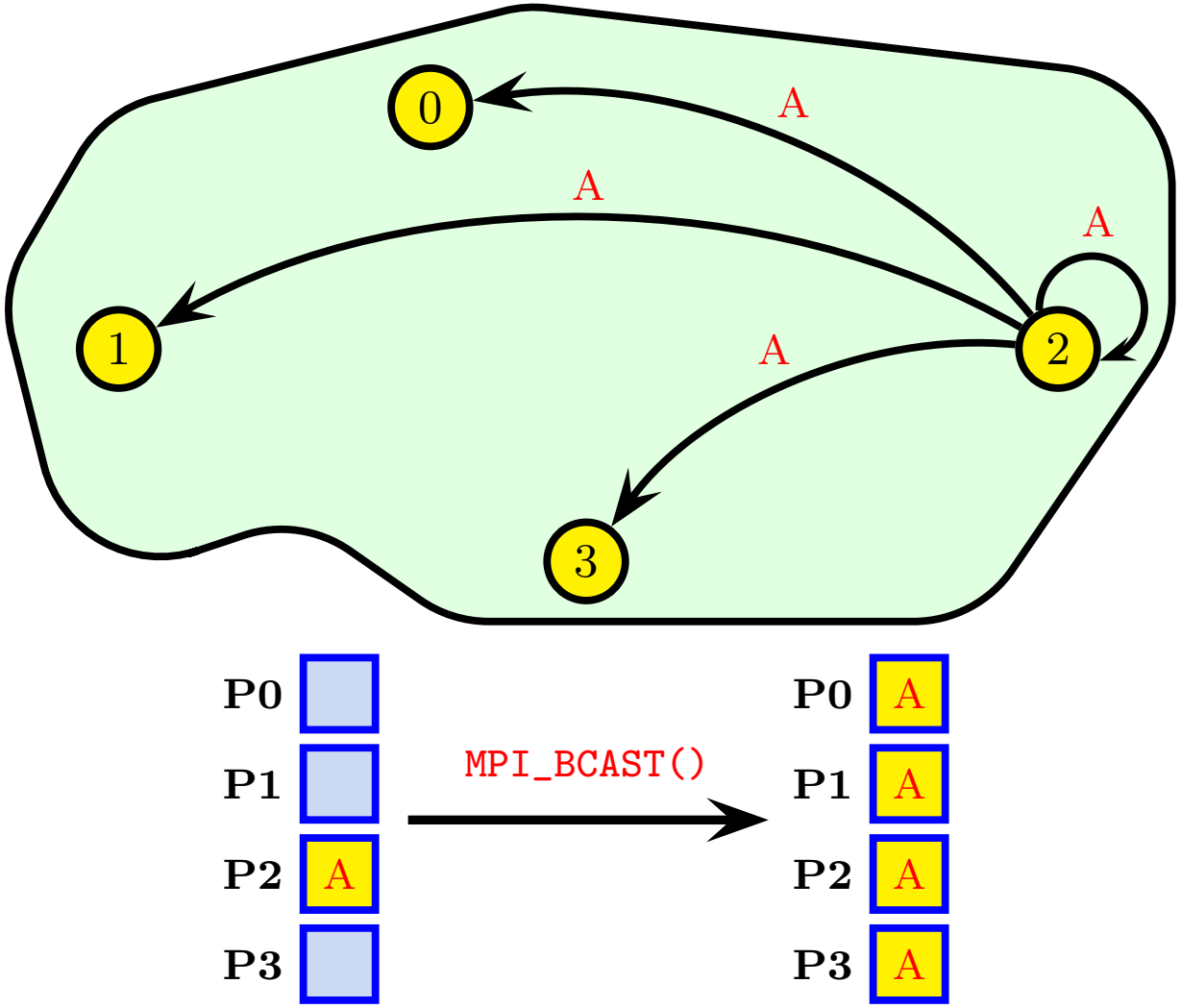

Figure 13 : Global distribution : MPI_BCAST()

Global distribution : MPI_BCAST()

```
MPI_BCAST(buffer, count, datatype, root, comm, code)

<type> :: buffer
integer :: count, datatype, root, comm, code
```

1. Send, starting at position buffer, a message of count element of type datatype, by the root process, to all the members of communicator comm.
2. Receive this message at position message for all the processes other than the root.

```
1  program bcast
2    use mpi
3    implicit none
4
5    integer :: rank,value,code
6
7    call MPI_INIT(code)
8    call MPI_COMM_RANK(MPI_COMM_WORLD,rank,code)
9
10   if (rank == 2) value=rank+1000
11
12   call MPI_BCAST(value,1,MPI_INTEGER,2,MPI_COMM_WORLD,code)
13
14   print *,'I, process ',rank,' received ',value,' of process 2'
15
16   call MPI_FINALIZE(code)
17
18 end program bcast
```

```
> mpiexec -n 4 bcast

I, process 2 received 1002 of process 2
I, process 0 received 1002 of process 2
I, process 1 received 1002 of process 2
I, process 3 received 1002 of process 2
```

4 – Collective communications
4.4 – Selective distribution: MPI_SCATTER()

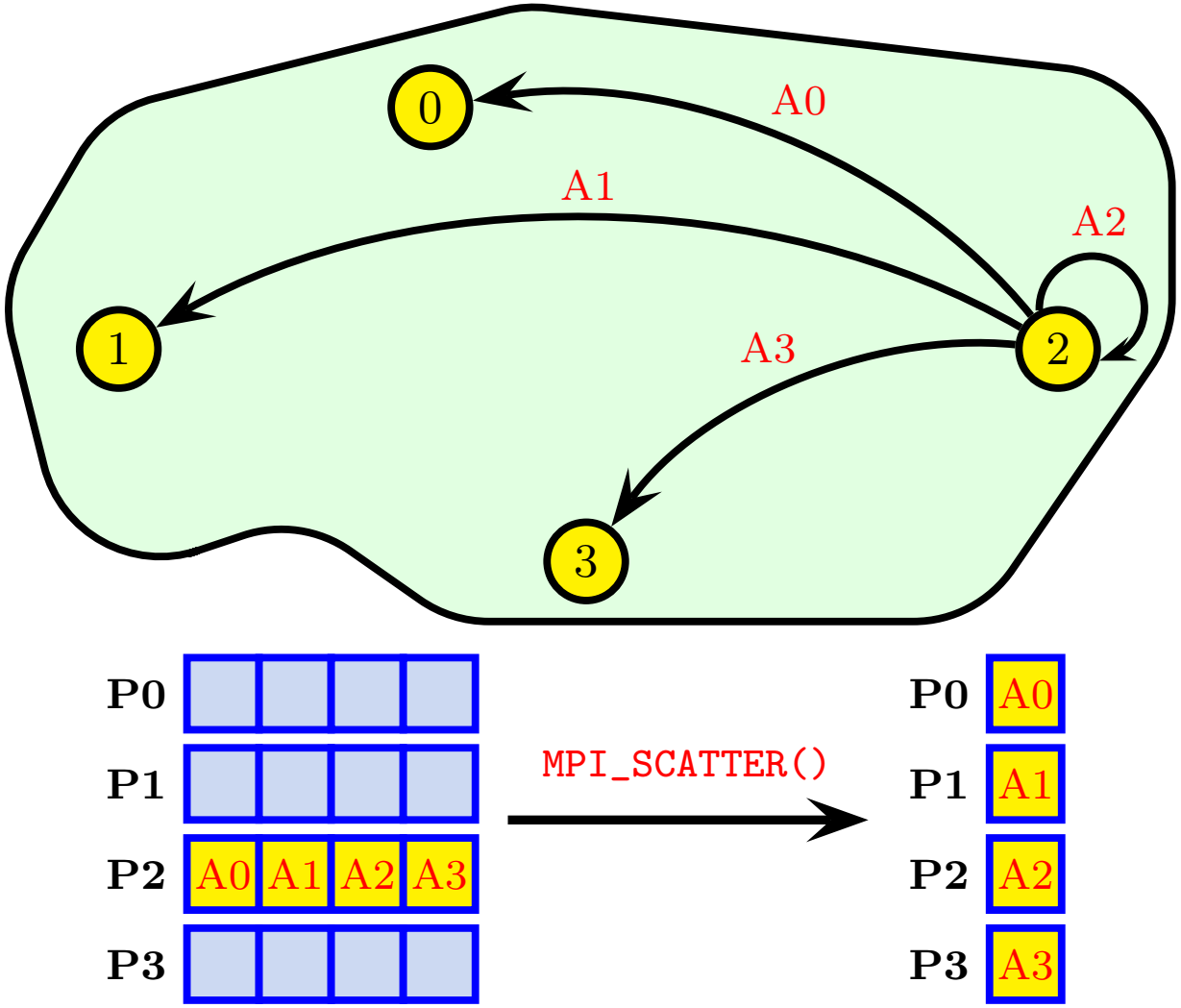

Figure 14 : Selected distribution : MPI_SCATTER()

Selective distribution : MPI_SCATTER()

```
MPI_SCATTER(sendbuf,sendcount,sendtype,
            recvbuf,recvcount,recvtype,root,comm,code)

<type>  :: sendbuf, recvbuf
integer :: sendcount, recvcount
integer :: sendtype, recvtype
integer :: root, comm, code
```

1. Scatter by process root, starting at position sendbuf, message sendcount element of type sendtype, to all the processes of communicator comm.
2. Receive this message at position recvbuf, of recvcount element of type recvtype for all processes of communicator comm.

Remarks:

- The couples (sendcount, sendtype) and (recvcount, recvtype) must represent the same quantity of data.
- Data are scattered in chunks of same size; a chunk consists of sendcount elements of type sendtype.
- The i-th chunk is sent to the i-th process.

```
program scatter
  use mpi
  implicit none

  integer, parameter                :: nb_values=8
  integer                           :: nb_procs,rank,block_length,i,code
  real, allocatable, dimension(:) :: values,data

  call MPI_INIT(code)
  call MPI_COMM_SIZE(MPI_COMM_WORLD,nb_procs,code)
  call MPI_COMM_RANK(MPI_COMM_WORLD,rank,code)
  block_length=nb_values/nb_procs
  allocate(data(block_length))

  if (rank == 2) then
     allocate(values(nb_values))
     values(:)=(/(1000.+i,i=1,nb_values)/)
     print *,'I, process ',rank,'send my values  array : ',&
              values(1:nb_values)
  end if

  call MPI_SCATTER(values,block_length,MPI_REAL,data,block_length, &
                   MPI_REAL,2,MPI_COMM_WORLD,code)
  print *,'I, process ',rank,', received ', data(1:block_length), &
          ' of process 2'
  call MPI_FINALIZE(code)

end program scatter
```

```
> mpiexec -n 4 scatter
I, process 2 send my values array :
1001. 1002. 1003. 1004. 1005. 1006. 1007. 1008.

I, process 0, received 1001. 1002. of process 2
I, process 1, received 1003. 1004. of process 2
I, process 3, received 1007. 1008. of process 2
I, process 2, received 1005. 1006. of process 2
```

4 – Collective communications
4.5 – Collection : MPI_GATHER()

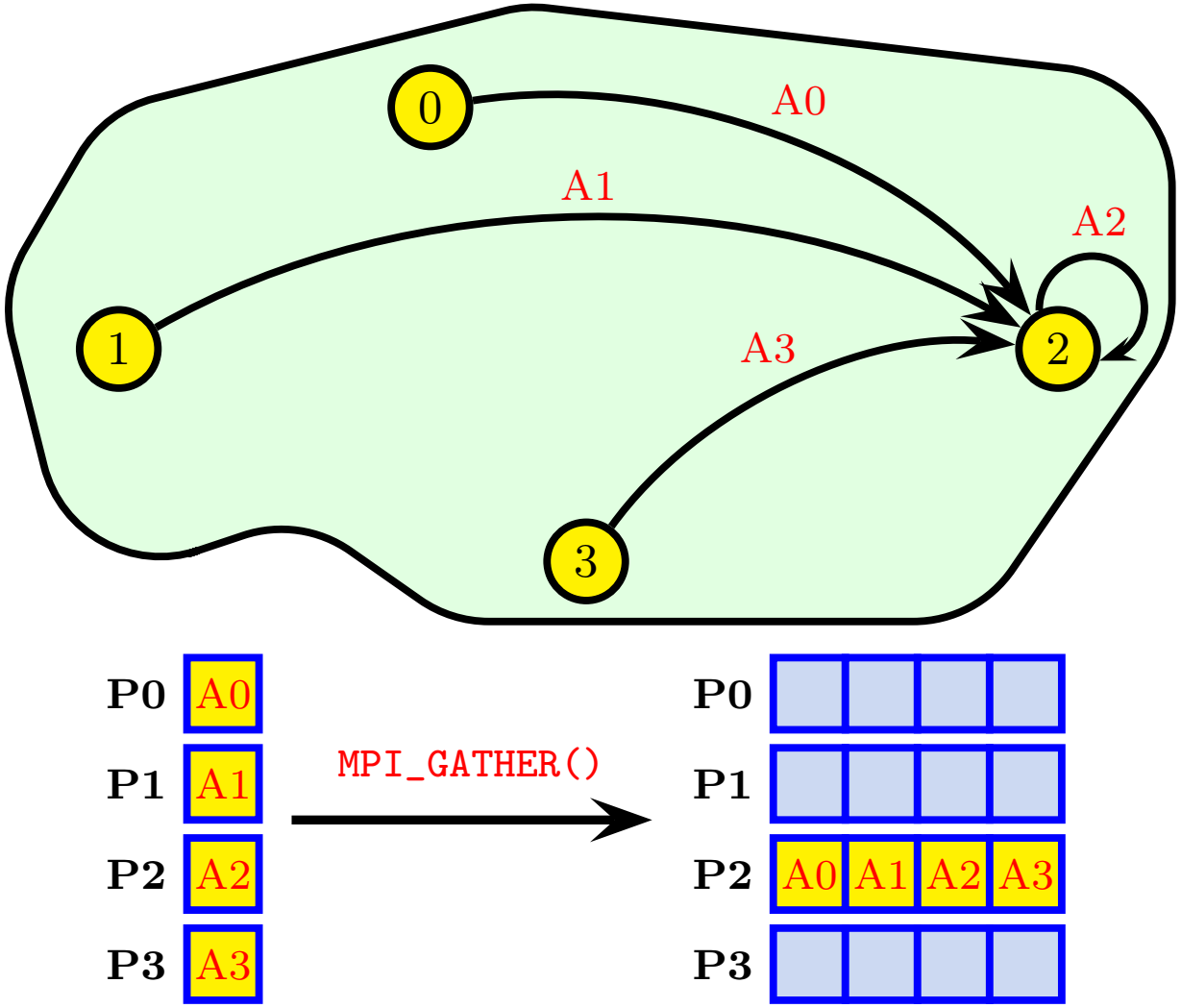

Figure 15 : Collection: MPI_GATHER()

Collection: MPI_GATHER()

```
MPI_GATHER(sendbuf,sendcount,sendtype,
           recvbuf,recvcount,recvtype,root,comm,code)

<type>  :: sendbuf, recvbuf
integer :: sendcount, recvcount
integer :: sendtype, recvtype
integer :: root, comm, code
```

1. Send for each process of communicator comm, a message starting at position sendbuf, of sendcount element type sendtype.
2. Collect all these messages by the root process at position recvbuf, recvcount element of type recvtype.

Remarks:

- The couples (sendcount, sendtype) and (recvcount, recvtype) must represent the same size of data.
- The data are collected in the order of the process ranks.

```
program gather
  use mpi
  implicit none
  integer, parameter                :: nb_values=8
  integer                           :: nb_procs,rank,block_length,i,code
  real, dimension(nb_values)        :: data
  real, allocatable, dimension(:)   :: values

  call MPI_INIT(code)
  call MPI_COMM_SIZE(MPI_COMM_WORLD,nb_procs,code)
  call MPI_COMM_RANK(MPI_COMM_WORLD,rank,code)

  block_length=nb_values/nb_procs

  allocate(values(block_length))

  values(:)=(/(1000.+rank*block_length+i,i=1,block_length)/)
  print *,'I, process ',rank,'sent my values array : ',&
              values(1:block_length)

  call MPI_GATHER(values,block_length,MPI_REAL,data,block_length, &
                  MPI_REAL,2,MPI_COMM_WORLD,code)

  if (rank == 2) print *,'I, process 2', ' received ',data(1:nb_values)

  call MPI_FINALIZE(code)

end program gather
```

```
> mpiexec -n 4 gather
I, process 1 sent my values array :1003. 1004.
I, process 0 sent my values array :1001. 1002.
I, process 2 sent my values array :1005. 1006.
I, process 3 sent my values array :1007. 1008.

I, process 2 received 1001. 1002. 1003. 1004. 1005. 1006. 1007. 1008.
```

4 – Collective communications

4.6 – Gather-to-all : MPI_ALLGATHER()

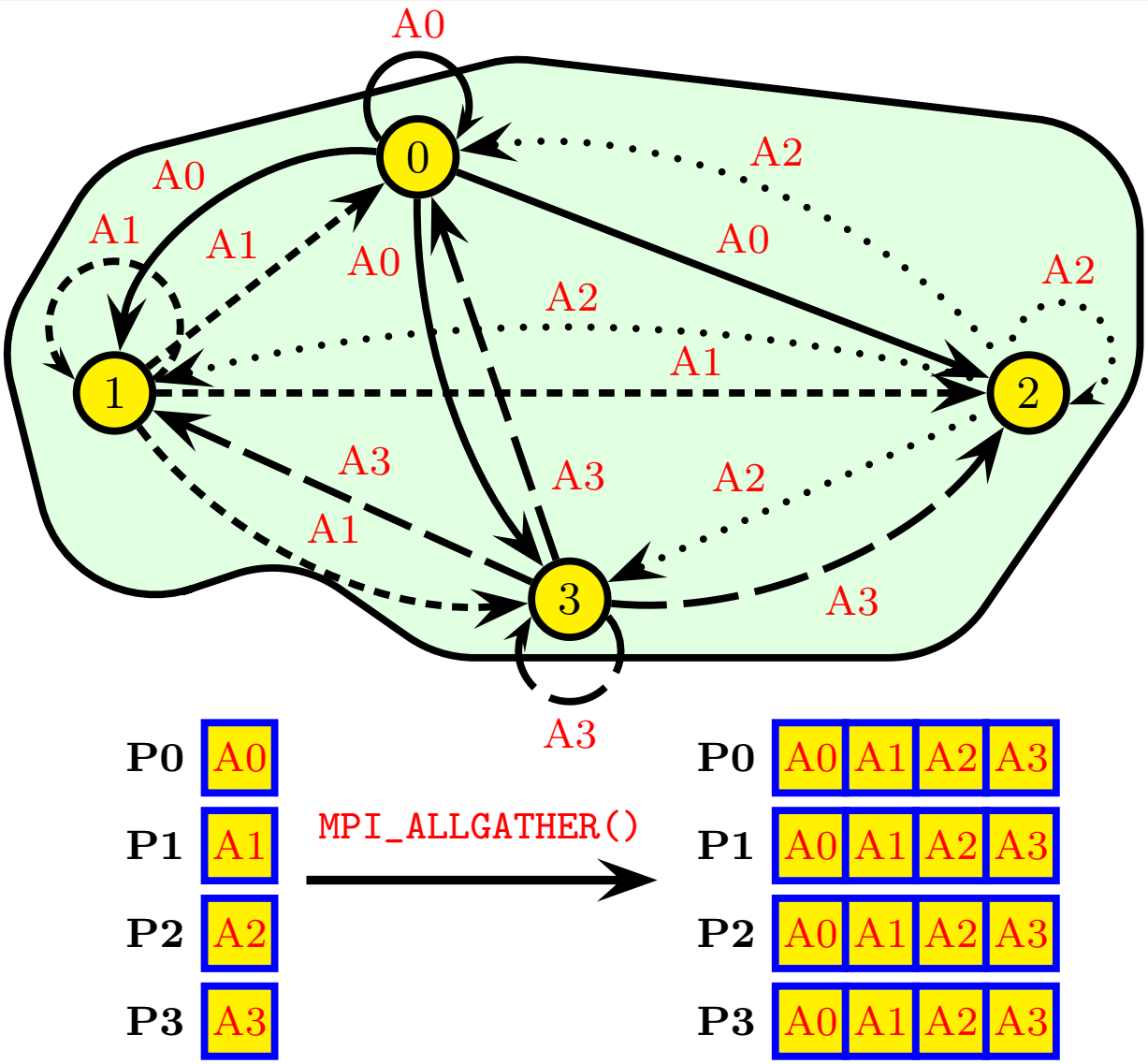

Figure 16 : Gather-to-all: MPI_ALLGATHER()

Gather-to-all : MPI_ALLGATHER()

Corresponds to an MPI_GATHER() followed by an MPI_BCAST() :

```
MPI_ALLGATHER(sendbuf,sendcount,sendtype,
              recvbuf,recvcount,recvtype,comm,code)

<type>  :: sendbuf, recvbuf
integer :: sendcount, recvcount
integer :: sendtype, recvtype
integer :: comm, code
```

1. Send by each processus of communicator comm, a message starting at position sendbuf, of sendcount element, type sendtype.
2. Collect all these messages, by all the processes, at position recvbuf of recvcount element type recvtype.

Remarks:

- The couples (sendcount, sendtype) and (recvcount, recvtype) must represent the same data size.
- The data are gathered in the order of the process ranks.

```
1  program allgather
2    use mpi
3    implicit none
4
5    integer, parameter                :: nb_values=8
6    integer                           :: nb_procs,rank,block_length,i,code
7    real, dimension(nb_values)        :: data
8    real, allocatable, dimension(:)   :: values
9
10   call MPI_INIT(code)
11
12   call MPI_COMM_SIZE(MPI_COMM_WORLD,nb_procs,code)
13   call MPI_COMM_RANK(MPI_COMM_WORLD,rank,code)
14
15   block_length=nb_values/nb_procs
16   allocate(values(block_length))
17
18   values(:)=(/(1000.+rank*block_length+i,i=1,block_length)/)
19
20   call MPI_ALLGATHER(values,block_length,MPI_REAL,data,block_length, &
21                      MPI_REAL,MPI_COMM_WORLD,code)
22
23   print *,'I, process ',rank,', received ', data(1:nb_values)
24
25   call MPI_FINALIZE(code)
26
27 end program allgather
```

```
> mpiexec -n 4 allgather

I, process 1, received 1001. 1002. 1003. 1004. 1005. 1006. 1007. 1008.
I, process 3, received 1001. 1002. 1003. 1004. 1005. 1006. 1007. 1008.
I, process 2, received 1001. 1002. 1003. 1004. 1005. 1006. 1007. 1008.
I, process 0, received 1001. 1002. 1003. 1004. 1005. 1006. 1007. 1008.
```

4 – Collective communications
4.7 – Extended gather : MPI_GATHERV()

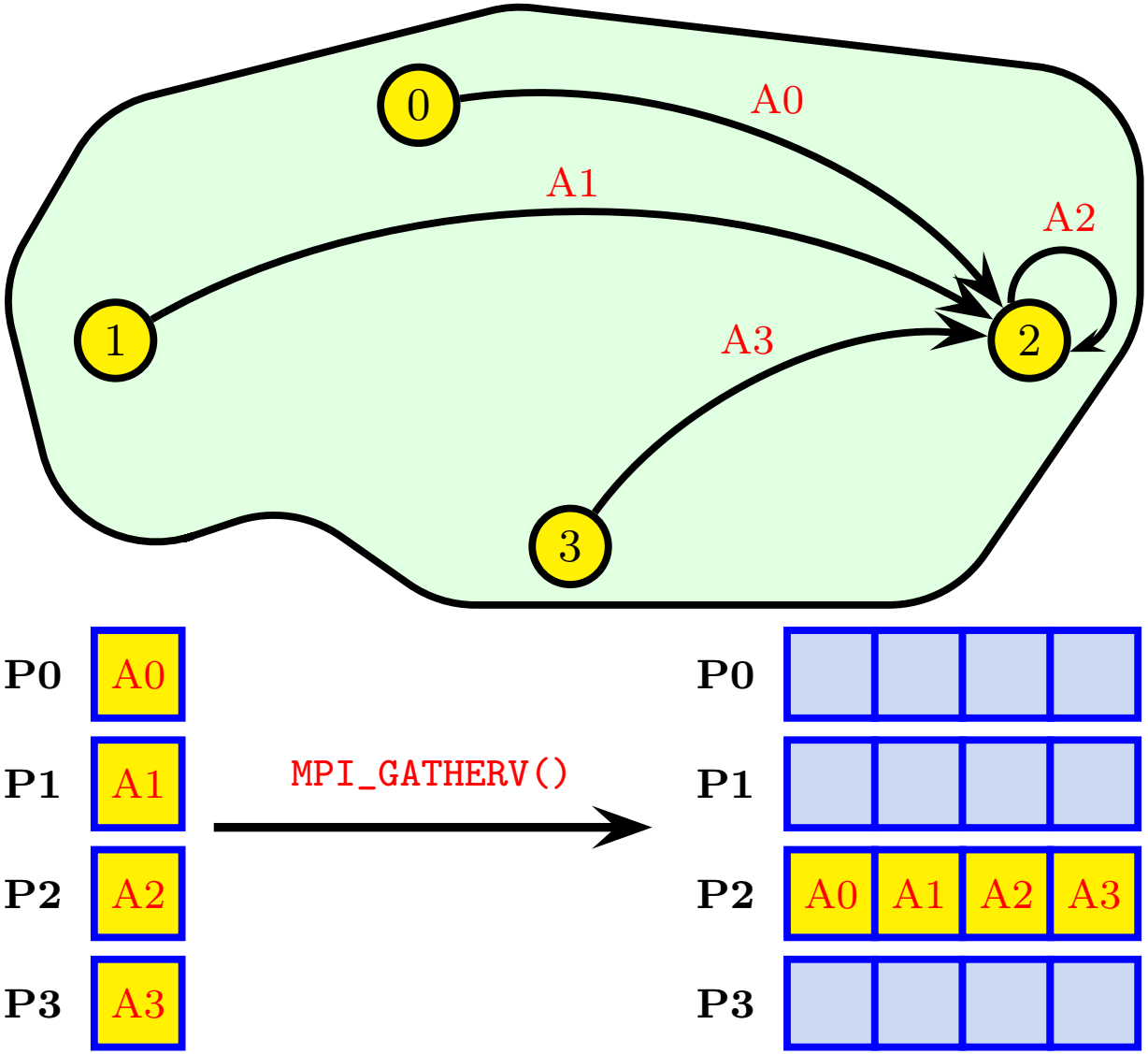

Figure 17 : Extended gather: MPI_GATHERV()

Extended Gather : MPI_GATHERV()

This is an MPI_GATHER() where the size of messages can be different among processes:

```
MPI_GATHERV(sendbuf,sendcount,sendtype,
            recvbuf,recvcounts,displs,recvtype,
            root,comm,code)

<type > :: sendbuf, recvbuf
integer :: sendcount
integer :: sendtype, recvtype
integer, dimension(:) :: recvcounts, displs
integer :: root, comm, code
```

The i-th process of the communicator comm sends to process root, a message starting at position sendbuf, of sendcount element of type sendtype, and receives at position recvbuf, of recvcounts(i) element of type recvtype, with a displacement of displs(i).

Remarks:

- The couples (sendcount,sendtype) of the i-th process and (recvcounts(i), recvtype) of processus root must be such that the data size sent and received is the same.

```
program gatherv
  use mpi
  implicit none
  INTEGER, PARAMETER                    :: nb_values=10
  INTEGER                               :: nb_procs, rank, block_length, i, code
  REAL, DIMENSION(nb_values)            :: data,remainder
  REAL, ALLOCATABLE, DIMENSION(:)       :: values
  INTEGER, ALLOCATABLE, DIMENSION(:) :: nb_elements_received,displacement

  CALL MPI_INIT(code)
  CALL MPI_COMM_SIZE(MPI_COMM_WORLD,nb_procs,code)
  CALL MPI_COMM_RANK(MPI_COMM_WORLD,rank,code)

  block_length=nb_values/nb_procs
  remainder=mod(nb_values,nb_procs)
  if(remainder > rank) block_length = block_length + 1
  ALLOCATE(values(block_length))
  values(:) = (/(1000.+(rank*(nb_values/nb_procs))+min(rank,remainder)+i, &
                 i=1,block_length)/)

  PRINT *, 'I, process ', rank,'sent my values array : ',&
       values(1:block_length)

  IF (rank == 2) THEN
     ALLOCATE(nb_elements_received(nb_procs),displacement(nb_procs))
     nb_elements_received(1) = nb_values/nb_procs
     if (remainder > 0) nb_elements_received(1)=nb_elements_received(1)+1
     displacement(1) = 0
     DO i=2,nb_procs
        displacement(i) = displacement(i-1)+nb_elements_received(i-1)
        nb_elements_received(i) = nb_values/nb_procs
        if (remainder > i-1) nb_elements_received(i)=nb_elements_received(i)+1
     END DO
  END IF

```

```
CALL MPI_GATHERV(values,block_length,MPI_REAL,data,nb_elements_received,&
       displacement,MPI_REAL,2,MPI_COMM_WORLD,code)
  IF (rank == 2) PRINT *, 'I, process 2, received  ', data (1:nb_values)
  CALL MPI_FINALIZE(code)
end program gatherv
```

```
> mpiexec -n 4 gatherv

 I, process  0 sent my values array :  1001.  1002.  1003.
 I, process  2 sent my values array :  1007.  1008.
 I, process  3 sent my values array :  1009.  1010.
 I, process  1 sent my values array :  1004.  1005.  1006.

 I, process 2 receives   1001.  1002.  1003.  1004.  1005.  1006.  1007.  1008.
1009.  1010.
```

4 – Collective communications

4.8 – Collection and distribution: MPI_ALLTOALL()

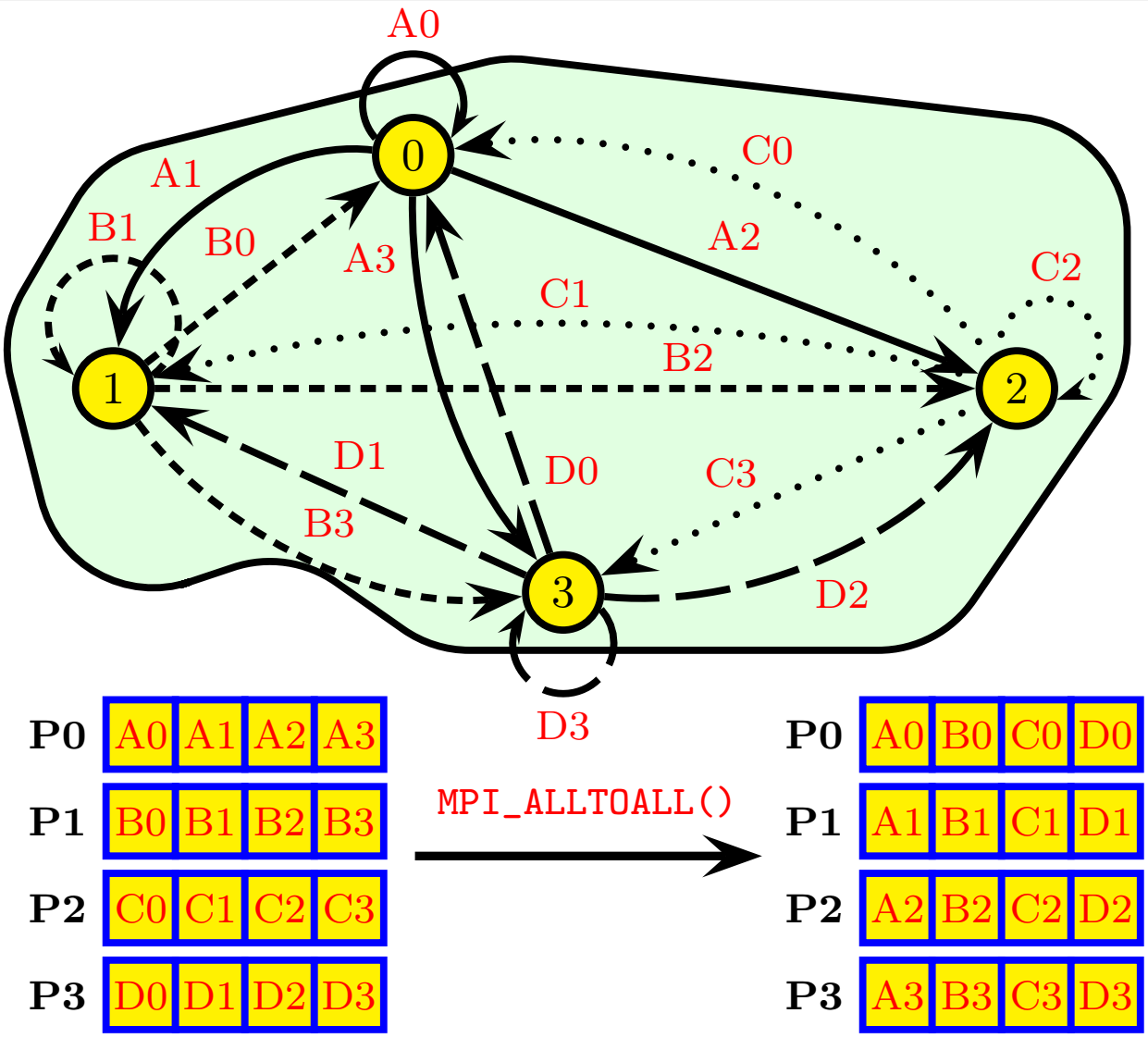

Figure 18 : Collection and distribution: MPI_ALLTOALL()

Collection and distribution: MPI_ALLTOALL()

```
MPI_ALLTOALL(sendbuf,sendcount,sendtype,
             recvbuf,recvcount,recvtype,comm,code)

<type>  :: sendbuf, recvbuf
integer :: sendcount, recvcount
integer :: sendtype, recvtype
integer :: comm, code
```

Like MPI_ALLGATHER() except that each process sends distinct data: The i-th process sends its j-th chunk to the j-th process which places it in its i-th chunk.

Remark:

- The couples (sendcount, sendtype) and (recvcount, recvtype) must be such that they represent equal data sizes.

```
program alltoall
  use mpi
  implicit none

  integer, parameter                :: nb_values=8
  integer                           :: nb_procs,rank,block_length,i,code
  real, dimension(nb_values)        :: values,data

  call MPI_INIT(code)
  call MPI_COMM_SIZE(MPI_COMM_WORLD,nb_procs,code)
  call MPI_COMM_RANK(MPI_COMM_WORLD,rank,code)

  values(:)=(/(1000.+rank*nb_values+i,i=1,nb_values)/)
  block_length=nb_values/nb_procs

  print *,'I, process ',rank,'sent my values array : ',&
              values(1:nb_values)

  call MPI_ALLTOALL(values,block_length,MPI_REAL,data,block_length, &
                    MPI_REAL,MPI_COMM_WORLD,code)

  print *,'I, process ',rank,', received ', data(1:nb_values)

  call MPI_FINALIZE(code)
end program alltoall
```

```
> mpiexec -n 4 alltoall
I, process 1 sent my values array :
1009. 1010. 1011. 1012. 1013. 1014. 1015. 1016.
I, process 0 sent my values array :
1001. 1002. 1003. 1004. 1005. 1006. 1007. 1008.
I, process 2 sent my values array :
1017. 1018. 1019. 1020. 1021. 1022. 1023. 1024.
I, process 3 sent my values array :
1025. 1026. 1027. 1028. 1029. 1030. 1031. 1032.

I, process 0, received 1001. 1002. 1009. 1010. 1017. 1018. 1025. 1026.
I, process 2, received 1005. 1006. 1013. 1014. 1021. 1022. 1029. 1030.
I, process 1, received 1003. 1004. 1011. 1012. 1019. 1020. 1027. 1028.
I, process 3, received 1007. 1008. 1015. 1016. 1023. 1024. 1031. 1032.
```

4 – Collective communications
4.9 – Global reduction

Global reduction

- A reduction is an operation applied to a set of elements in order to obtain one single value. Typical examples are the sum of the elements of a vector (`SUM(A(:))`) or the search for the maximum value element in a vector (`MAX(V(:))`).
- MPI proposes high-level subroutines in order to operate reductions on data distributed on a group of processes. The result is obtained on only one process (`MPI_REDUCE()`) or on all the processes (`MPI_ALLREDUCE()`, which is in fact equivalent to an `MPI_REDUCE()` followed by an `MPI_BCAST()`).
- If several elements are implied by process, the reduction function is applied to each one of them.
- The `MPI_SCAN()` subroutine also allows making partial reductions by considering, for each process, the previous processes of the communicator and itself.
- The `MPI_OP_CREATE()` and `MPI_OP_FREE()` subroutines allow personal reduction operations.

Operations

Table 3 : Main Predefined Reduction Operations (there are also other logical operations)

Name	Operation
MPI_SUM	Sum of elements
MPI_PROD	Product of elements
MPI_MAX	Maximum of elements
MPI_MIN	Minimum of elements
MPI_MAXLOC	Maximum of elements and location
MPI_MINLOC	Minimum of elements and location
MPI_LAND	Logical AND
MPI_LOR	Logical OR
MPI_LXOR	Logical exclusive OR

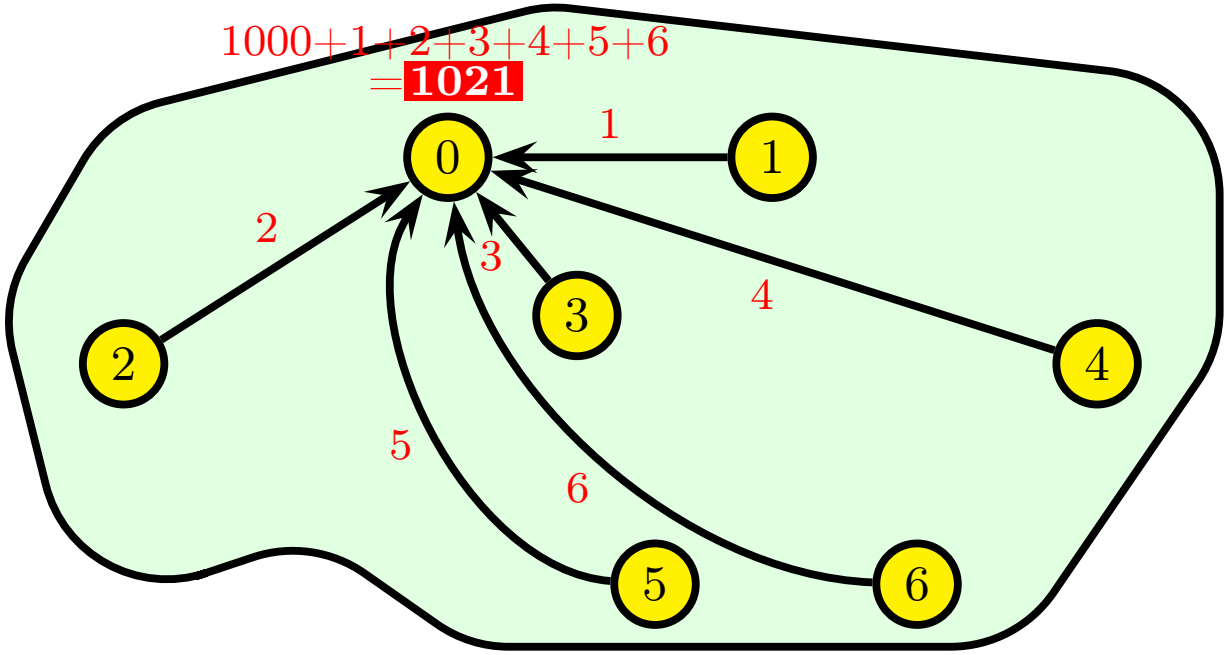

Figure 19 : Distributed reduction (sum)

Global reduction : MPI_REDUCE()

```
MPI_REDUCE(sendbuf,recvbuf,count,datatype,op,root,comm,code)

<type>  :: sendbuf, recvbuf
integer :: count, datatype, root
integer :: op, comm, code
```

1. Distributed reduction of count elements of type datatype, starting at position sendbuf, with the operation op from each process of the communicator comm,
2. Return the result at position recvbuf in the process root.

```
program reduce
  use mpi
  implicit none
  integer :: nb_procs,rank,value,sum,code

  call MPI_INIT(code)
  call MPI_COMM_SIZE(MPI_COMM_WORLD,nb_procs,code)
  call MPI_COMM_RANK(MPI_COMM_WORLD,rank,code)

  if (rank == 0) then
     value=1000
  else
     value=rank
  endif

  call MPI_REDUCE(value,sum,1,MPI_INTEGER,MPI_SUM,0,MPI_COMM_WORLD,code)

  if (rank == 0) then
     print *,'I, process 0, have the global sum value ',sum
  end if

  call MPI_FINALIZE(code)
end program reduce
```

```
> mpiexec -n 7 reduce

I, process 0, have the global sum value 1021
```

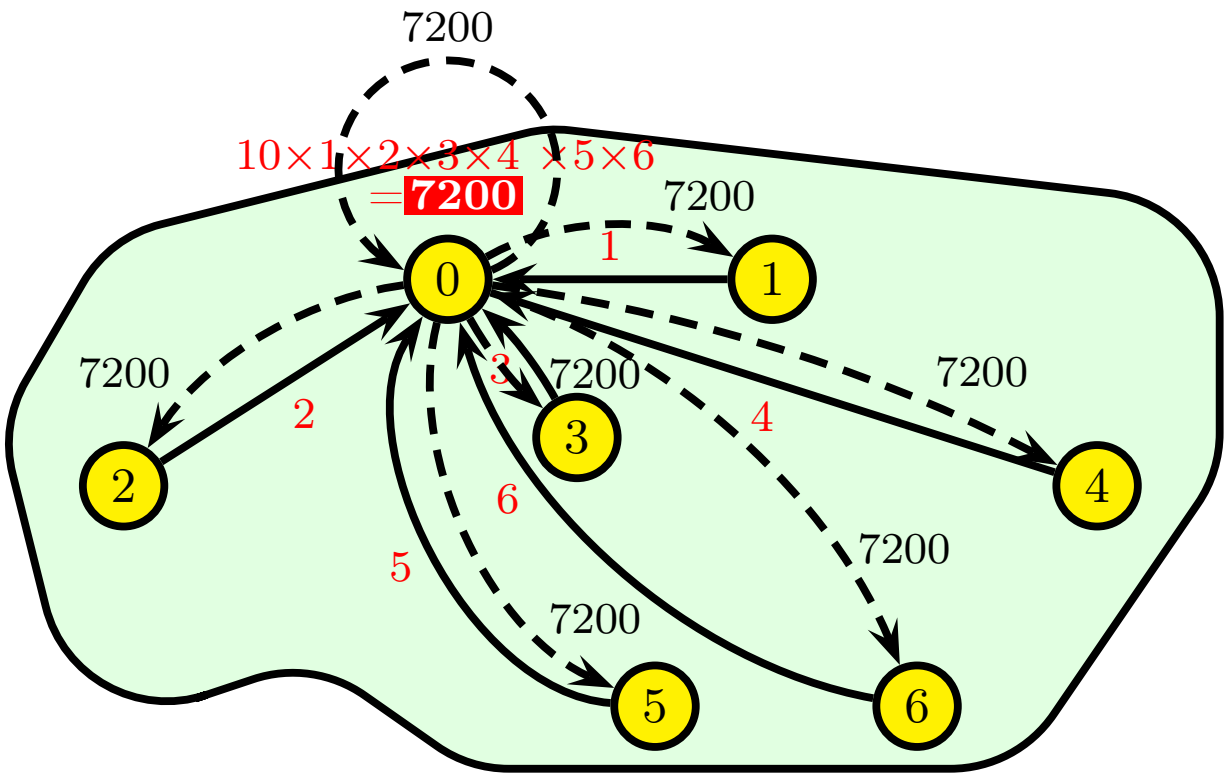

Figure 20 : Distributed reduction (product) with distribution of the result

Global all-reduction : MPI_ALLREDUCE()

```
MPI_ALLREDUCE(sendbuf,recvbuf,count,datatype,op,comm,code)

<type>  :: sendbuf, recvbuf
integer :: count, datatype
integer :: op, comm, code
```

1. Distributed reduction of count elements of type datatype starting at position sendbuf, with the operation op from each process of the communicator comm,
2. Write the result at position recvbuf for all the processes of the communicator comm.

```
program allreduce

  use mpi
  implicit none

  integer :: nb_procs,rank,value,product,code

  call MPI_INIT(code)
  call MPI_COMM_SIZE(MPI_COMM_WORLD,nb_procs,code)
  call MPI_COMM_RANK(MPI_COMM_WORLD,rank,code)

  if (rank == 0) then
     value=10
  else
     value=rank
  endif

  call MPI_ALLREDUCE(value,product,1,MPI_INTEGER,MPI_PROD,MPI_COMM_WORLD,code)

  print *,'I,process ',rank,', received the value of the global product ', product

  call MPI_FINALIZE(code)

end program allreduce
```

```
> mpiexec -n 7 allreduce

I, process 6, received the value of the global product 7200
I, process 2, received the value of the global product 7200
I, process 0, received the value of the global product 7200
I, process 4, received the value of the global product 7200
I, process 5, received the value of the global product 7200
I, process 3, received the value of the global product 7200
I, process 1, received the value of the global product 7200
```

4 – Collective communications
4.10 – Additions

Additions

- The MPI_SCATTERV(), MPI_GATHERV(), MPI_ALLGATHERV() and MPI_ALLTOALLV() subroutines extend MPI_SCATTER(), MPI_GATHER(), MPI_ALLGATHER() and MPI_ALLTOALL() in case the processes have different numbers of elements to transmit or gather.
- For each reduction operation, the keyword MPI_IN_PLACE can be used in order to keep the result in the same place as the sending buffer: `call` MPI_REDUCE`(`MPI_IN_PLACE`,recvbuf,...)` but only for rank that will receive results.
- Two new subroutines have been added to extend the possibilities of collective subroutines in some particular cases:
  - MPI_ALLTOALLW() : MPI_ALLTOALLV() version where the displacements are expressed in bytes and not in elements
  - MPI_EXSCAN() : exclusive version of MPI_SCAN()

5 – Communication Modes
5.1 – Point-to-Point Send Modes

Point-to-Point Send Modes

Mode	Blocking	Non-blocking
Standard send	`MPI_SEND()`	`MPI_ISEND()`
Synchronous send	`MPI_SSEND()`	`MPI_ISSEND()`
Buffered send	`MPI_BSEND()`	`MPI_IBSEND()`
Receive	`MPI_RECV()`	`MPI_IRECV()`

5 – Communication Modes
5.2 – Blocking call

Definition

- A call is blocking if the memory space used for the communication can be reused immediately after the exit of the call.
- The data sent can be modified after the call.
- The data received can be read after the call.

5 – Communication Modes
5.2 – Blocking call
5.2.1 – Synchronous Sends

Definition

A synchronous send involves a synchronization between the involved processes. A send cannot start until its receive is posted. There can be no communication before the two processes are ready to communicate.

Rendezvous Protocol

The rendezvous protocol is generally the protocol used for synchronous sends (implementation-dependent). The return receipt is optional.

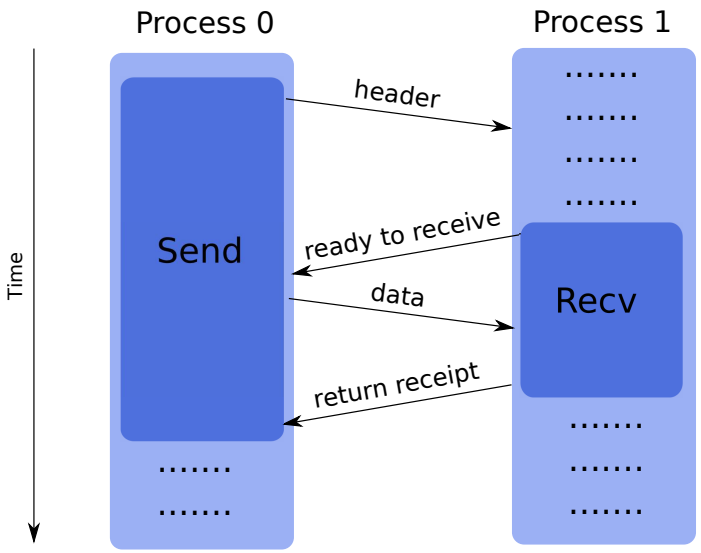

Interfaces

```
MPI_SSEND(values, count, type, dest, tag, comm, code)

TYPE(*), intent(in)  :: values
integer, intent(in)  :: count, type, dest, tag, comm
integer, intent(out) :: code
```

Advantages

- Low resource consumption (no buffer)
- Rapid if the receiver is ready (no copying in a buffer)
- Knowledge of reception through synchronization

Disadvantages

- Waiting time if the receiver is not there/not ready
- Risk of deadlocks

Deadlock example

In the following example, there is a deadlock because we are in synchronous mode. The two processes are blocked on the MPI_SSEND() call because they are waiting for the MPI_RECV() of the other process. However, the MPI_RECV() call can only be made after the unblocking of the MPI_SSEND() call.

```
1  program ssendrecv
2    use mpi
3    implicit none
4    integer                                :: rank,value,num_proc,code
5    integer,parameter                      :: tag=110
6
7    call MPI_INIT(code)
8    call MPI_COMM_RANK(MPI_COMM_WORLD,rank,code)
9
10   ! We run on 2 processes
11   num_proc=mod(rank+1,2)
12
13   call MPI_SSEND(rank+1000,1,MPI_INTEGER,num_proc,tag,MPI_COMM_WORLD,code)
14   call MPI_RECV(value,1,MPI_INTEGER, num_proc,tag,MPI_COMM_WORLD, &
15                 MPI_STATUS_IGNORE,code)
16
17   print *,'I, process',rank,', received',value,'from process',num_proc
18
19   call MPI_FINALIZE(code)
20 end program ssendrecv
```

5 – Communication Modes
5.2 – Blocking call
5.2.2 – Buffered sends

Definition

A buffered send implies the copying of data into an intermediate memory space. There is then no coupling between the two processes of communication. Therefore, the return of this type of send does not mean that the receive has occurred.

Protocol with user buffer on the sender side

In this approach, the buffer is on the sender side and is managed explicitly by the application. A buffer managed by MPI can exist on the receiver side. Many variants are possible. The return receipt is optional.

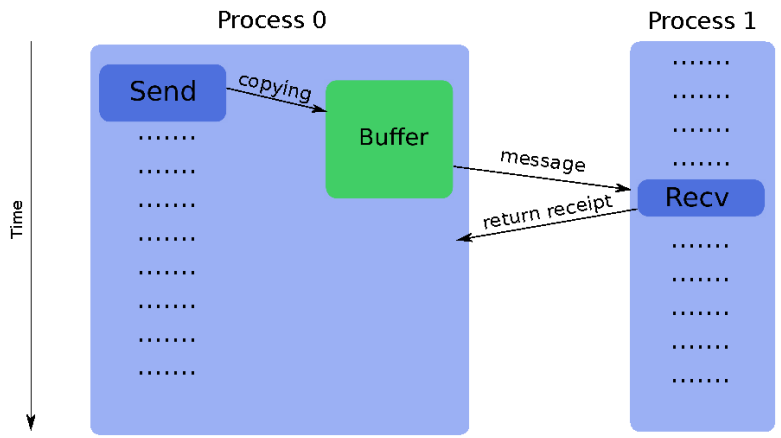

Buffered sends

The buffers have to be managed manually (with calls to MPI_BUFFER_ATTACH() and MPI_BUFFER_DETACH()). Message header size needs to be taken into account when allocating buffers (by adding the constant MPI_BSEND_OVERHEAD() for each message occurrence).

Interfaces

```
MPI_BUFFER_ATTACH (buf, size, code)
MPI_BSEND (values, count, type, dest, tag, comm, code)
MPI_BUFFER_DETACH (buf, size, code)

TYPE(*), intent(in)  :: values
integer, intent(in)  :: count, type, dest, tag, comm
integer, intent(out) :: code
TYPE(*) :: buf
integer :: size
```

The eager protocol

The eager protocol is often used for standard sends of small-size messages. It can also be used for sends with `MPI_BSEND()` for small messages (implementation-dependent) and by bypassing the user buffer on the sender side. In this approach, the buffer is on the receiver side. The return receipt is optional.

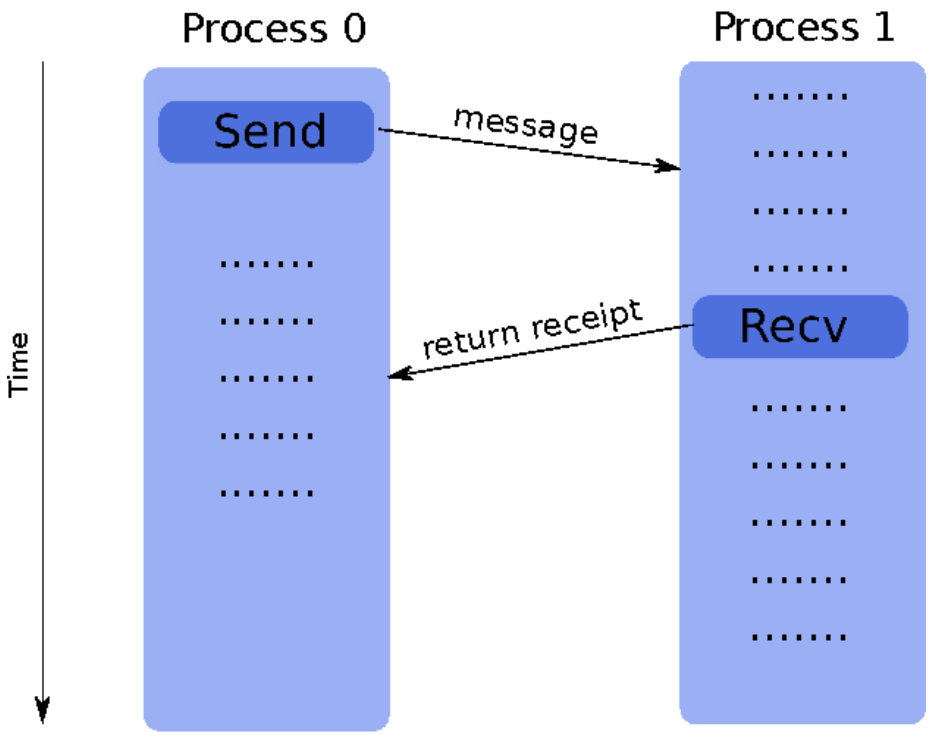

Advantages

- No need to wait for the receiver (copying in a buffer)
- No risk of deadlocks

Disadvantages

- Uses more resources (memory use by buffers with saturation risk)
- The send buffers in the `MPI_BSEND()` or `MPI_IBSEND()` calls have to be managed manually (often difficult to choose a suitable size)
- Slightly slower than the synchronous sends if the receiver is ready
- No knowledge of reception (send-receive decoupling)
- Risk of wasted memory space if buffers are too oversized
- Application crashes if buffer is too small
- There are often hidden buffers managed by the MPI implementation on the sender side and/or on the receiver side (and consuming memory resources)

No deadlocks

In the following example, we don't have a deadlock because we are in buffered mode. After the copy is made in the *buffer*, the MPI_BSEND() call returns and then the MPI_RECV() call is made.

```
program bsendrecv
  use mpi
  implicit none
  integer                                :: rank,value,num_proc,size,overhead,code
  integer,parameter                      :: tag=110, nb_elt=1
  integer,dimension(:), allocatable      :: buffer

  call MPI_INIT(code)
  call MPI_COMM_RANK(MPI_COMM_WORLD,rank,code)

  call MPI_TYPE_SIZE(MPI_INTEGER,size,code)
  ! Convert MPI_BSEND_OVERHEAD (bytes) in number of integer
  overhead = int(1+(MPI_BSEND_OVERHEAD*1.)/size)
  allocate(buffer(nb_elt+overhead))
  call MPI_BUFFER_ATTACH(buffer,size*(nb_elt+overhead),code)
  ! We run on 2 processes
  num_proc=mod(rank+1,2)
  call MPI_BSEND(rank+1000,nb_elt,MPI_INTEGER,num_proc,tag,MPI_COMM_WORLD,code)
  call MPI_RECV(value,nb_elt,MPI_INTEGER, num_proc,tag,MPI_COMM_WORLD, &
                MPI_STATUS_IGNORE,code)

  print *,'I, process', rank,', received', value, 'from process', num_proc
  call MPI_BUFFER_DETACH(buffer,size*(1+overhead),code)
  call MPI_FINALIZE(code)
end program bsendrecv
```

5 – Communication Modes
5.2 – Blocking call
5.2.3 – Standard sends

Standard sends

A standard send is made by calling the MPI_SEND() subroutine. In most implementations, the buffered mode switches to synchronous mode when the message size is large.

Interfaces

```
MPI_SEND(values, count, type, dest, tag, comm, code)

TYPE(*), intent(in)  :: values
integer, intent(in)  :: count, type, dest, tag, comm
integer, intent(out) :: code
```

Advantages

- Often the most efficient (because the constructor chose the best parameters and algorithms)
- The most portable for performance

Disadvantages

- Little control over the mode actually used (often accessible via environment variables)
- Risk of deadlocks depending on the mode used
- Behavior can vary according to the architecture and problem size

5 – Communication Modes
5.3 – Nonblocking communication

Presentation

The overlap of communications by computations is a method which allows executing communications operations in the background while the program continues to operate. On Ada, the latency of a communication internode is 1.5 μs, or 4000 processor cycles.

- It is thus possible, if the hardware and software architecture allows it, to hide all or part of communications costs.
- The computation-communication overlap can be seen as an additional level of parallelism.
- This approach is used in MPI by using nonblocking subroutines (i.e. `MPI_ISEND()`, `MPI_IRECV()` and `MPI_WAIT()`).

Definition

A nonblocking call returns very quickly but it does not authorize the immediate re-use of the memory space which was used in the communication. It is necessary to make sure that the communication is fully completed (with `MPI_WAIT()`, for example) before using it again.

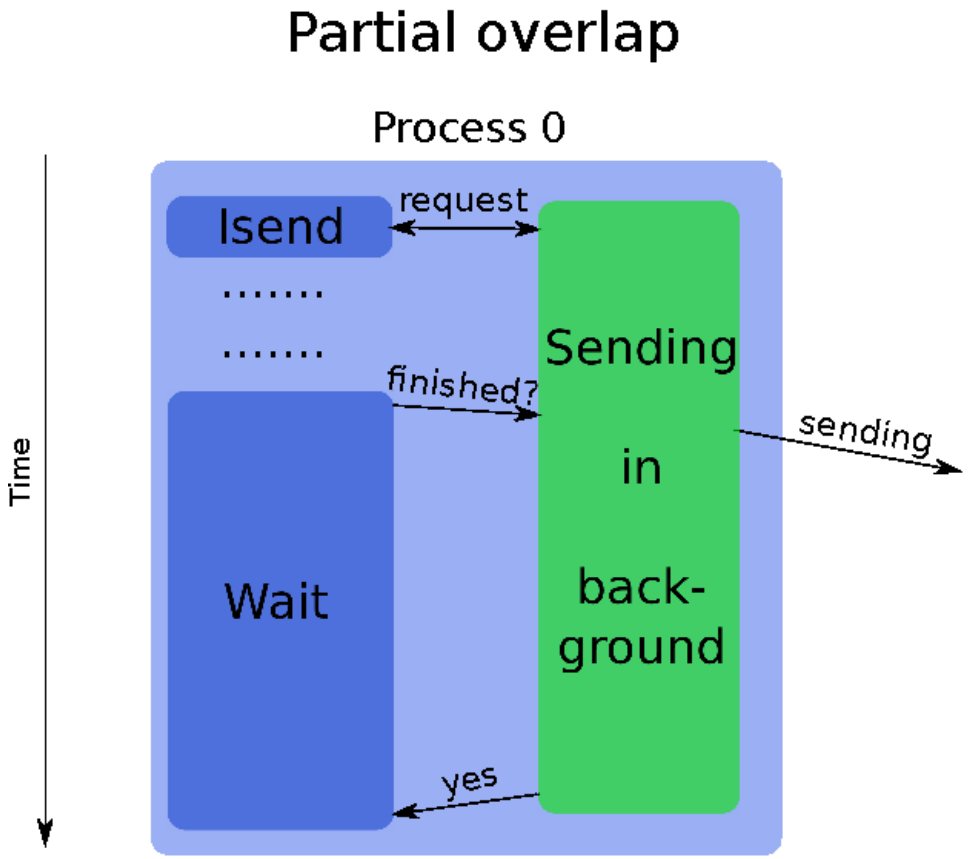
Partial overlap
Process 0
Time
Isend
request
.....
.....
finished?
Wait
Sending
in
back-
ground
sending
yes

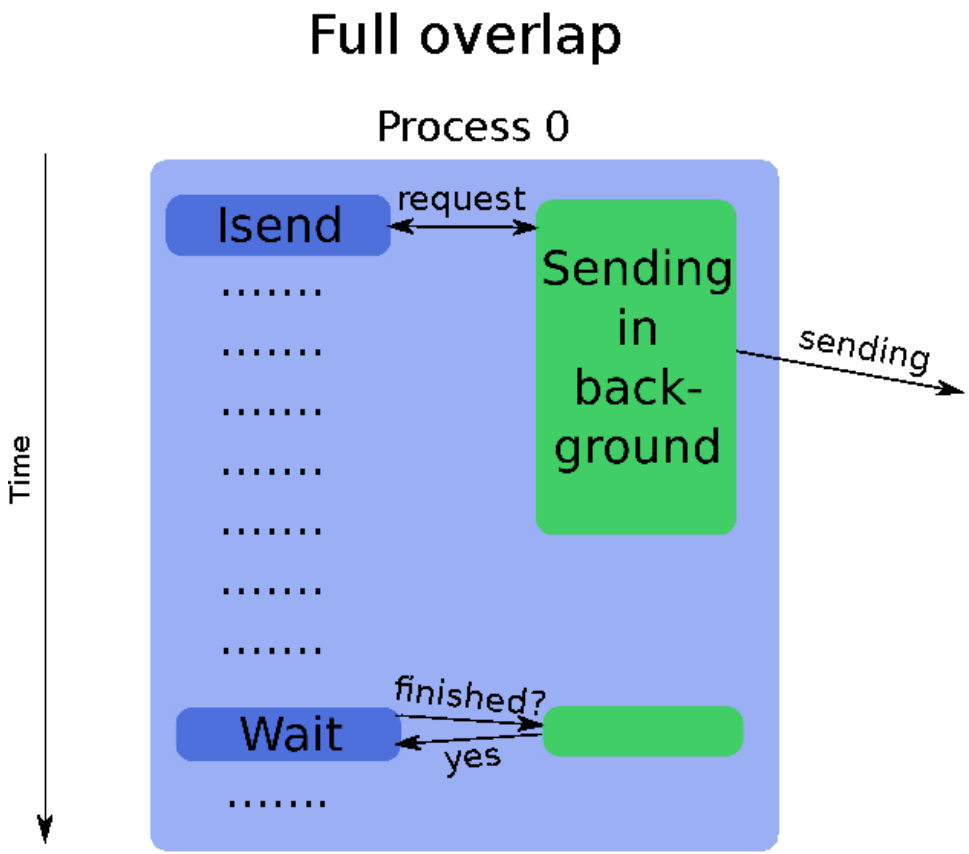
Full overlap
Process 0
Time
Isend
request
.....
.....
.....
.....
.....
.....
.....
Sending
in
back-
ground
sending
finished?
Wait
yes
.....

Advantages

- Possibility of hiding all or part of communications costs (if the architecture allows it)
- No risk of deadlock

Disadvantages

- Greater additional costs (several calls for one single send or receive, request management)
- Higher complexity and more complicated maintenance
- Less efficient on some machines (for example with transfer starting only at the `MPI_WAIT()` call)
- Risk of performance loss on the computational kernels (for example, differentiated management between the area near the border of a domain and the interior area, resulting in less efficient use of memory caches)
- Limited to point-to-point communications (it is extended to collective communications in MPI 3.0)

Interfaces

MPI_ISEND() MPI_ISSEND() and MPI_IBSEND() for nonblocking send

```
MPI_ISEND(values, count, datatype, dest, tag, comm, req, code)
MPI_ISSEND(values, count, datatype, dest, tag, comm, req, code)
MPI_IBSEND(values, count, datatype, dest, tag, comm, req, code)

TYPE(*), intent(in)  :: values
integer, intent(in)  ::count, datatype, dest, tag, comm
integer, intent(out) :: req, code
```

MPI_IRECV() for nonblocking receive.

```
MPI_IRECV(values, count, type, source, tag, comm, req, code)

TYPE(*), intent(in)  :: values
integer, intent(in)  :: count, type, source, tag, comm
integer, intent(out) :: req, code
```

Interfaces

MPI_WAIT() wait for the end of a communication, MPI_TEST() is the nonblocking version.

```
MPI_WAIT(req, statut, code)
MPI_TEST(req, flag, statut, code)

integer, intent(inout) :: req
integer, dimension(MPI_STATUS_SIZE), intent(out) :: statut
integer, intent(out) :: code
logical, intent(out) :: flag
```

MPI_WAITALL() (MPI_TESTALL()) await the end of all communications.

```
MPI_WAITALL(count, reqs, statuts, code)
MPI_TESTALL(count, reqs, statuts, flag, code)

integer, intent(in) :: count
integer, dimension(count) :: reqs
integer, dimension(MPI_STATUS_SIZE,count), intent(out) :: statuts
integer, intent(out) :: code
logical, intent(out) :: flag
```

Interfaces

MPI_WAITANY() wait for the end of one communication, MPI_TESTANY() is the nonblocking version.

```
MPI_WAITANY(size, reqs, index, status, code)
MPI_TESTANY(size, reqs, index, flag, status, code)

integer, intent(in) :: size
integer, dimension(size), intent(inout) :: reqs
integer, intent(out) :: index
integer, dimension(MPI_STATUS_SIZE), intent(out) :: status
integer, intent(out) :: code
logical, intent(out) :: flag
```

MPI_WAITSOME() wait for the end of at least one communication, MPI_TESTSOME() is the nonblocking version.

```
MPI_WAITSOME(size, reqs, outcount, indices, statuses, code)
MPI_TESTSOME(size, reqs, outcount, indices, statuses, code)

integer, intent(in) :: size
integer, dimension(size) :: reqs
integer, intent(out) :: outcount
integer, dimension(taille) :: indices
integer, dimension(MPI_STATUS_SIZE,size), intent(out) :: statuses
integer, intent(out) :: code
```

Request management

- After a call to a blocking wait function (`MPI_WAIT()`, `MPI_WAITALL()`,...), the request argument is set to `MPI_REQUEST_NULL`.
- The same for a nonblocking wait when the *flag* is set to true.
- A wait call with a `MPI_REQUEST_NULL` request does nothing.

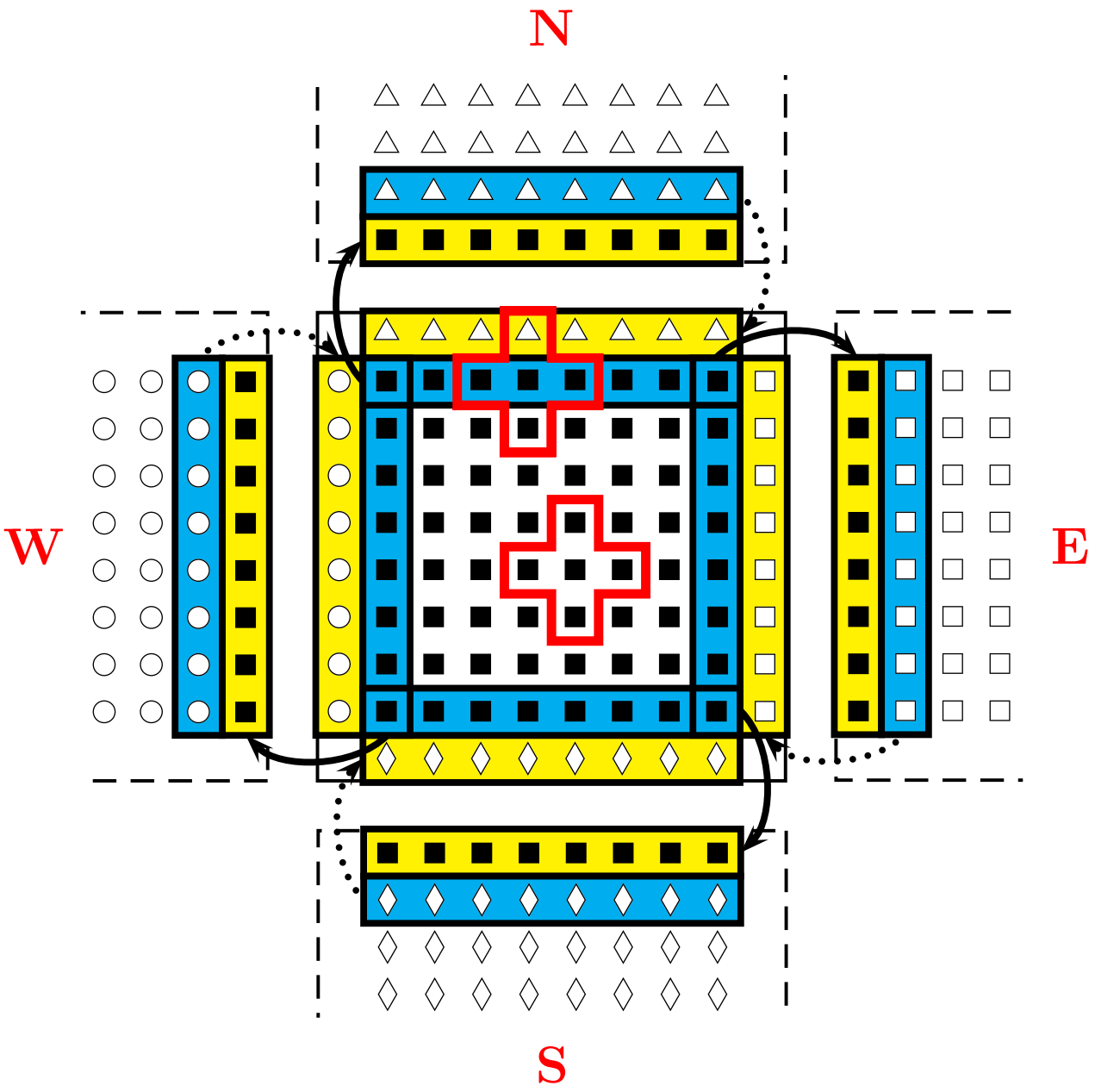
N
W
E
S

```
SUBROUTINE start_communication(u)
  ! Send to the North and receive from the South
  CALL MPI_IRECV( u(,), 1, rowtype, neighbor(S), &
       tag, comm2d, request(1), code)
  CALL MPI_ISEND( u(,), 1, rowtype, neighbor(N), &
       tag, comm2d, request(2), code)

  ! Send to the South and receive from the North
  CALL MPI_IRECV( u(,), 1,rowtype, neighbor(N), &
       tag, comm2d, request(3), code)
  CALL MPI_ISEND(  u(,), 1,rowtype,neighbor(S), &
       tag, comm2d, request(4),code)

  ! Send to the West and receive from the East
  CALL MPI_IRECV( u(,), 1, columntype, neighbor(E), &
       tag, comm2d, request(5), code)
  CALL MPI_ISEND( u(,), 1, columntype, neighbor(W), &
       tag, comm2d, request(6),code)

  ! Send to the East and receive from the West
  CALL MPI_IRECV( u(,), 1, columntype, neighbor(W), &
       tag, comm2d, request(7),code)
  CALL MPI_ISEND( u(,), 1, columntype, neighbor(E), &
       tag, comm2d, request(8),code)
END SUBROUTINE start_communication
SUBROUTINE end_communication(u)
  CALL MPI_WAITALL(2*NB_NEIGHBORS,request,tab_status,code)
END SUBROUTINE end_communication
```

```
DO WHILE ((.NOT. convergence) .AND. (it < it_max))
  it = it +1
  u(sx:ex,sy:ey) = u_new(sx:ex,sy:ey)

  ! Exchange value on the interfaces
  CALL start_communication( u )

  ! Compute u
  CALL calcul( u, u_new, sx+1, ex-1, sy+1, ey-1)

  CALL end_communication( u )

  ! North
  CALL calcul( u, u_new, sx, sx, sy, ey)
  ! South
  CALL calcul( u, u_new, ex, ex, sy, ey)
  ! West
  CALL calcul( u, u_new, sx, ex, sy, sy)
  ! East
  CALL calcul( u, u_new, sx, ex, ey, ey)

  ! Compute global error
  diffnorm =  global_error (u, u_new)

  convergence = ( diffnorm < eps )

END DO
```

Overlap levels on different machines

Machine	*Level*
Blue Gene/Q, PAMID_THREAD_MULTIPLE=0	32%
Blue Gene/Q, PAMID_THREAD_MULTIPLE=1	100%
Ada+POE	37%
Ada+POE MP_CSS_INTERRUPT=yes	85%
Ada+IntelMPI I_MPI_ASYNC_PROGRESS=no	4%
Ada+IntelMPI I_MPI_ASYNC_PROGRESS=yes	94%

Measurements taken by overlapping a compute kernel with a communication kernel which have the same execution times and using different communication methods (intra/extra-nodes, by pairs, random processes, ...). The results can be totally different depending on the communication scenario used.

An overlap of 0% means that the total execution time is twice the time of a compute (or a communication) kernel.
An overlap of 100% means that the total execution time is the same as the time of a compute (or a communication) kernel.

Number of received elements

```
MPI_RECV(buf,count,datatype,source,tag,comm,status,code)

<type>:: buf
integer :: count, datatype
integer :: source, tag, comm, code
integer, dimension(MPI_STATUS_SIZE) :: status
```

- In MPI_RECV() or MPI_IRECV() call, the count argument in the standard is the number of elements in the buffer buf.
- This number must be greater than the number of elements to be received.
- When it is possible, for increased clarity, it is adviced to put the number of elements to be received.
- We can obtain the number of elements received with MPI_GET_COUNT() and the status argument returned by the MPI_RECV() or MPI_WAIT() call.

```
MPI_GET_COUNT(status,type,count,code)

integer, INTENT(IN) :: type
integer, INTENT(OUT) :: count, code
integer, dimension(MPI_STATUS_SIZE), INTENT(IN) :: status
```

5 – Communication Modes
5.5 – One-Sided Communications

Definition

One-sided communications (Remote Memory Access or RMA) consists of accessing the memory of a distant process in *read* or *write* without the distant process having to manage this access explicitly. The target process does not intervene during the transfer.

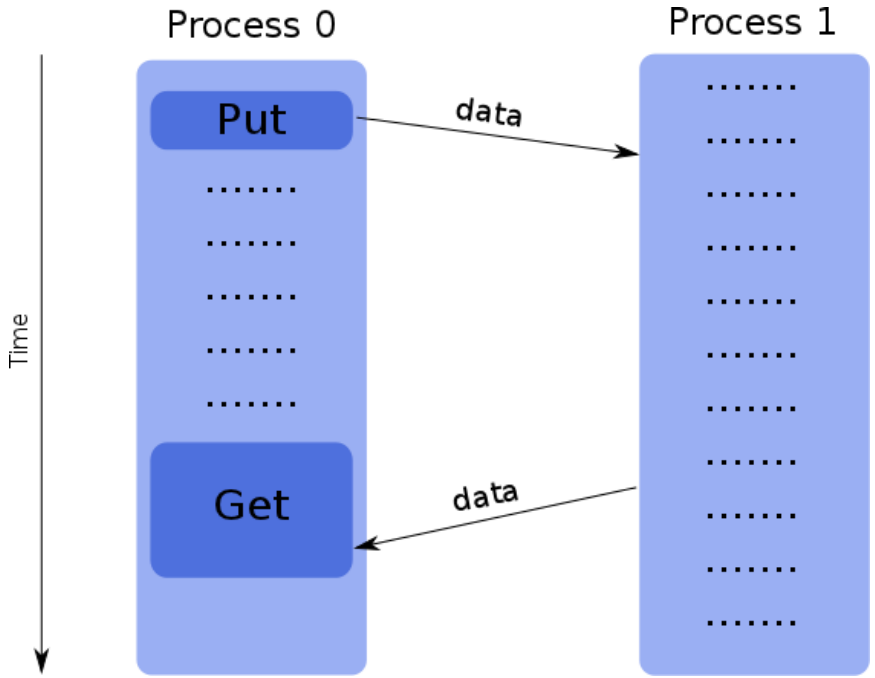

5 – Communication Modes
5.5 – One-Sided Communications

General approach

- Creation of a memory window with `MPI_WIN_CREATE()` to authorize RMA transfers in this zone.
- Remote access in *read* or *write* by calling `MPI_PUT()`, `MPI_GET()` or `MPI_ACCUMULATE()`.
- Free the memory window with `MPI_WIN_FREE()`.

Synchronization methods

In order to ensure the correct functioning of the application, it is necessary to execute some synchronizations. Three methods are available:

- Active target communication with global synchronization (`MPI_WIN_FENCE()`)
- Active target communication with synchronization by pair (`MPI_WIN_START()` and `MPI_WIN_COMPLETE()` for the origin process; `MPI_WIN_POST()` and `MPI_WIN_WAIT()` for the target process)
- Passive target communication without target intervention (`MPI_WIN_LOCK()` and `MPI_WIN_UNLOCK()`)

```
program ex_fence
  use mpi
  implicit none

  integer, parameter :: assert=0
  integer :: code, rank, realsize, win, i, nbelts, target, m=4, n=4
  integer (kind=MPI_ADDRESS_KIND) :: displacement, dim_win
  real(kind=kind(1.d0)), dimension(:), allocatable :: win_local, tab

  call MPI_INIT(code)
  call MPI_COMM_RANK(MPI_COMM_WORLD, rank, code)
  call MPI_TYPE_SIZE(MPI_DOUBLE_PRECISION,realsize,code)

  if (rank==0) then
     n=0
     allocate(tab(m))
  endif

  allocate(win_local(n))
  dim_win = realsize*n

  call MPI_WIN_CREATE(win_local, dim_win, realsize, MPI_INFO_NULL, &
                      MPI_COMM_WORLD, win, code)
```

```
if (rank==0) then
   tab(:) = (/ (i, i=1,m) /)
else
   win_local(:) = 0.0
end if

call MPI_WIN_FENCE(assert,win,code)
if (rank==0) then
   target = 1; nbelts = 2; displacement = 1
   call MPI_PUT(tab, nbelts, MPI_DOUBLE_PRECISION, target, displacement, &
                nbelts, MPI_DOUBLE_PRECISION, win, code)
end if

call MPI_WIN_FENCE(assert,win,code)
if (rank==0) then
   tab(m) = sum(tab(1:m-1))
else
   win_local(n) = sum(win_local(1:n-1))
endif

call MPI_WIN_FENCE(assert,win,code)
if (rank==0) then
   nbelts = 1; displacement = m-1
   call MPI_GET(tab, nbelts, MPI_DOUBLE_PRECISION, target, displacement, &
                nbelts, MPI_DOUBLE_PRECISION, win, code)
end if
```

5 – Communication Modes
5.5 – One-Sided Communications

Advantages

- Certain algorithms can be written more easily.
- More efficient than point-to-point communications on certain machines (use of specialized hardware such as a DMA engine, coprocessor, specialized memory, ...).
- The implementation can group together several operations.

Disadvantages

- Synchronization management is tricky.
- Complexity and high risk of error.
- For passive target synchronizations, it is mandatory to allocate the memory with `MPI_ALLOC_MEM()` which does not respect the Fortran standard (Cray pointers cannot be used with certain compilers).
- Less efficient than point-to-point communications on certain machines.

6 – Derived datatypes
6.1 – Introduction

Introduction

- In communications, exchanged data have different datatypes: `MPI_INTEGER`, `MPI_REAL`, `MPI_COMPLEX`, etc.
- We can create more complex data structures by using subroutines such as `MPI_TYPE_CONTIGUOUS()`, `MPI_TYPE_VECTOR()`, `MPI_TYPE_INDEXED()` or `MPI_TYPE_CREATE_STRUCT()`
- Derived datatypes allow exchanging non-contiguous or non-homogenous data in the memory and limiting the number of calls to communications subroutines.

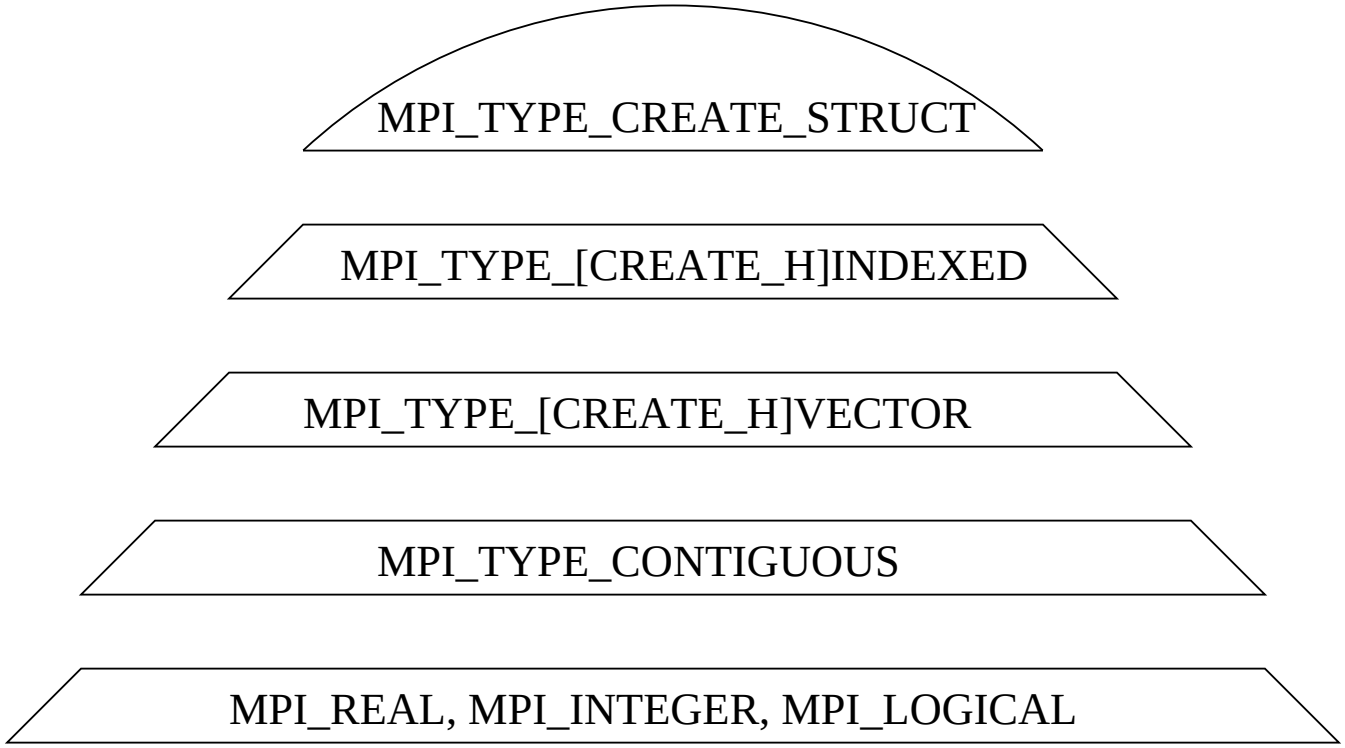

Figure 21 : Hierarchy of the MPI constructors

6 – Derived datatypes
6.2 – Contiguous datatypes

Contiguous datatypes

- MPI_TYPE_CONTIGUOUS() creates a data structure from a homogenous set of existing datatypes contiguous in memory.

1.	6.	11.	16.	21.	26.
2.	7.	12.	17.	22.	27.
3.	8.	13.	18.	23.	28.
4.	9.	14.	19.	24.	29.
5.	10.	15.	20.	25.	30.

```
call MPI_TYPE_CONTIGUOUS(5,MPI_REAL,new_type,code)
```

Figure 22 : MPI_TYPE_CONTIGUOUS subroutine

```
MPI_TYPE_CONTIGUOUS(count,old_type,new_type,code)

integer, intent(in)  :: count, old_type
integer, intent(out) :: new_type,code
```

6 – Derived datatypes
6.3 – Constant stride

Constant stride

- MPI_TYPE_VECTOR() creates a data structure from a homogenous set of existing datatypes separated by a constant stride in memory. The stride is given in number of **elements**.

1.	6.	11.	16.	21.	26.
2.	7.	12.	17.	22.	27.
3.	8.	13.	18.	23.	28.
4.	9.	14.	19.	24.	29.
5.	10.	15.	20.	25.	30.

```
call MPI_TYPE_VECTOR(6,1,5,MPI_REAL,new_type,code)
```

Figure 23 : MPI_TYPE_VECTOR subroutine

```
MPI_TYPE_VECTOR(count,block_length,stride,old_type,new_type,code)

integer, intent(in)  :: count,block_length
integer, intent(in)  :: stride ! given in elements
integer, intent(in)  :: old_type
integer, intent(out) :: new_type,code
```

Constant stride

- MPI_TYPE_CREATE_HVECTOR() creates a data structure from a homogenous set of existing datatype separated by a constant stride in memory.
  The stride is given in **bytes**.
- This call is useful when the old type is no longer a base datatype (MPI_INTEGER, MPI_REAL,...) but a more complex datatype constructed by using MPI subroutines, because in this case the stride can no longer be given in number of elements.

```
MPI_TYPE_CREATE_HVECTOR(count,block_length,stride,old_type,new_type,code)

integer, intent(in)                          :: count,block_length
integer(kind=MPI_ADDRESS_KIND), intent(in) :: stride ! given in bytes
integer, intent(in)                          :: old_type
integer, intent(out)                         :: new_type, code
```

6 – Derived datatypes
6.4 – Commit derived datatypes

Commit derived datatypes

- Before using a new derived datatype, it is necessary to validate it with the MPI_TYPE_COMMIT() subroutine.

```
MPI_TYPE_COMMIT(new_type,code)

integer, intent(inout) :: new_type
integer, intent(out)   :: code
```

- The freeing of a derived datatype is made by using the MPI_TYPE_FREE() subroutine.

```
MPI_TYPE_FREE(new_type,code)

integer, intent(inout) :: new_type
integer, intent(out)   :: code
```

6 – Derived datatypes

6.5 – Examples

6.5.1 – The datatype "matrix row"

```
program column
  use mpi
  implicit none

  integer, parameter                        :: nb_lines=5,nb_columns=6
  integer, parameter                        :: tag=100
  real, dimension(nb_lines,nb_columns)      :: a
  integer, dimension(MPI_STATUS_SIZE)       :: status
  integer                                   :: rank,code,type_column

  call MPI_INIT(code)
  call MPI_COMM_RANK(MPI_COMM_WORLD,rank,code)

  ! Initialization of the matrix on each process
  a(:,:) = real(rank)

  ! Definition of the type_column datatype
  call MPI_TYPE_CONTIGUOUS(nb_lines,MPI_REAL,type_column,code)

  ! Validation of the type_column datatype
  call MPI_TYPE_COMMIT(type_column,code)
```

```
22    ! Sending of the first column
23    if ( rank == 0 ) then
24      call MPI_SEND(a(1,1),1,type_column,1,tag,MPI_COMM_WORLD,code)
25
26    ! Reception in the last column
27    elseif ( rank == 1 ) then
28      call MPI_RECV(a(1,nb_columns),nb_lines,MPI_REAL,0,tag,&
29                    MPI_COMM_WORLD,status,code)
30    end if
31
32    ! Free the datatype
33    call MPI_TYPE_FREE(type_column,code)
34
35    call MPI_FINALIZE(code)
36
37  end program column
```

6 – Derived datatypes

6.5 – Examples

6.5.2 – The datatype "matrix line"

```
program line
  use mpi
  implicit none

  integer, parameter                      :: nb_lines=5,nb_columns=6
  integer, parameter                      :: tag=100
  real, dimension(nb_lines,nb_columns)    :: a
  integer, dimension(MPI_STATUS_SIZE)     :: status
  integer                                 :: rank,code,type_line

  call MPI_INIT(code)
  call MPI_COMM_RANK(MPI_COMM_WORLD,rank,code)

  ! Initialization of the matrix on each process
  a(:,:) = real(rank)

  ! Definition of the datatype type_line
  call MPI_TYPE_VECTOR(nb_columns,1,nb_lines,MPI_REAL,type_line,code)

  ! Validation of the datatype type_ligne
  call MPI_TYPE_COMMIT(type_line,code)
```

```
22    ! Sending of the second line
23    if ( rank == 0 ) then
24      call MPI_SEND(a(2,1),nb_columns,MPI_REAL,1,tag,MPI_COMM_WORLD,code)
25
26    ! Reception in the next to last line
27    elseif ( rank == 1 ) then
28      call MPI_RECV(a(nb_lines-1,1),1,type_line,0,tag,&
29                    MPI_COMM_WORLD,status,code)
30    end if
31
32    ! Free the datatype type_ligne
33    call MPI_TYPE_FREE(type_line,code)
34
35    call MPI_FINALIZE(code)
36
37  end program line
```

6 – Derived datatypes

6.5 – Examples

6.5.3 – The datatype "matrix block"

```
program block
  use mpi
  implicit none

  integer, parameter                        :: nb_lines=5,nb_columns=6
  integer, parameter                        :: tag=100
  integer, parameter                        :: nb_lines_block=2,nb_columns_block=3
  real, dimension(nb_lines,nb_columns)      :: a
  integer, dimension(MPI_STATUS_SIZE)       :: status
  integer                                   :: rank,code,type_block

  call MPI_INIT(code)
  call MPI_COMM_RANK(MPI_COMM_WORLD,rank,code)

  ! Initialization of the matrix on each process
  a(:,:) = real(rank)

  ! Creation of the datatype type_bloc
  call MPI_TYPE_VECTOR(nb_columns_block,nb_lines_block,nb_lines,&
                       MPI_REAL,type_block,code)

  ! Validation of the datatype type_block
  call MPI_TYPE_COMMIT(type_block,code)
```

```
24    ! Sending of a block
25    if ( rank == 0 ) then
26      call MPI_SEND(a(1,1),1,type_block,1,tag,MPI_COMM_WORLD,code)
27
28    ! Reception of the block
29    elseif ( rank == 1 ) then
30      call MPI_RECV(a(nb_lines-1,nb_columns-2),1,type_block,0,tag,&
31                    MPI_COMM_WORLD,status,code)
32    end if
33
34    ! Freeing of the datatype type_block
35    call MPI_TYPE_FREE(type_block,code)
36
37    call MPI_FINALIZE(code)
38
39  end program block
```

6 – Derived datatypes
6.6 – Homogenous datatypes of variable strides

Homogenous datatypes of variable strides

- `MPI_TYPE_INDEXED()` allows creating a data structure composed of a sequence of blocks containing a variable number of elements separated by a variable stride in memory. The stride is given in number of **elements**.
- `MPI_TYPE_CREATE_HINDEXED()` has the same functionality as `MPI_TYPE_INDEXED()` except that the strides separating two data blocks are given in **bytes**.
  This subroutine is useful when the old datatype is not an MPI base datatype(`MPI_INTEGER`, `MPI_REAL`, ...). We cannot therefore give the stride in number of elements of the old datatype.
- For `MPI_TYPE_CREATE_HINDEXED()`, as for `MPI_TYPE_CREATE_HVECTOR()`, use `MPI_TYPE_SIZE()` or `MPI_TYPE_GET_EXTENT()` in order to obtain in a portable way the size of the stride in bytes.

nb=3, blocks_lengths=(2,1,3), displacements=(0,3,7)

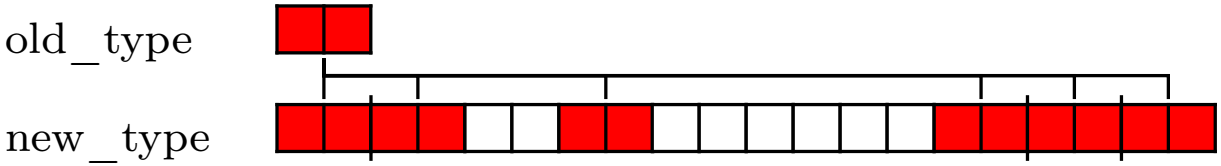

Figure 24 : The MPI_TYPE_INDEXED constructor

```
MPI_TYPE_INDEXED(nb,block_lengths,displacements,old_type,new_type,code)

integer,intent(in)                :: nb
integer,intent(in),dimension(nb) ::  block_lengths
! Attention the displacements are given in elements
integer,intent(in),dimension(nb) :: displacements
integer,intent(in)                :: old_type
integer,intent(out)               :: new_type,code
```

nb=4, blocks_lengths=(2,1,2,1), displacements=(2,10,14,24)

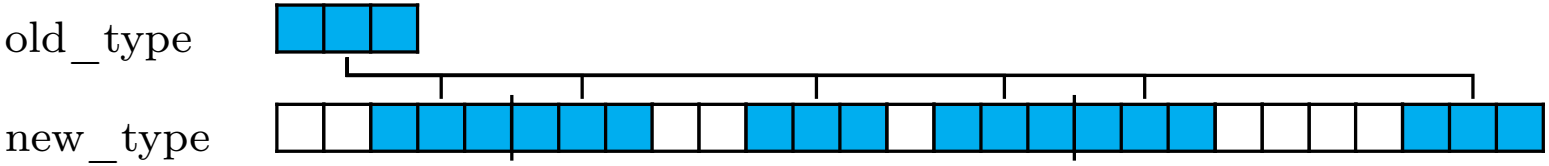

Figure 25 : The MPI_TYPE_CREATE_HINDEXED constructor

```
MPI_TYPE_CREATE_HINDEXED(nb, block_lengths,displacements,
                         old_type,new_type,code)

integer,intent(in)                                          :: nb
integer,intent(in),dimension(nb)                            ::  block_lengths
! Attention the displacements are given in bytes
integer(kind=MPI_ADDRESS_KIND),intent(in),dimension(nb) :: displacements
integer,intent(in)                                          :: old_type
integer,intent(out)                                         :: new_type,code
```

Example : triangular matrix

In the following example, each of the two processes :

1. Initializes its matrix (positive growing numbers on process 0 and negative decreasing numbers on process 1).
2. Constructs its datatype : triangular matrix (superior for the process 0 and inferior for the process 1).
3. Sends its triangular matrix to the other process and receives back a triangular matrix which it stores in the same place which was occupied by the sent matrix. This is done with the `MPI_SENDRECV_REPLACE()` subroutine.
4. Frees its resources and exits MPI.

Before

Process 0

1	9	17	25	33	41	49	57
2	10	18	26	34	42	50	58
3	11	19	27	35	43	51	59
4	12	20	28	36	44	52	60
5	13	21	29	37	45	53	61
6	14	22	30	38	46	54	62
7	15	23	31	39	47	55	63
8	16	24	32	40	48	56	64

Process 1

-1	-9	-17	-25	-33	-41	-49	-57
-2	-10	-18	-26	-34	-42	-50	-58
-3	-11	-19	-27	-35	-43	-51	-59
-4	-12	-20	-28	-36	-44	-52	-60
-5	-13	-21	-29	-37	-45	-53	-61
-6	-14	-22	-30	-38	-46	-54	-62
-7	-15	-23	-31	-39	-47	-55	-63
-8	-16	-24	-32	-40	-48	-56	-64

After

1	-2	-3	-5	-8	-14	-22	-32
2	10	-4	-6	-11	-15	-23	-38
3	11	19	-7	-12	-16	-24	-39
4	12	20	28	-13	-20	-29	-40
5	13	21	29	37	-21	-30	-47
6	14	22	30	38	46	-31	-48
7	15	23	31	39	47	55	-56
8	16	24	32	40	48	56	64

-1	-9	-17	-25	-33	-41	-49	-57
9	-10	-18	-26	-34	-42	-50	-58
17	34	-19	-27	-35	-43	-51	-59
18	35	44	-28	-36	-44	-52	-60
25	36	45	52	-37	-45	-53	-61
26	41	49	53	58	-46	-54	-62
27	42	50	54	59	61	-55	-63
33	43	51	57	60	62	63	-64

Figure 26 : Exchange between the two processes

```
program triangle
  use mpi
  implicit none
  integer,parameter                    :: n=8,tag=100
  real,dimension(n,n)                  :: a
  integer,dimension(MPI_STATUS_SIZE) :: status
  integer                              :: i,code
  integer                              :: rank,type_triangle
  integer,dimension(n)                 ::  block_lengths,displacements

  call MPI_INIT(code)
  call MPI_COMM_RANK(MPI_COMM_WORLD,rank,code)

  ! Initialization of the matrix on each process
  a(:,:) = reshape( (/ (sign(i,-rank),i=1,n*n) /), (/n,n/))

  ! Creation of the triangular matrix datatype sup for process 0
  ! and of the inferior triangular matrix datatype for process 1
  if (rank == 0) then
      block_lengths(:)   = (/ (i-1,i=1,n) /)
     displacements(:)    = (/ (n*(i-1),i=1,n) /)
  else
      block_lengths(:)   = (/ (n-i,i=1,n) /)
     displacements(:)    = (/ (n*(i-1)+i,i=1,n) /)
  endif

  call MPI_TYPE_INDEXED(n, block_lengths,displacements,MPI_REAL,type_triangle,code)
  call MPI_TYPE_COMMIT(type_triangle,code)

  ! Permutation of the inferior and superior triangular matrices
  call MPI_SENDRECV_REPLACE(a,1,type_triangle,mod(rank+1,2),tag,mod(rank+1,2), &
                            tag,MPI_COMM_WORLD,status,code)

  ! Freeing of the triangle datatype
  call MPI_TYPE_FREE(type_triangle,code)
  call MPI_FINALIZE(code)
end program triangle
```

6 – Derived datatypes
6.7 – Subarray datatype constructor

Subarray datatype constructor

The `MPI_TYPE_CREATE_SUBARRAY()` subroutine allows creating a subarray from an array.

Reminder of the vocabulary relative to the arrays in Fortran 95

- The rank of an array is its number of dimensions.
- The extent of an array is the number of elements in one dimension.
- The shape of an array is a vector for which each dimension equals the extent.

For example, the `T(10,0:5,-10:10)` array: Its rank is 3; its extent in the first dimension is 10, in the second 6 and in the third 21; so its shape is the (10,6,21) vector.

```
MPI_TYPE_CREATE_SUBARRAY(nb_dims,shape_array,shape_sub_array,coord_start,
                         order,old_type,new_type,code)

integer,intent(in)                      :: nb_dims
integer,dimension(nb_dims),intent(in)   :: shape_array,shape_sub_array,coord_start
integer,intent(in)                      :: order,old_type
integer,intent(out)                     :: new_type,code
```

Explanation of the arguments

- nb_dims : rank of the array
- shape_array : shape of the array from which a subarray will be extracted
- shape_sub_array : shape of the subarray
- coord_start : start coordinates if the indices of the array start at 0. For example, if we want the start coordinates of the subarray to be `array(2,3)`, we must have `coord_start(:)=(/ 1,2 /)`
- order : storage order of elements
  - `MPI_ORDER_FORTRAN` for the ordering used by Fortran arrays (column-major order)
  - `MPI_ORDER_C` for the ordering used by C arrays (row-major order)

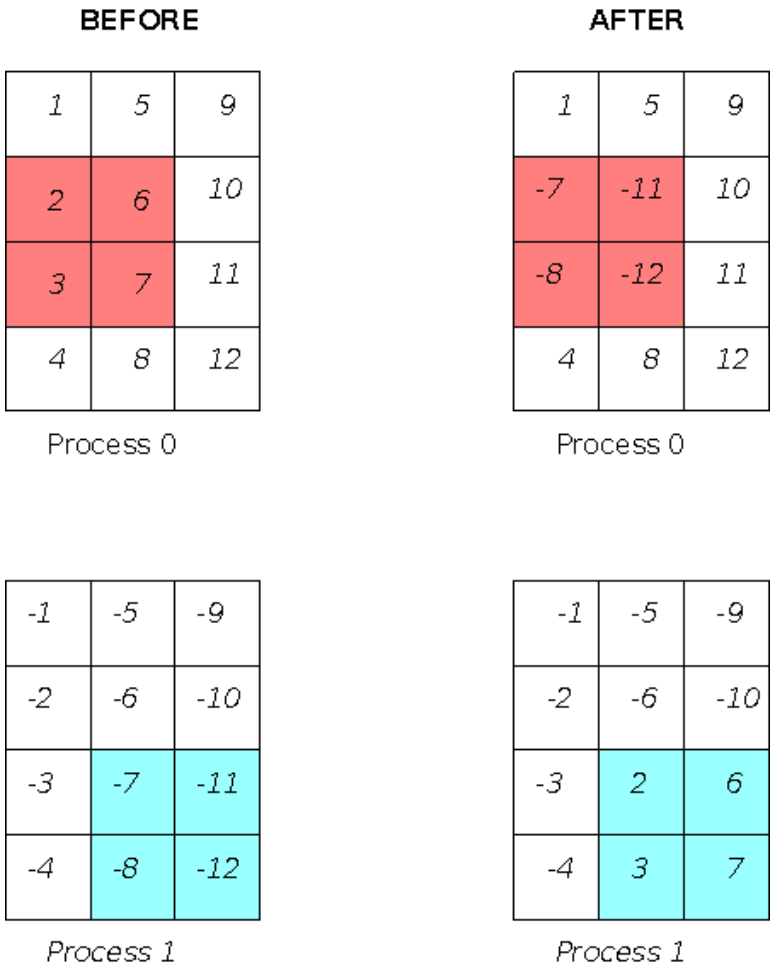

Figure 27 : Exchanges between the two processes

```
program subarray
  use mpi
  implicit none

  integer,parameter                          :: nb_lines=4,nb_columns=3,&
                                                tag=1000,nb_dims=2
  integer                                    :: code,rank,type_subarray,i
  integer,dimension(nb_lines,nb_columns)     :: tab
  integer,dimension(nb_dims)                 :: shape_array,shape_subarray,coord_start
  integer,dimension(MPI_STATUS_SIZE)          :: status

  call MPI_INIT(code)
  call MPI_COMM_RANK(MPI_COMM_WORLD,rank,code)

  !Initialization of the tab array on each process
  tab(:,:) = reshape( (/ (sign(i,-rank),i=1,nb_lines*nb_columns) /) , &
                      (/ nb_lines,nb_columns /) )
```

```
18    !Shape of the tab array from which a subarray will be extracted
19    shape_tab(:) = shape(tab)
20    !The F95 shape function gives the shape of the array put in argument.
21    !ATTENTION, if the concerned array was not allocated on all the processes,
22    !it is necessary to explicitly put the shape of the array in order for it
23    !to be known on all the processes, shape_array(:) = (/ nb_lines,nb_columns /)
24
25    !Shape of the subarray
26    shape_subarray(:) = (/ 2,2 /)
27
28    !Start coordinates of the subarray
29    !For the process 0 we start from the tab(2,1) element
30    !For the process 1 we start from the tab(3,2) element
31    coord_start(:) = (/ rank+1,rank /)
32
33    !Creation of the type_subarray derived datatype
34    call MPI_TYPE_CREATE_SUBARRAY(nb_dims,shape_array,shape_subarray,coord_start,&
35                                  MPI_ORDER_FORTRAN,MPI_INTEGER,type_subarray,code)
36    call MPI_TYPE_COMMIT(type_subarray,code)
37
38    !Exchange of the subarrays
39    call MPI_SENDRECV_REPLACE(tab,1,type_subarray,mod(rank+1,2),tag,&
40                              mod(rank+1,2),tag,MPI_COMM_WORLD,status,code)
41    call MPI_TYPE_FREE(type_subarray,code)
42    call MPI_FINALIZE(code)
43  end program subarray
```

6 – Derived datatypes
6.8 – Heterogenous datatypes

- MPI_TYPE_CREATE_STRUCT() call allows creating a set of data blocks indicating the **type**, the **count** and the **displacement** of each block.
- It is the most general datatype constructor. It further generalizes MPI_TYPE_INDEXED() by allowing a different datatype for each block.

nb=5, blocks_lengths=(3,1,5,1,1), displacements=(0,7,11,21,26),
old_types=(type1,type2,type3,type1,type3)

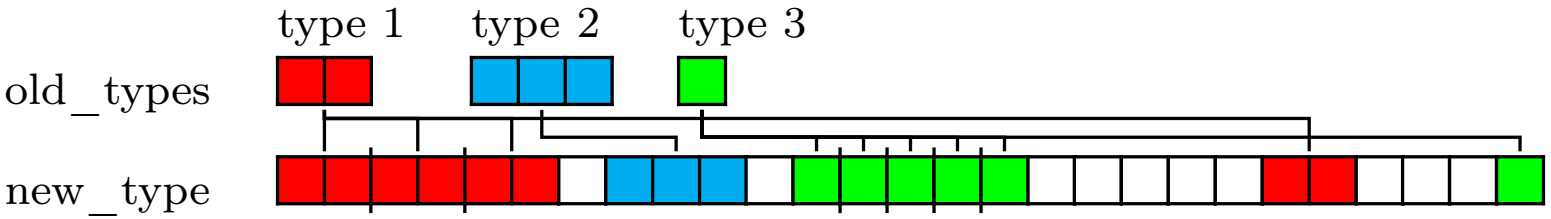

Figure 28 : The MPI_TYPE_CREATE_STRUCT constructor

```
MPI_TYPE_CREATE_STRUCT(nb,blocks_lengths,displacements,
                       old_types,new_type,code)

integer,intent(in)                                          :: nb
integer,intent(in),dimension(nb)                            :: blocks_lengths
integer(kind=MPI_ADDRESS_KIND),intent(in),dimension(nb)  :: displacements
integer,intent(in),dimension(nb)                            :: old_types
integer, intent(out)                                        :: new_type,code
```

Compute the displacement between two values

- MPI_TYPE_CREATE_STRUCT() is useful for creating MPI datatypes corresponding to Fortran derived datatypes or to C structures.
- The memory alignment of heterogeneous data structures is different for each architecture and each compiler.
- The displacement between two components of a Fortan derived datatype (or of a C structure) can be obtained by calculating the difference between their memory addresses.
- MPI_GET_ADDRESS() provides the address of a variable. It's equivalent of & operator in C.
- Warning, even in C, it is better to use this subroutine for portability reasons.

```
MPI_GET_ADDRESS(variable,address_variable,code)

<type>,intent(in)                          :: variable
integer(kind=MPI_ADDRESS_KIND),intent(out) :: address_variable
integer,intent(out)                        :: code
```

```
program Interaction_Particles
  use mpi
  implicit none

  integer, parameter                              :: n=1000,tag=100
  integer, dimension(MPI_STATUS_SIZE)             :: status
  integer                                         :: rank,code,type_particle,i
  integer, dimension(4)                           :: types,blocks_lengths
  integer(kind=MPI_ADDRESS_KIND), dimension(4) :: displacements,addresses

  type Particule
     character(len=5)                             :: category
     integer                                      :: mass
     real, dimension(3)                           :: coords
     logical                                      :: class
  end type Particule
  type(Particule), dimension(n)                   :: p,temp_p

  call MPI_INIT(code)
  call MPI_COMM_RANK(MPI_COMM_WORLD,rank,code)

  ! Construction of the datatype
  types = (/MPI_CHARACTER,MPI_INTEGER,MPI_REAL,MPI_LOGICAL/)
  blocks_lengths= (/5,1,3,1/)
```

```
25    call MPI_GET_ADDRESS(p(1)%category,addresses(1),code)
26    call MPI_GET_ADDRESS(p(1)%mass,addresses(2),code)
27    call MPI_GET_ADDRESS(p(1)%coords,addresses(3),code)
28    call MPI_GET_ADDRESS(p(1)%class,addresses(4),code)
29
30    ! Calculation of displacements relative to the start address
31    do i=1,4
32       displacements(i)=addresses(i) - addresses(1)
33    end do
34    call MPI_TYPE_CREATE_STRUCT(4,blocks_lengths,displacements,types,type_particle, &
35                                code)
36    ! Validation of the structured datatype
37    call MPI_TYPE_COMMIT(type_particle,code)
38    ! Initialization of particles for each process
39    ....
40    ! Sending of particles from 0 towards 1
41    if (rank == 0) then
42       call MPI_SEND(p(1)%category,n,type_particle,1,tag,MPI_COMM_WORLD,code)
43    else
44       call MPI_RECV(temp_p(1)%category,n,type_particle,0,tag,MPI_COMM_WORLD, &
45                     status,code)
46    endif
47
48    ! Freeing of the datatype
49    call MPI_TYPE_FREE(type_particle,code)
50    call MPI_FINALIZE(code)
51 end program Interaction_Particles
```

6 – Derived datatypes
6.9 – Size of MPI datatype

- MPI_TYPE_SIZE() returns the number of bytes needed to send a datatype. This value ignores any holes present in the datatype.

```
MPI_TYPE_SIZE(datatype,size,code)

integer, intent(in)  :: type_data
integer, intent(out) :: size, code
```

- The extent of a datatype is the memory space occupied by this datatype (in bytes). This value is used to calculate the position of the next datatype element (i.e. the stride between two successive datatype elements).

```
MPI_TYPE_GET_EXTENT(datatype,lb,extent,code)

integer, intent(in)                        :: datatype
integer(kind=MPI_ADDRESS_KIND),intent(out):: lb,extent
integer, intent(out)                       :: code
```

Example 1 : `MPI_TYPE_INDEXED(2,(/2,1/),(/1,4/),MPI_INTEGER,type,code)`

MPI datatype :

Two succesives elements :

1	2	3	4	5	6	7	8	9	10

`size = 12 (3 integers); lower bound = 4 (1 integer); extent = 16 (4 integers)`

Example 2 : `MPI_TYPE_VECTOR(3,1,nb_lines,MPI_INTEGER,type_half_line,code)`

2D View :

1	6	11	16	21	26
2	7	12	17	22	27
3	8	13	18	23	28
4	9	14	19	24	29
5	10	15	20	25	30

1D View :

1	2	3	4	5	6	7	8	9	10	11

`size = 12 (3 integers); lower bound = 0; extent = 44 (11 integers)`

- The extent is a datatype parameter. By default, it's the space in memory between the first and last component of a datatype (bounds included and with alignment considerations). We can modify the extent to create a new datatype by adapting the preceding one using MPI_TYPE_CREATE_RESIZED(). This provides a way to choose the stride between two successive datatype elements.

```
MPI_TYPE_CREATE_RESIZED(old,lb,extent,new,code)

integer, intent(in)                          :: old
integer(kind=MPI_ADDRESS_KIND),intent(in) :: lb,extent
integer, intent(out)                         :: new,code
```

```
PROGRAM half_line
  USE mpi
  IMPLICIT NONE
  INTEGER,PARAMETER                          :: nb_lines=5,nb_columns=6,&
                                                half_line=nb_columns/2,tag=1000
  INTEGER,DIMENSION(nb_lines,nb_columns)     :: A
  INTEGER                                    :: typeHalfLine,typeHalfLine2
  INTEGER                                    :: code,size_integer,rank,i
  INTEGER(kind=MPI_ADDRESS_KIND)              :: lb=0, extent,sizeDisplacement
  INTEGER, DIMENSION(MPI_STATUS_SIZE)         :: status

  CALL MPI_INIT(code)
  CALL MPI_COMM_RANK(MPI_COMM_WORLD,rank,code)
  !Initialization of the A matrix on each process
  A(:,:) = RESHAPE( (/ (SIGN(i,-rank),i=1,nb_lines*nb_columns) /), &
                    (/ nb_lines,nb_columns /) )

  !Construction of the derived datatype typeHalfLine
  CALL MPI_TYPE_VECTOR(half_line,1,nb_lines,MPI_INTEGER,typeHalfLine,code)

  !Know the size of the datatype MPI_INTEGER
  CALL MPI_TYPE_SIZE(MPI_INTEGER, size_integer, code)

  ! Information on type typeHalfLine
  call MPI_TYPE_GET_EXTENT(typeHalfLine,lb,extent,code)
  if (rank == 0) print *, "typeHalfLine: lb=",lb,", extent=",extent

  !Construction of the derived datatype typeHalfLine2
  sizeDisplacement = size_integer
  CALL MPI_TYPE_CREATE_RESIZED(typeHalfLine,lb,sizeDisplacement,&
                               typeHalfLine2,code)
```

```
32    ! Information on type typeHalfLine2
33    call MPI_TYPE_GET_EXTENT(typeHalfLine2,lb,extent,code)
34    if (rank == 0) print *, "typeHalfLine2: lb=",lb,", extent=",extent
35
36    !Validation of the datatype typeHalfLine2
37    CALL MPI_TYPE_COMMIT(typeHalfLine2,code)
38
39    IF (rank == 0) THEN
40       !Sending of the A matrix to the process 1 with the derived datatype typeHalfLine2
41       CALL MPI_SEND(A(1,1), 2, typeHalfLine2, 1, tag, &
42                     MPI_COMM_WORLD, code)
43    ELSE
44       !Reception for the process 1 in the A matrix
45       CALL MPI_RECV(A(1,nb_columns-1), 6, MPI_INTEGER, 0, tag,&
46                     MPI_COMM_WORLD,status, code)
47       PRINT *,'A matrix on the process 1'
48       DO i=1,nb_lines
49          PRINT *,A(i,:)
50       END DO
51    END IF
52
53    CALL MPI_FINALIZE(code)
54 END PROGRAM half_line
```

```
> mpiexec -n 2 half_ligne
 typeHalfLine: lb=0, extent=44
 typeHalfLine2: lb=0, extent=4
```

```
A matrix on the process 1
 -1  -6 -11 -16  1  12
 -2  -7 -12 -17  6 -27
 -3  -8 -13 -18 11 -28
 -4  -9 -14 -19  2 -29
 -5 -10 -15 -20  7 -30
```

6 – Derived datatypes
6.10 – Conclusion

Conclusion

- The MPI derived datatypes are powerful data description portable mechanisms.
- When they are combined with subroutines like `MPI_SENDRECV()`, they allow simplifying the writing of interprocess exchanges.
- The combination of derived datatypes and topologies (described in one of the next chapters) makes MPI the ideal tool for all domain decomposition problems with both regular or irregular meshes.

7 – Communicators
7.1 – Introduction

Introduction

The purpose of communicators is to create subgroups on which we can carry out operations such as collective or point-to-point communications. Each subgroup will have its own communication space.

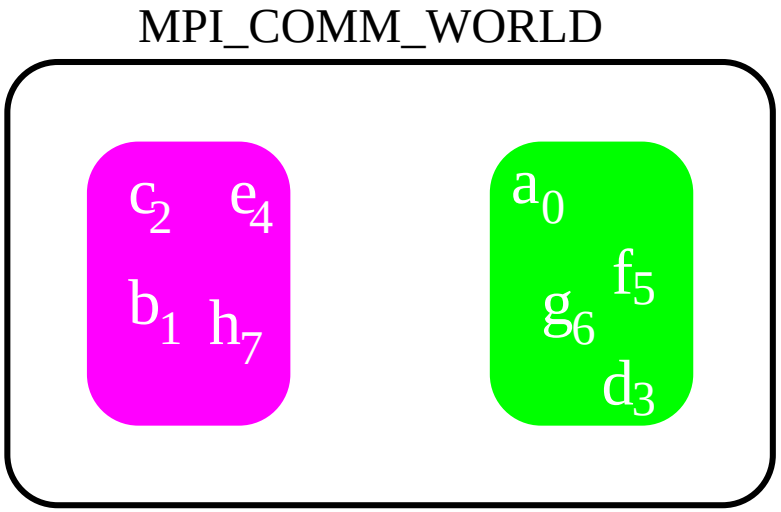

Figure 29 : Communicator partitioning

7 – Communicators
7.2 – Example

Example

For example, we want to broadcast a collective message to even-ranked processes and another message to odd-ranked processes.

- Looping on *send/recv* can be very detrimental especially if the number of processes is high. Also a test inside the loop would be compulsory in order to know if the sending process must send the message to an even or odd process rank.
- A solution is to create a communicator containing the even-ranked processes, another containing the odd-ranked processes, and initiate the collective communications inside these groups.

7 – Communicators
7.3 – Default communicator

Default communicator

- A communicator can only be created from another communicator. The first one will be created from the `MPI_COMM_WORLD`.
- After the `MPI_INIT()` call, a communicator is created for the duration of the program execution.
- Its identifier `MPI_COMM_WORLD` is an integer value defined in the header files.
- This communicator can only be destroyed via a call to `MPI_FINALIZE()`.
- By default, therefore, it sets the scope of collective and point-to-point communications to include all the processes of the application.

7 – Communicators
7.4 – Groups and communicators

Groups and communicators

- A communicator consists of:
  - A group, which is an ordered group of processes.
  - A communication context put in place by calling one of the communicator construction subroutines, which allows determination of the communication space.
- The communication contexts are managed by MPI (the programmer has no action on them: It is a hidden attribute).
- In the MPI library, the following subroutines exist for the purpose of building communicators: `MPI_COMM_CREATE()`, `MPI_COMM_DUP()`, `MPI_COMM_SPLIT()`
- The communicator constructors are collective calls.
- Communicators created by the programmer can be destroyed by using the `MPI_COMM_FREE()` subroutine.

Partitioning of a communicator

In order to solve the problem example:

- Partition the communicator into odd-ranked and even-ranked processes.
- Broadcast a message inside the odd-ranked processes and another message inside the even-ranked processes.

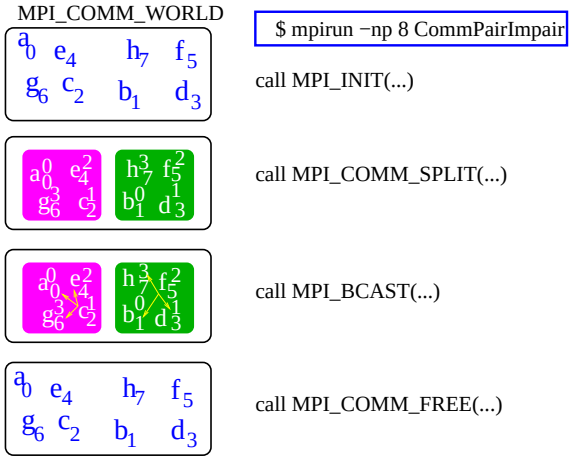

Figure 30 : Communicator creation/destruction

Partitioning of a communicator with MPI_COMM_SPLIT()

The MPI_COMM_SPLIT() subroutine allows:

- Partitioning a given communicator into as many communicators as we want.
- Giving the same name to all these communicators: The process value will be the value of its communicator.
- Method :
  1. Define a colour value for each process, associated with its communicator number.
  2. Define a key value for ordering the processes in each communicator
  3. Create the partition where each communicator is called new_comm

```
MPI_COMM_SPLIT(comm,color,key,new_comm,code)

integer, intent(in)  :: comm, color, key
integer, intent(out) :: new_comm, code
```

A process which assigns a color value equal to MPI_UNDEFINED will have the invalid communicator MPI_COMM_NULL for new_com.

Example

Let's look at how to proceed in order to build the communicator which will subdivide the communication space into odd-ranked and even-ranked processes via the `MPI_COMM_SPLIT()` constructor.

process	a	b	c	d	e	f	g	h
rank_world	0	1	2	3	4	5	6	7
color	0	1	0	1	0	1	0	1
key	0	1	-1	3	4	-1	6	7
rank_even_odd	1	1	0	2	2	0	3	3

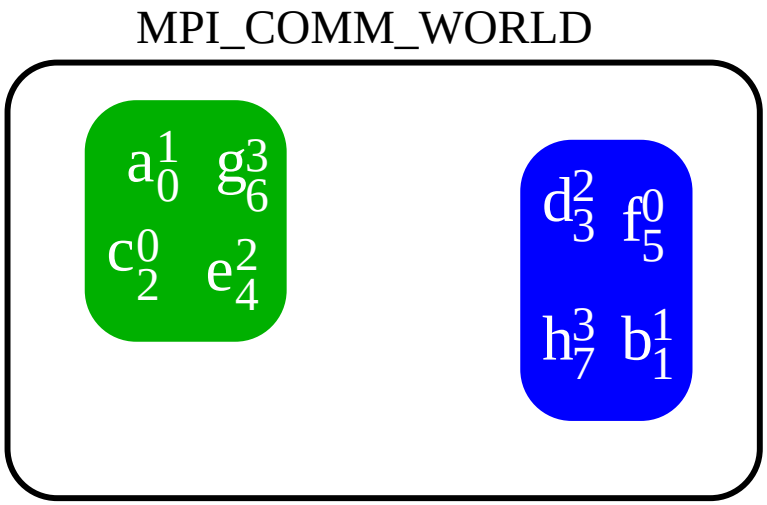

Figure 31 : Construction of the `CommEvenOdd` communicator with `MPI_COMM_SPLIT()`

```
program EvenOdd
  use mpi
  implicit none

  integer, parameter :: m=16
  integer            :: key,CommEvenOdd
  integer            :: rank_in_world,code
  real, dimension(m) :: a

  call MPI_INIT(code)
  call MPI_COMM_RANK(MPI_COMM_WORLD,rank_in_world,code)

  ! Initialization of the A vector
  a(:)=0.
  if(rank_in_world == 2) a(:)=2.
  if(rank_in_world == 5) a(:)=5.

  key = rank_in_world
  if (rank_in_world == 2 .OR. rank_in_world == 5 ) then
    key=-1
  end if

 ! Creation of even and odd communicators by giving them the same name
 call MPI_COMM_SPLIT(MPI_COMM_WORLD,mod(rank_in_world,2),key,CommEvenOdd,code)

 ! Broadcast of the message by the rank process 0 of each communicator to the processes
 ! of its group
  call MPI_BCAST(a,m,MPI_REAL,0,CommEvenOdd,code)

 ! Destruction of the communicators
 call MPI_COMM_FREE(CommEvenOdd,code)
 call MPI_FINALIZE(code)
end program EvenOdd
```

7 – Communicators
7.6 – Communicator built from a group

Communicator built from a group

- We can also build a communicator by defining a group of processes:
  Call to `MPI_COMM_GROUP()`, `MPI_GROUP_INCL()`, `MPI_COMM_CREATE()`, `MPI_GROUP_FREE()`
- For the example case, this method presents many disadvantages because it requires:
  - Naming the two communicators differently (for example `comm_even` and `comm_odd`).
  - Going into the groups to build these two communicators.
  - Leaving MPI to determine the process rank order.
  - Testing the validity of the communicator.

7 – Communicators
7.7 – Topologies

Topologies

- In most applications, especially in domain decomposition methods where we match the calculation domain to the process grid, it is helpful to be able to arrange the processes according to a regular topology.
- MPI allows defining virtual cartesian or graph topologies.
  - Cartesian topologies :
    - Each process is defined in a grid.
    - Each process has a neighbour in the grid.
    - The grid can be periodic or not.
    - The processes are identified by their coordinates in the grid.
  - Graph topologies :
    - Can be used in more complex topologies.

7 – Communicators
7.7 – Topologies
7.7.1 – Cartesian topologies

Cartesian topologies

- A Cartesian topology is defined from a given communicator named comm_old, calling the MPI_CART_CREATE() subroutine.
- We define:
  - An integer ndims representing the number of grid dimensions.
  - An integer array dims of dimension ndims showing the number of processes in each dimension.
  - An array of ndims logicals which shows the periodicity of each dimension.
  - A logical reorder which shows if the process numbering can be changed by MPI.

```
MPI_CART_CREATE(comm_old, ndims,dims,periods,reorder,comm_new,code)

integer, intent(in)                   :: comm_old, ndims
integer, dimension(ndims),intent(in) :: dims
logical, dimension(ndims),intent(in) :: periods
logical, intent(in)                   :: reorganization
integer, intent(out)                  :: comm_new, code
```

Example

Example on a grid having 4 domains along x and 2 along y, periodic in y.

```
use mpi
integer                    :: comm_2D, code
integer, parameter         :: ndims = 2
integer, dimension(ndims) :: dims
logical, dimension(ndims) :: periods
logical                    :: reorder

..............................................

dims(1) = 4
dims(2) = 2
periods(1) = .false.
periods(2) = .true.
reorder = .false.

call MPI_CART_CREATE(MPI_COMM_WORLD,ndims,dims,periods,reorder,comm_2D,code)
```

If `reorder = .false.` then the rank of the processes in the new communicator (comm_2D) is the same as in the old communicator (`MPI_COMM_WORLD`).
If `reorder = .true.`, the MPI implementation chooses the order of the processes.

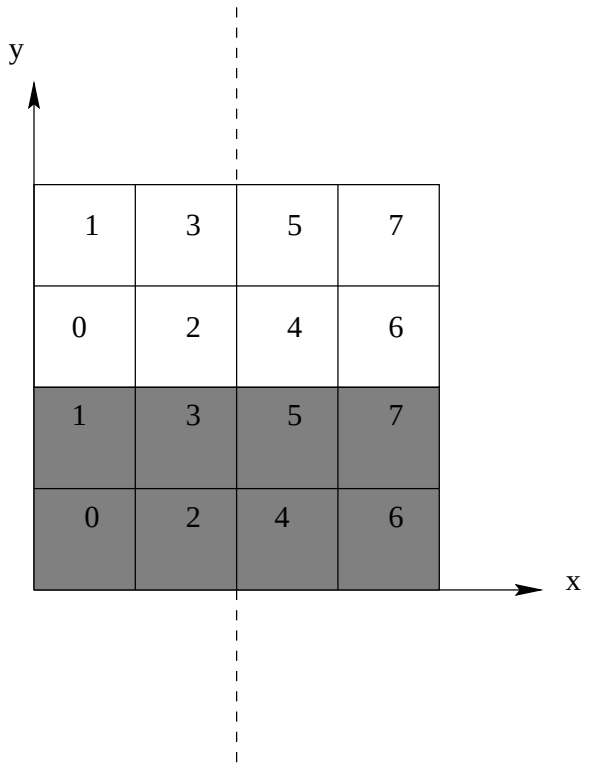

Figure 32 : A 2D periodic Cartesian topology in y

3D Example

Example on a 3D grid having 4 domains along x, 2 along y and 2 along z, non periodic.

```
use mpi
integer                    :: comm_3D,code
integer, parameter         :: ndims = 3
integer, dimension(ndims) :: dims
logical, dimension(ndims) :: periods
logical                    :: reorder

.............................................

dims(1) = 4
dims(2) = 2
dims(3) = 2
periods(:) = .false.
reorder = .false.

call MPI_CART_CREATE(MPI_COMM_WORLD,ndims,dims,periods,reorder,comm_3D,code)
```

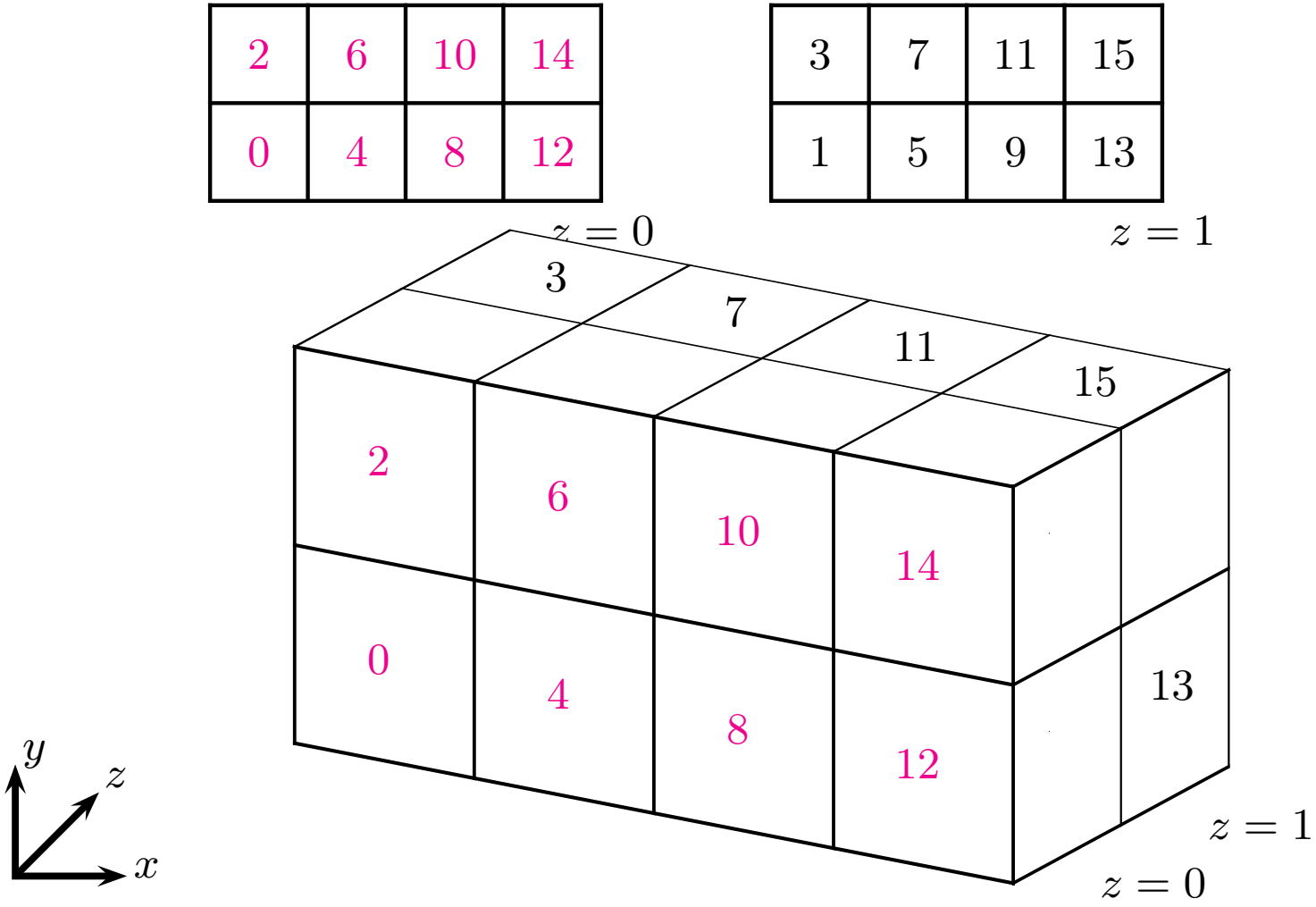

Figure 33 : A 3D non-periodic Cartesian topology

Process distribution

The MPI_DIMS_CREATE() subroutine returns the number of processes in each dimension of the grid according to the total number of processes.

```
MPI_DIMS_CREATE(nb_procs,ndims,dims,code)

integer, intent(in)                      :: nb_procs, ndims
integer, dimension(ndims),intent(inout) :: dims
integer, intent(out)                     :: code
```

Remark : If the values of dims in entry are all 0, then we leave to MPI the choice of the number of processes in each direction according to the total number of processes.

dims in entry	call MPI_DIMS_CREATE	dims en exit
(0,0)	(8,2,dims,code)	(4,2)
(0,0,0)	(16,3,dims,code)	(4,2,2)
(0,4,0)	(16,3,dims,code)	(2,4,2)
(0,3,0)	(16,3,dims,code)	error

Rank od a process

In a Cartesian topology, the MPI_CART_RANK() subroutine returns the rank of the associated process to the coordinates in the grid.

```
MPI_CART_RANK(comm,coords,rank,code)

integer, intent(in)                    :: comm
integer, dimension(ndims),intent(in)   :: coords
integer, intent(out)                   :: rank, code
```

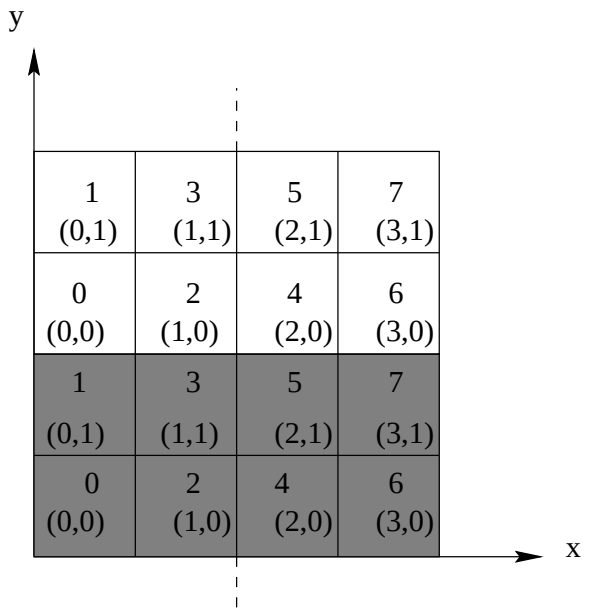

Figure 34 : A 2D periodic Cartesian topology in y

```
coords(1)=dims(1)-1
do i=0,dims(2)-1
  coords(2) = i
  call MPI_CART_RANK(comm_2D,coords,rank(i),code)
end do
.............................................
i=0,in entry coords=(3,0),in exit rank(0)=6.
i=1,in entry coords=(3,1),in exit rank(1)=7.
```

Coordinates of a process

In a cartesian topology, the MPI_CART_COORDS() subroutine returns the coordinates of a process of a given rank in the grid.

```
MPI_CART_COORDS(comm, rank, ndims, coords, code)

integer, intent(in)                    :: comm, rank, ndims
integer, dimension(ndims),intent(out) :: coords
integer, intent(out)                   :: code
```

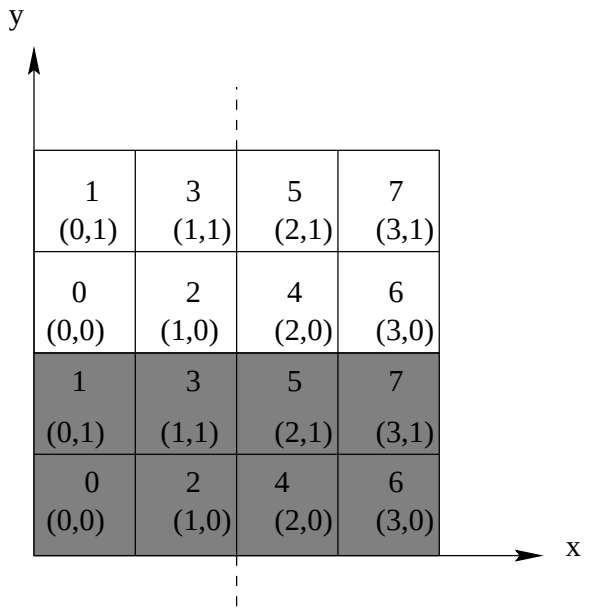

Figure 35 : A 2D periodic Cartesian topology in y

```
if (mod(rank,2) == 0) then
  call MPI_CART_COORDS(comm_2D,rank,2,coords,code)
end if
.............................................
In entry, the rank values are : 0,2,4,6.
In exit, the coords values are :
(0,0),(1,0),(2,0),(3,0)
```

Rank of neighbours

In a Cartesian topology, a process that calls the MPI_CART_SHIFT() subroutine can obtain the rank of a neighboring process in a given direction.

```
MPI_CART_SHIFT(comm, direction, step, rank_previous, rank_next, code)

integer, intent(in)  :: comm, direction, step
integer, intent(out) :: rank_previous,rank_next
integer, intent(out) :: code
```

- The **direction** parameter corresponds to the displacement axis (xyz).
- The **step** parameter corresponds to the displacement step.
- If a rank does not have a neighbor before (or after) in the requested direction, then the value of the previous (or following) rank will be MPI_PROC_NULL.

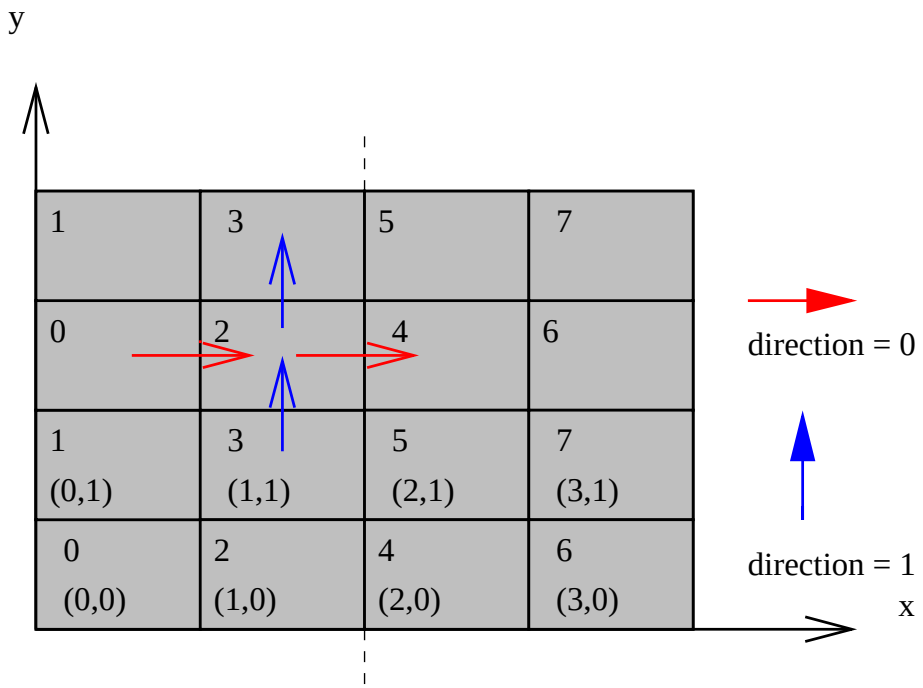

Figure 36 : Call of the MPI_CART_SHIFT() subroutine

```
call MPI_CART_SHIFT(comm_2D,0,1,rank_left,rank_right,code)
.............................................
For the process 2, rank_left=0, rank_right=4
```

```
call MPI_CART_SHIFT(comm_2D,1,1,rank_low,rank_high,code)
.............................................
For the process 2, rank_low=3, rank_high=3
```

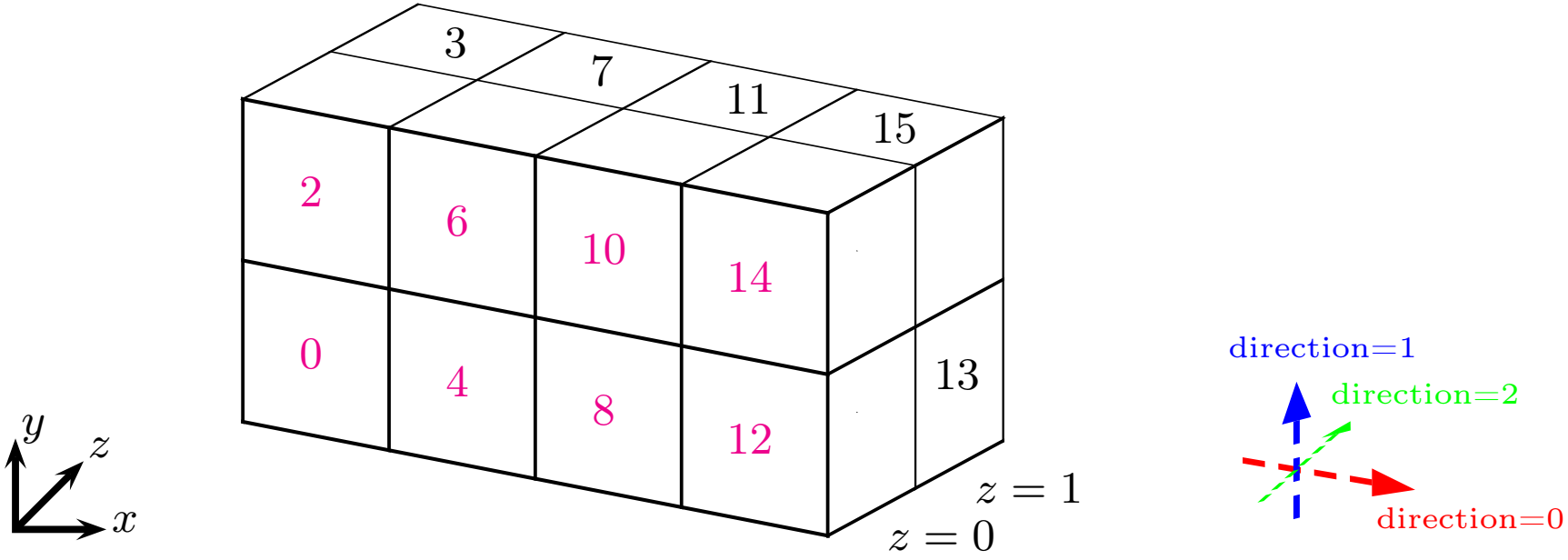

Figure 37 : Call of the MPI_CART_SHIFT() subroutine

```
call MPI_CART_SHIFT(comm_3D,0,1,rank_left,rank_right,code)
.............................................
For the process 0, rank_left=-1, rank_right=4
```

```
call MPI_CART_SHIFT(comm_3D,1,1,rank_low,rank_high,code)
.............................................
For the process 0, rank_low=-1, rank_high=2
```

```
call MPI_CART_SHIFT(comm_3D,2,1,rank_ahead,rank_before,code)
.............................................
For the process 0, rank_ahead=-1, rank_before=1
```

```
1  program decomposition
2    use mpi
3    implicit none
4
5    integer                    :: rank_in_topo,nb_procs
6    integer                    :: code,comm_2D
7    integer, dimension(4)      :: neighbor
8    integer, parameter         :: N=1,E=2,S=3,W=4
9    integer, parameter         :: ndims = 2
10   integer, dimension (ndims) :: dims,coords
11   logical, dimension (ndims) :: periods
12   logical                    :: reorder
13
14   call MPI_INIT(code)
15
16   call MPI_COMM_SIZE(MPI_COMM_WORLD,nb_procs,code)
17
18   ! Know the number of processes along x and y
19   dims(:) = 0
20
21   call MPI_DIMS_CREATE(nb_procs,ndims,dims,code)
```

```
22    ! 2D y-periodic grid creation
23    periods(1) = .false.
24    periods(2) = .true.
25    reorganization = .false.
26
27    call MPI_CART_CREATE(MPI_COMM_WORLD,ndims,dims,periods,reorganization,comm_2D,code)
28
29    ! Know my coordinates in the topology
30    call MPI_COMM_RANK(comm_2D,rank_in_topo,code)
31    call MPI_CART_COORDS(comm_2D,rank_in_topo,ndims,coords,code)
32
33    ! Search of my West and East neigbors
34    call MPI_CART_SHIFT(comm_2D,0,1,neighbor(W),neighbor(E),code)
35
36    ! Search of my South and North neighbors
37    call MPI_CART_SHIFT(comm_2D,1,1,neighbor(S),neighbor(N),code)
38
39    call MPI_FINALIZE(code)
40
41  end program decomposition
```

7 – Communicators
7.7 – Topologies
7.7.2 – Subdividing a Cartesian topology

Subdividing a Cartesian topology

- The goal, by example, is to degenerate a 2D or 3D cartesian topology into, respectively, a 1D or 2D Cartesian topology.
- For MPI, degenerating a 2D Cartesian topology creates as many communicators as there are rows or columns in the initial Cartesian grid. For a 3D Cartesian topology, there will be as many communicators as there are planes.
- The major advantage is to be able to carry out collective operations limited to a subgroup of processes belonging to :
  - the same row (or column), if the initial topology is 2D ;
  - the same plane, if the initial topology is 3D.

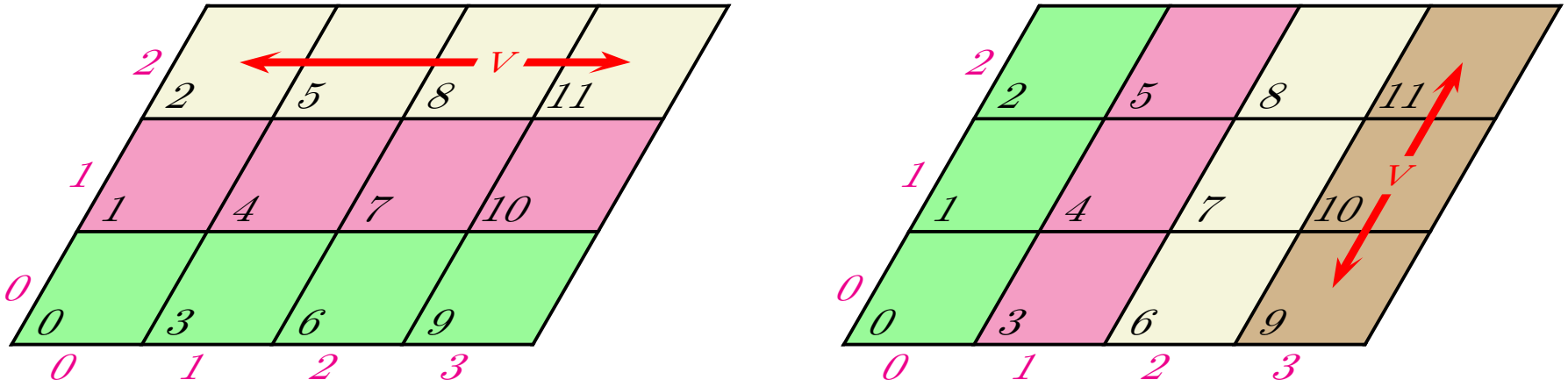

Figure 38 : Two examples of data distribution in a degenerated 2D topology

Subdividing a Cartesian topology

There are two ways to degenerate a topology :

- By using the MPI_COMM_SPLIT() general subroutine
- By using the MPI_CART_SUB() subroutine designed for this purpose

```
MPI_CART_SUB(CommCart,remain_dims,CommCartD,code)

logical,intent(in),dimension(NDim) :: remain_dims
integer,intent(in)                 :: CommCart
integer,intent(out)                :: CommCartD, code
```

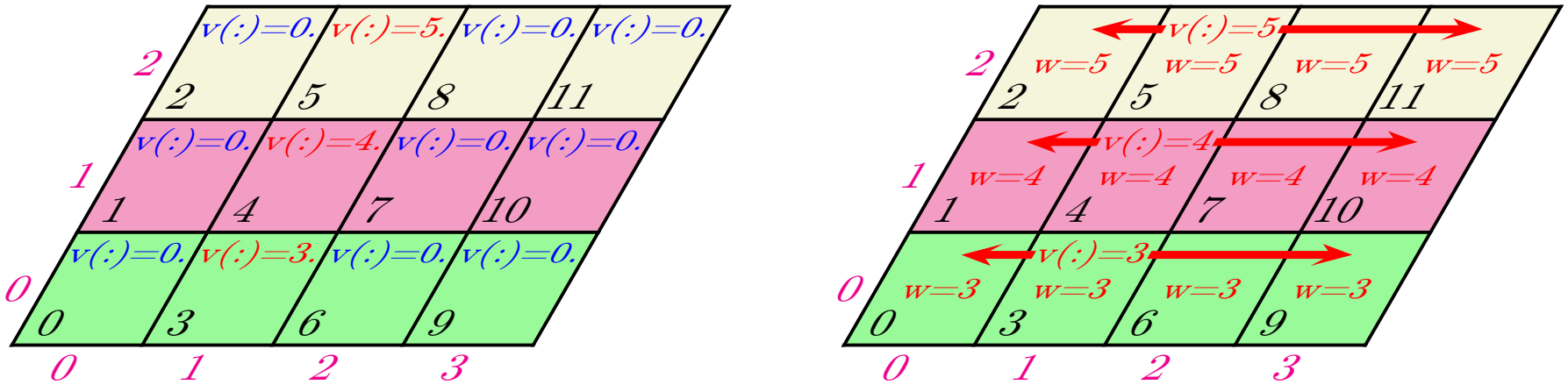

Figure 39 : Broadcasst of a V array in the degenerated 2D grid.

```
program CommCartSub
  use mpi
  implicit none

  integer                    :: Comm2D,Comm1D,rank,code
  integer,parameter          :: NDim2D=2
  integer,dimension(NDim2D)  :: Dim2D,Coord2D
  logical,dimension(NDim2D)  :: Period,remain_dims
  logical                    :: Reorder
  integer,parameter          :: m=4
  real, dimension(m)         :: V=0.
  real                       :: W=0.
```

```
13    call MPI_INIT(code)
14
15    ! Creation of the initial 2D grid
16    Dim2D(1) = 4
17    Dim2D(2) = 3
18    Period(:) = .false.
19    ReOrder = .false.
20    call MPI_CART_CREATE(MPI_COMM_WORLD,NDim2D,Dim2D,Period,ReOrder,Comm2D,code)
21    call MPI_COMM_RANK(Comm2D,rank,code)
22    call MPI_CART_COORDS(Comm2D,rank,NDim2D,Coord2D,code)
23
24    ! Initialization of the V vector
25    if (Coord2D(1) == 1) V(:)=real(rank)
26
27    ! Every row of the grid must be a 1D cartesian topology
28    remain_dims(1) = .true.
29    remain_dims(2) = .false.
30    ! Subdivision of the 2D cartesian grid
31    call MPI_CART_SUB(Comm2D,remain_dims,Comm1D,code)
32
33    ! The processes of column 2 distribute the V vector to the processes of their row
34    call MPI_SCATTER(V,1,MPI_REAL,W,1,MPI_REAL,1,Comm1D,code)
35
36    print '("Rank : ",I2," ; Coordinates : (",I1,",",I1,") ; W = ",F2.0)', &
37          rank,Coord2D(1),Coord2D(2),W
38
39    call MPI_FINALIZE(code)
40  end program CommCartSub
```

```
> mpiexec -n 12 CommCartSub
Rank :  0 ; Coordinates : (0,0) ; W = 3.
Rank :  1 ; Coordinates : (0,1) ; W = 4.
Rank :  3 ; Coordinates : (1,0) ; W = 3.
Rank :  8 ; Coordinates : (2,2) ; W = 5.
Rank :  4 ; Coordinates : (1,1) ; W = 4.
Rank :  5 ; Coordinates : (1,2) ; W = 5.
Rank :  6 ; Coordinates : (2,0) ; W = 3.
Rank : 10 ; Coordinates : (3,1) ; W = 4.
Rank : 11 ; Coordinates : (3,2) ; W = 5.
Rank :  9 ; Coordinates : (3,0) ; W = 3.
Rank :  2 ; Coordinates : (0,2) ; W = 5.
Rank :  7 ; Coordinates : (2,1) ; W = 4.
```

8 – MPI-IO
8.1 – Introduction

Input/Output Optimisation

- Applications which perform large calculations also tend to handle large amounts of data and generate a significant number of I/O requests.
- Effective treatment of I/O can highly improve the global performances of applications.
- I/O tuning of parallel codes involves:
  - Parallelizing I/O access of the program in order to avoid serial bottlenecks and to take advantage of parallel file systems
  - Implementing efficient data access algorithms (non-blocking I/O)
  - Leveraging mechanisms implemented by the operating system (request grouping methods, I/O buffers, etc.).
- Libraries make I/O optimisations of parallel codes easier by providing ready-to-use capabilities.

The MPI-IO interface

- The MPI-2 norm defines a set of functions designed to manage parallel I/O.
- The I/O functions use well-known MPI concepts. For instance, collectives and non-blocking operations on files and between MPI processes are similar. Files can also be accessed in a patterned way using the existing derived datatype functionality.
- Other concepts come from native I/O interfaces (file descriptors, attributes, ...).

Example of a sequential optimisation implemented by I/O libraries

- I/O performance suffers considerably when making many small I/O requests.
- Access on small, non-contiguous regions of data can be optimized by grouping requests and using temporary buffers.
- Such optimisation is performed automatically by MPI-IO libraries.

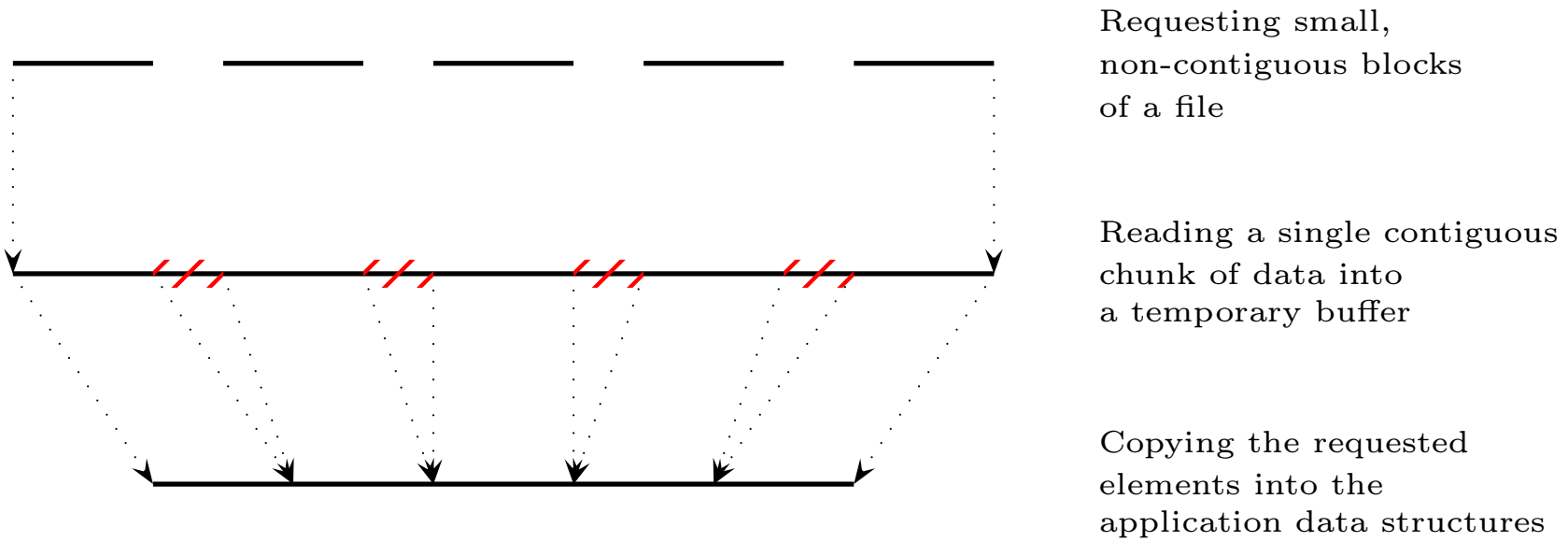

Figure 40 : Data sieving mechanism improving I/O access on small, non-contiguous data set.

Example of a parallel optimisation

Collective I/O access can be optimised by rebalancing the I/O operations in contiguous chunks and performing inter-process communications.

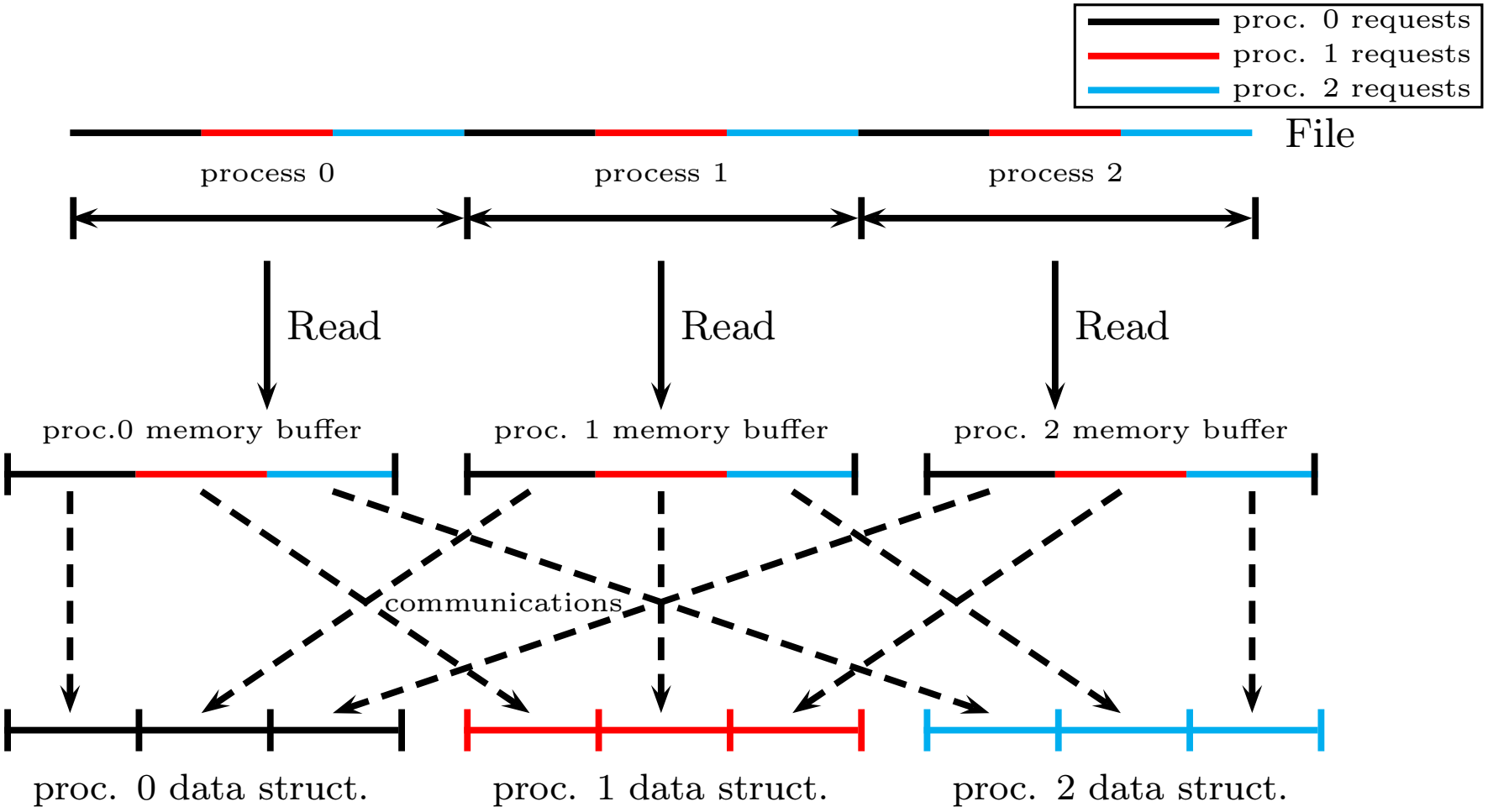

Figure 41 : Read operation performed in two steps by a group of processes

8 – MPI-IO
8.2 – File Manipulation

Working with files

- Opening and closing files are collective operations within the scope of a communicator.
- Opening a file generates a file handle, an opaque representation of the opened file. File handles can be subsequently used to access files in MPI I/O subroutines.
- Access modes describe the opening mode, access rights, etc. Modes are specified at the opening of a file, using predefined MPI constants that can be combined together.
- All the processes of the communicator participate in subsequent collective operations.
- We are only describing here the open/close subroutines but others file management operations are available (preallocation, deletion, etc.). For instance, `MPI_FILE_GET_INFO()` returns details on a file handle (information varies with implementations).

```
program open01
  use mpi
  implicit none

  integer :: fh,code

  call MPI_INIT(code)

  call MPI_FILE_OPEN(MPI_COMM_WORLD,"file.data", &
                     MPI_MODE_RDWR + MPI_MODE_CREATE,MPI_INFO_NULL,fh,code)
  IF (code /= MPI_SUCCESS) THEN
    PRINT *, 'Error in opening file'
    CALL MPI_ABORT(MPI_COMM_WORLD, 42, code)
  END IF

  call MPI_FILE_CLOSE(fh,code)
  IF (code /= MPI_SUCCESS) THEN
    PRINT *, 'Error in closing file'
    CALL MPI_ABORT(MPI_COMM_WORLD, 2, code)
  END IF
  call MPI_FINALIZE(code)

end program open01
```

```
> ls -l file.data

-rw-------   1 user   grp   0 Feb 08 12:13 file.data
```

Table 4 : Access modes which can be defined at the opening of files

Mode	Meaning
MPI_MODE_RDONLY	Read only
MPI_MODE_RDWR	Reading and writing
MPI_MODE_WRONLY	Write only
MPI_MODE_CREATE	Create the file if it does not exist
MPI_MODE_EXCL	Error if creating file that already exists
MPI_MODE_UNIQUE_OPEN	File will not be concurrently opened elsewhere
MPI_MODE_SEQUENTIAL	File will only be accessed sequentially
MPI_MODE_APPEND	Set initial position of all file pointers to end of file
MPI_MODE_DELETE_ON_CLOSE	Delete file on close

8 – MPI-IO
8.2 – File Manipulation

Error handling

- The behavior concerning code argument is different for the IO part of MPI.
- It's necessary to check the value of this argument.
- It's possible to change this behaviour with `MPI_FILE_SET_ERRHANDLER()`.
- Two error handlers are available : `MPI_ERRORS_ARE_FATAL` and `MPI_ERRORS_RETURN`.
- `MPI_COMM_SET_ERRHANDLER()` provides a way to change the error handler for the communications.

```
MPI_FILE_SET_ERRHANDLER(file,errhandler,code)

integer, intent(inout) :: file
integer, intent(in)    :: errhandler
integer, intent(out)   :: code
```

8 – MPI-IO
8.3 – Data access: Concepts

Data access routines

- MPI-IO proposes a broad range of subroutines for transferring data between files and memory.
- Subroutines can be distinguished through several properties:
  - The position in the file can be specified using an explicit offset (ie. an absolute position relative to the beginning of the file) or using individual or shared file pointers (ie. the offset is defined by the current value of pointers).
  - Data access can be blocking or non-blocking.
  - Sending and receiving messages can be collective (in the communicator group) or noncollective.
- Different access methods may be mixed within the same program.

Table 5 : Summary of the data access subroutines

Positioning	**Synchronism**	**Coordination**	
		noncollective	*collective*
explicit offsets	blocking	MPI_FILE_READ_AT MPI_FILE_WRITE_AT	MPI_FILE_READ_AT_ALL MPI_FILE_WRITE_AT_ALL
	nonblocking	MPI_FILE_IREAD_AT MPI_FILE_IWRITE_AT	MPI_FILE_READ_AT_ALL_BEGIN MPI_FILE_READ_AT_ALL_END MPI_FILE_WRITE_AT_ALL_BEGIN MPI_FILE_WRITE_AT_ALL_END

see next page

Positioning	**Synchronism**	**Coordination**	
		noncollective	*collective*
individual file pointers	blocking	MPI_FILE_READ MPI_FILE_WRITE	MPI_FILE_READ_ALL MPI_FILE_WRITE_ALL
	nonblocking	MPI_FILE_IREAD MPI_FILE_IWRITE	MPI_FILE_READ_ALL_BEGIN MPI_FILE_READ_ALL_END MPI_FILE_WRITE_ALL_BEGIN MPI_FILE_WRITE_ALL_END
shared file pointers	blocking	MPI_FILE_READ_SHARED MPI_FILE_WRITE_SHARED	MPI_FILE_READ_ORDERED MPI_FILE_WRITE_ORDERED
	nonblocking	MPI_FILE_IREAD_SHARED MPI_FILE_IWRITE_SHARED	MPI_FILE_READ_ORDERED_BEGIN MPI_FILE_READ_ORDERED_END MPI_FILE_WRITE_ORDERED_BEGIN MPI_FILE_WRITE_ORDERED_END

File Views

- By default, files are treated as a sequence of bytes but access patterns can also be expressed using predefined or derived MPI datatypes.
- This mechanism is called file views and is described in further detail later.
- For now, we only need to know that the views rely on an elementary data type and that the default type is `MPI_BYTE`.

8 – MPI-IO

8.4 – Noncollective data access

8.4.1 – Data access with explicit offsets

Explicit Offsets

- Explicit offset operations perform data access directly at the file position, given as an argument.
- The offset is expressed as a multiple of the elementary data type of the current view (therefore, the default offset unit is bytes).
- The datatype and the number of elements in the memory buffer are specified as arguments (ex: `MPI_INTEGER`)

```
program write_at
  use mpi
  implicit none

  integer, parameter                    :: nb_values=10
  integer                               :: i,rank,fh,code,bytes_in_integer
  integer(kind=MPI_OFFSET_KIND)         :: offset
  integer, dimension(nb_values)         :: values
  integer, dimension(MPI_STATUS_SIZE)   :: status

  call MPI_INIT(code)
  call MPI_COMM_RANK(MPI_COMM_WORLD,rank,code)
  values(:)= (/(i+rank*100,i=1,nb_values)/)
  print *, "Write process",rank, ":",values(:)

  call MPI_FILE_OPEN(MPI_COMM_WORLD,"data.dat",MPI_MODE_WRONLY + MPI_MODE_CREATE, &
                     MPI_INFO_NULL,fh,code)
  IF (code /= MPI_SUCCESS) THEN
    PRINT *, 'Error in opening file'
    CALL MPI_ABORT(MPI_COMM_WORLD, 42, code)
  END IF
  call MPI_TYPE_SIZE(MPI_INTEGER,bytes_in_integer,code)
  offset=rank*nb_values*bytes_in_integer

  call MPI_FILE_SET_ERRHANDLER(fh,MPI_ERRORS_ARE_FATAL,code)
  call MPI_FILE_WRITE_AT(fh,offset,values,nb_values,MPI_INTEGER, &
                         status,code)

  call MPI_FILE_CLOSE(fh,code)
  call MPI_FINALIZE(code)
end program write_at
```

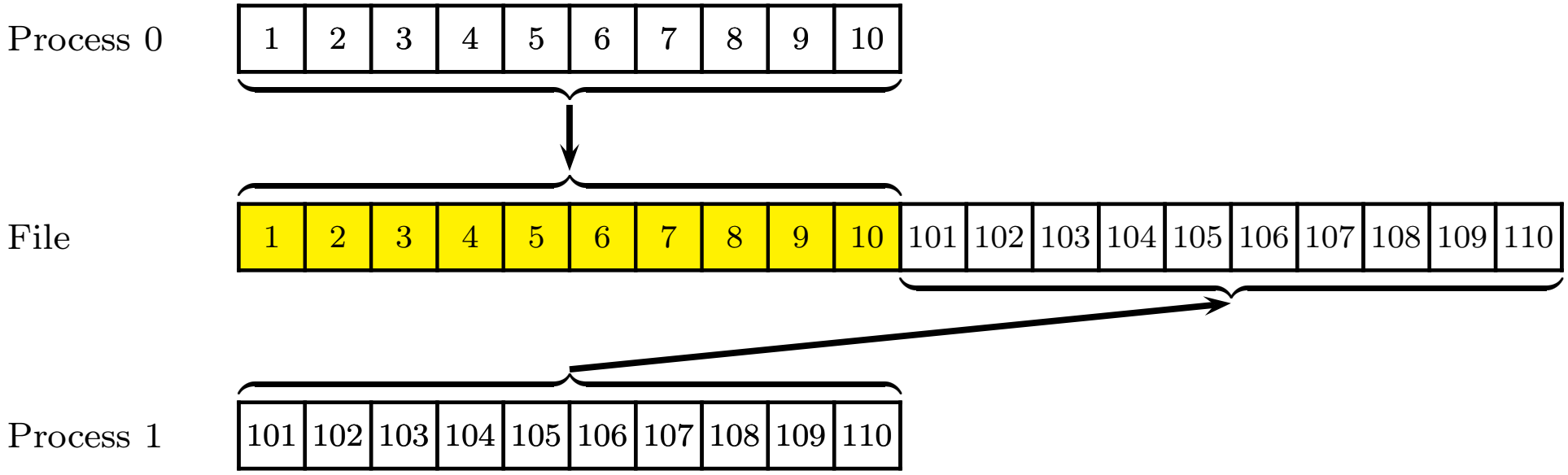

Figure 42 : MPI_FILE_WRITE_AT()

```
> mpiexec -n 2 write_at

Write process 0 :    1,    2,    3,    4,    5,    6,    7,    8,    9,   10
Write process 1 :  101,  102,  103,  104,  105,  106,  107,  108,  109,  110
```

```
program read_at

  use mpi
  implicit none

  integer, parameter                    :: nb_values=10
  integer                               :: rank,fh,code,bytes_in_integer
  integer(kind=MPI_OFFSET_KIND)          :: offset
  integer, dimension(nb_values)         :: values
  integer, dimension(MPI_STATUS_SIZE)  :: status

  call MPI_INIT(code)
  call MPI_COMM_RANK(MPI_COMM_WORLD,rank,code)

  call MPI_FILE_OPEN(MPI_COMM_WORLD,"data.dat",MPI_MODE_RDONLY,MPI_INFO_NULL, &
                     fh,code)

  call MPI_TYPE_SIZE(MPI_INTEGER,bytes_in_integer,code)

  offset=rank*nb_values*bytes_in_integer
  call MPI_FILE_READ_AT(fh,offset,values,nb_values,MPI_INTEGER, &
                        status,code)
  print *, "Read process",rank,":",values(:)

  call MPI_FILE_CLOSE(fh,code)
  call MPI_FINALIZE(code)

end program read_at
```

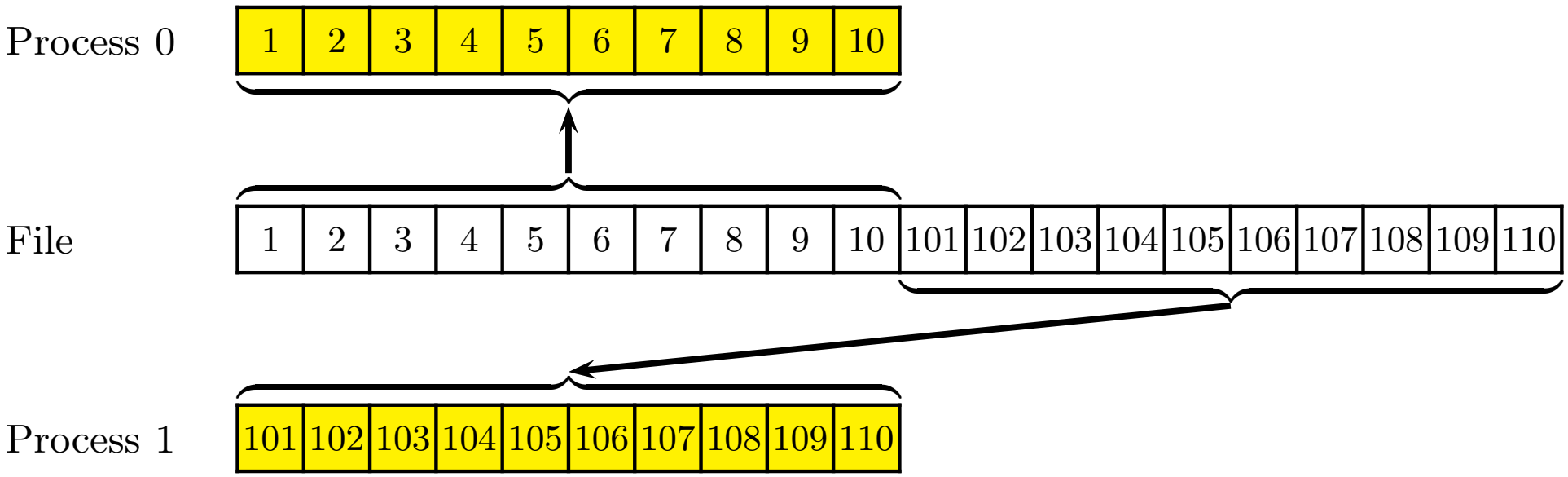

Figure 43 : MPI_FILE_READ_AT()

```
> mpiexec -n 2 read_at

Read process 0 :   1,   2,   3,   4,   5,   6,   7,   8,   9,  10
Read process 1 : 101, 102, 103, 104, 105, 106, 107, 108, 109, 110
```

8 – MPI-IO

8.4 – Noncollective data access

8.4.2 – Data access with individual file pointers

Individual file pointers

- MPI maintains one individual file pointer per process per file handle.
- The current value of this pointer implicitly specifies the offset in the data access routines.
- After an individual file pointer operation is initiated, the individual file pointer is updated to point to the next data item.
- The shared file pointer is neither used nor updated.

```
program read01

  use mpi
  implicit none

  integer, parameter                    :: nb_values=10
  integer                               :: rank,fh,code
  integer, dimension(nb_values)         :: values
  integer, dimension(MPI_STATUS_SIZE) :: status

  call MPI_INIT(code)
  call MPI_COMM_RANK(MPI_COMM_WORLD,rank,code)

  call MPI_FILE_OPEN(MPI_COMM_WORLD,"data.dat",MPI_MODE_RDONLY,MPI_INFO_NULL, &
                     fh,code)

  call MPI_FILE_READ(fh,values,6,MPI_INTEGER,status,code)
  call MPI_FILE_READ(fh,values(7),4,MPI_INTEGER,status,code)

  print *, "Read process",rank,":",values(:)

  call MPI_FILE_CLOSE(fh,code)
  call MPI_FINALIZE(code)

end program read01
```

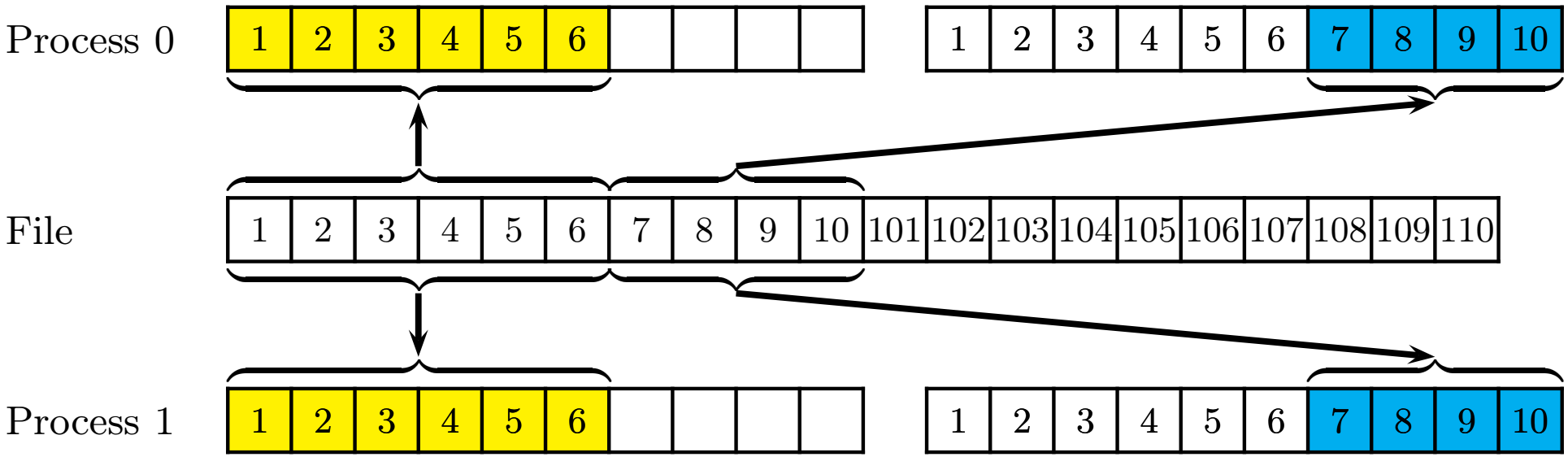

Figure 44 : Example 1 of `MPI_FILE_READ()`

```
> mpiexec -n 2 read01

Read process 1 :  1,  2,  3,  4,  5,  6,  7,  8,  9,  10
Read process 0 :  1,  2,  3,  4,  5,  6,  7,  8,  9,  10
```

```
program read02
  use mpi
  implicit none

  integer, parameter                    :: nb_values=10
  integer                               :: rank,fh,code
  integer, dimension(nb_values)         :: values=0
  integer, dimension(MPI_STATUS_SIZE) :: status

  call MPI_INIT(code)
  call MPI_COMM_RANK(MPI_COMM_WORLD,rank,code)

  call MPI_FILE_OPEN(MPI_COMM_WORLD,"data.dat",MPI_MODE_RDONLY,MPI_INFO_NULL, &
                     fh,code)

  if (rank == 0) then
     call MPI_FILE_READ(fh,values,5,MPI_INTEGER,status,code)
  else
     call MPI_FILE_READ(fh,values,8,MPI_INTEGER,status,code)
     call MPI_FILE_READ(fh,values,5,MPI_INTEGER,status,code)
  end if

  print *, "Read process",rank,":",values(1:8)

  call MPI_FILE_CLOSE(fh,code)
  call MPI_FINALIZE(code)
end program read02
```

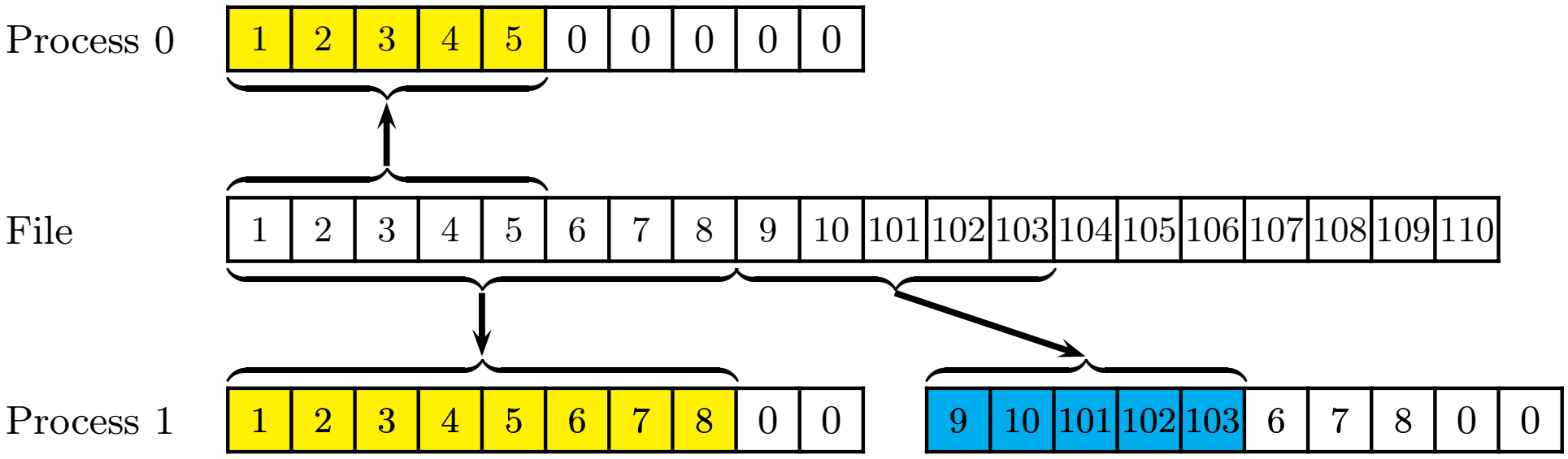

Figure 45 : Example 2 of `MPI_FILE_READ()`

```
> mpiexec -n 2 read02

Read process 0 :  1,   2,   3,   4,   5,   0,   0,   0
Read process 1 :  9,  10, 101, 102, 103,   6,   7,   8
```

8 – MPI-IO

8.4 – Noncollective data access

8.4.3 – Data access with shared file pointers

Shared file pointer

- MPI maintains only one shared file pointer per collective `MPI_FILE_OPEN` (shared among processes in the communicator group).
- All processes must use the same file view.
- For the noncollective shared file pointer routines, the serialisation ordering is not deterministic. To enforce a specific order, the user needs to use other synchronisation means or use collective variants.
- After a shared file pointer operation, the shared file pointer is updated to point to the next data item, that is, just after the last one accessed by the operation.
- The individual file pointers are neither used nor updated.

```
program read_shared01

  use mpi
  implicit none

  integer                              :: rank,fh,code
  integer, parameter                   :: nb_values=10
  integer, dimension(nb_values)        :: values
  integer, dimension(MPI_STATUS_SIZE) :: status

  call MPI_INIT(code)
  call MPI_COMM_RANK(MPI_COMM_WORLD,rank,code)

  call MPI_FILE_OPEN(MPI_COMM_WORLD,"data.dat",MPI_MODE_RDONLY,MPI_INFO_NULL, &
                     fh,code)

  call MPI_FILE_READ_SHARED(fh,values,4,MPI_INTEGER,status,code)
  call MPI_FILE_READ_SHARED(fh,values(5),6,MPI_INTEGER,status,code)

  print *, "Read process",rank,":",values(:)

  call MPI_FILE_CLOSE(fh,code)
  call MPI_FINALIZE(code)

end program read_shared01
```

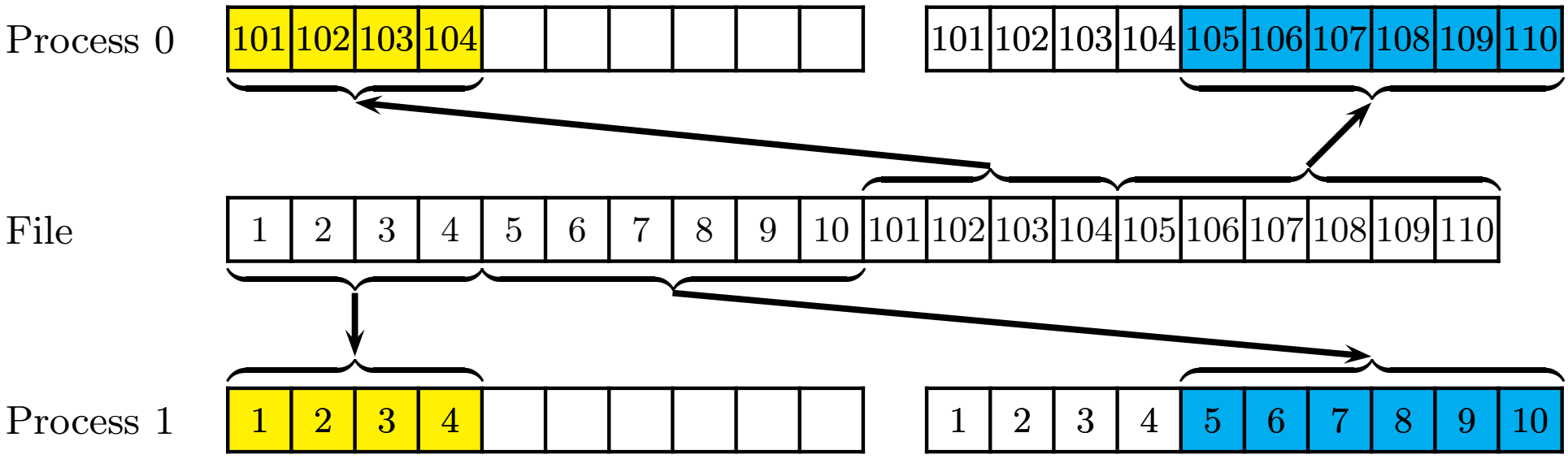

Figure 46 : Example of `MPI_FILE_READ_SHARED()`

```
> mpiexec -n 2 read_shared01

Read process  1 :   1,   2,   3,   4,   5,   6,   7,   8,   9,  10
Read process  0 : 101, 102, 103, 104, 105, 106, 107, 108, 109, 110
```

8 – MPI-IO
8.5 – Collective data access

Collective data access

- Collective operations require the participation of all the processes within the communicator group associated with the file handle.
- Collective operations may perform much better than their noncollective counterparts, as global data accesses have significant potential for automatic optimisation.
- For the collective shared file pointer routines, the accesses to the file will be in the order determined by the ranks of the processes within the group. The ordering is therefore deterministic.

8 – MPI-IO

8.5 – Collective data access

8.5.1 – Data access with explicit offsets

```
program read_at_all
  use mpi
  implicit none

  integer, parameter                    :: nb_values=10
  integer                               :: rank,fh,code,bytes_in_integer
  integer(kind=MPI_OFFSET_KIND)         :: offset_file
  integer, dimension(nb_values)        :: values
  integer, dimension(MPI_STATUS_SIZE) :: status

  call MPI_INIT(code)
  call MPI_COMM_RANK(MPI_COMM_WORLD,rank,code)

  call MPI_FILE_OPEN(MPI_COMM_WORLD,"data.dat",MPI_MODE_RDONLY,MPI_INFO_NULL, &
                     fh,code)

  call MPI_TYPE_SIZE(MPI_INTEGER,bytes_in_integer,code)
  offset_file=rank*nb_values*bytes_in_integer
  call MPI_FILE_READ_AT_ALL(fh,offset_file,values,nb_values, &
                            MPI_INTEGER,status,code)
  print *, "Read process",rank,":",values(:)

  call MPI_FILE_CLOSE(fh,code)
  call MPI_FINALIZE(code)
end program read_at_all
```

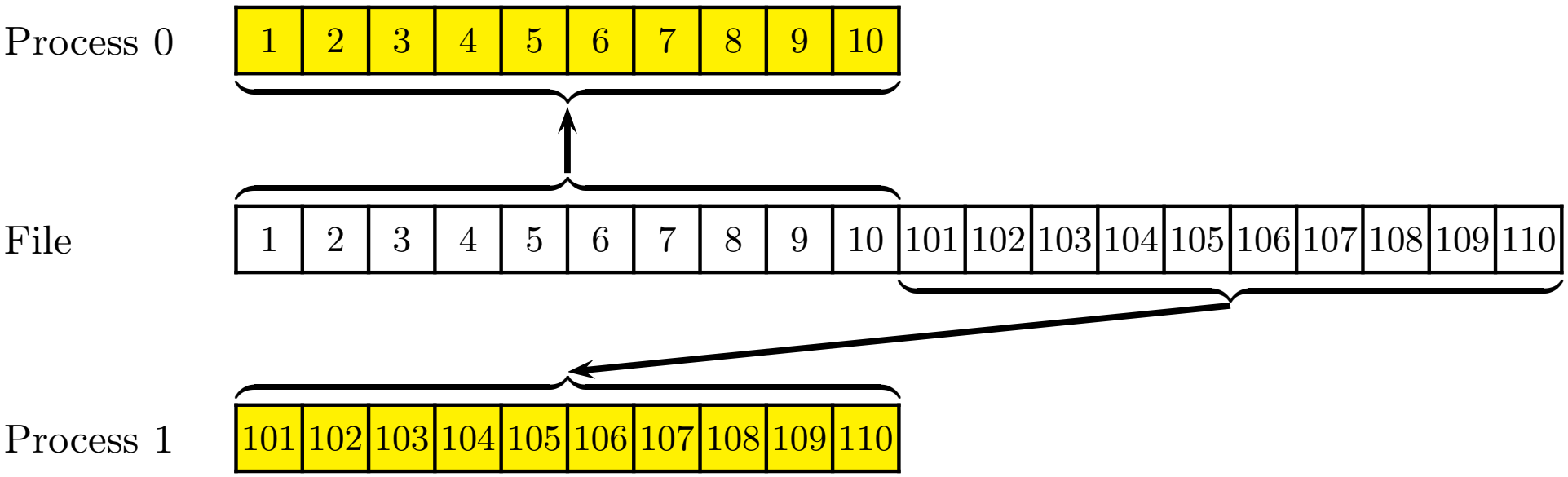

Figure 47 : Example of `MPI_FILE_READ_AT_ALL()`

```
> mpiexec -n 2 read_at_all

Read process 0 :   1,   2,   3,   4,   5,   6,   7,   8,   9,  10
Read process 1 : 101, 102, 103, 104, 105, 106, 107, 108, 109, 110
```

8 – MPI-IO

8.5 – Collective data access

8.5.2 – Data access with individual file pointers

```
program read_all01
  use mpi
  implicit none

  integer                              :: rank,fh,code
  integer, parameter                   :: nb_values=10
  integer, dimension(nb_values)        :: values
  integer, dimension(MPI_STATUS_SIZE) :: status

  call MPI_INIT(code)
  call MPI_COMM_RANK(MPI_COMM_WORLD,rank,code)

  call MPI_FILE_OPEN(MPI_COMM_WORLD,"data.dat",MPI_MODE_RDONLY,MPI_INFO_NULL, &
                     fh,code)

  call MPI_FILE_READ_ALL(fh,values,4,MPI_INTEGER,status,code)
  call MPI_FILE_READ_ALL(fh,values(5),6,MPI_INTEGER,status,code)

  print *, "Read process ",rank, ":",values(:)

  call MPI_FILE_CLOSE(fh,code)
  call MPI_FINALIZE(code)
end program read_all01
```

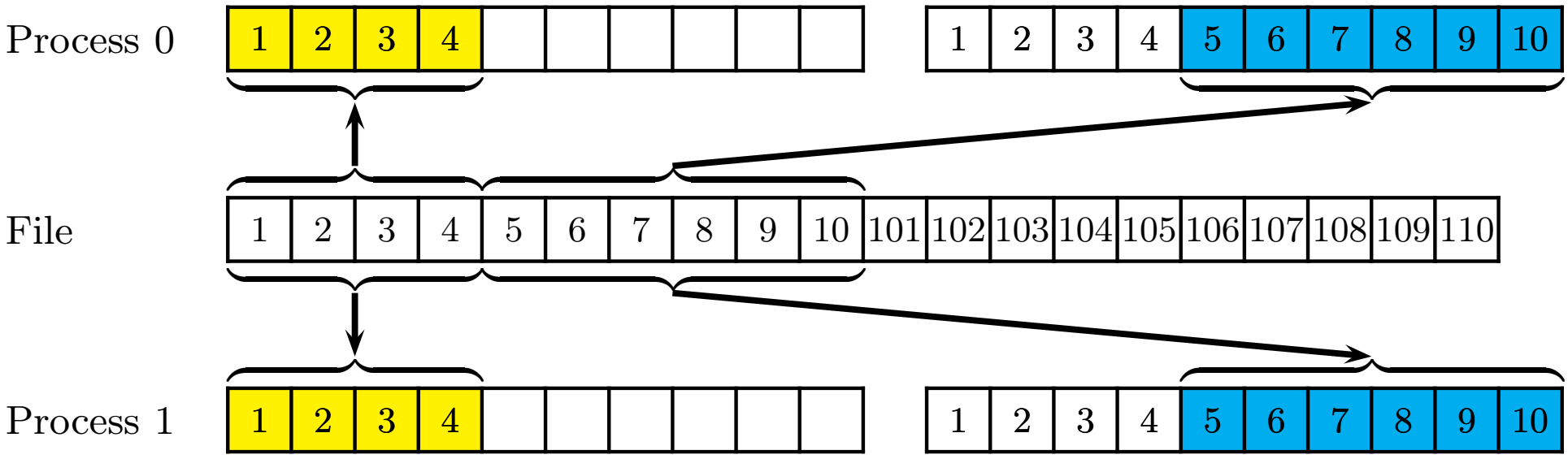

Figure 48 : Example 1 of `MPI_FILE_READ_ALL()`

```
> mpiexec -n 2 read_all01

Read process 0 : 1, 2, 3, 4, 5, 6, 7, 8, 9, 10
Read process 1 : 1, 2, 3, 4, 5, 6, 7, 8, 9, 10
```

```
program read_all02
  use mpi
  implicit none

  integer, parameter                    :: nb_values=10
  integer                               :: rank,fh,index1,index2,code
  integer, dimension(nb_values)         :: values=0
  integer, dimension(MPI_STATUS_SIZE) :: status

  call MPI_INIT(code)
  call MPI_COMM_RANK(MPI_COMM_WORLD,rank,code)
  call MPI_FILE_OPEN(MPI_COMM_WORLD,"data.dat",MPI_MODE_RDONLY,MPI_INFO_NULL, &
                     fh,code)

  if (rank == 0) then
     index1=3
     index2=6
  else
     index1=5
     index2=9
  end if

  call MPI_FILE_READ_ALL(fh,values(index1),index2-index1+1, &
                         MPI_INTEGER,status,code)
  print *, "Read process",rank,":",values(:)

  call MPI_FILE_CLOSE(fh,code)
  call MPI_FINALIZE(code)
end program read_all02
```

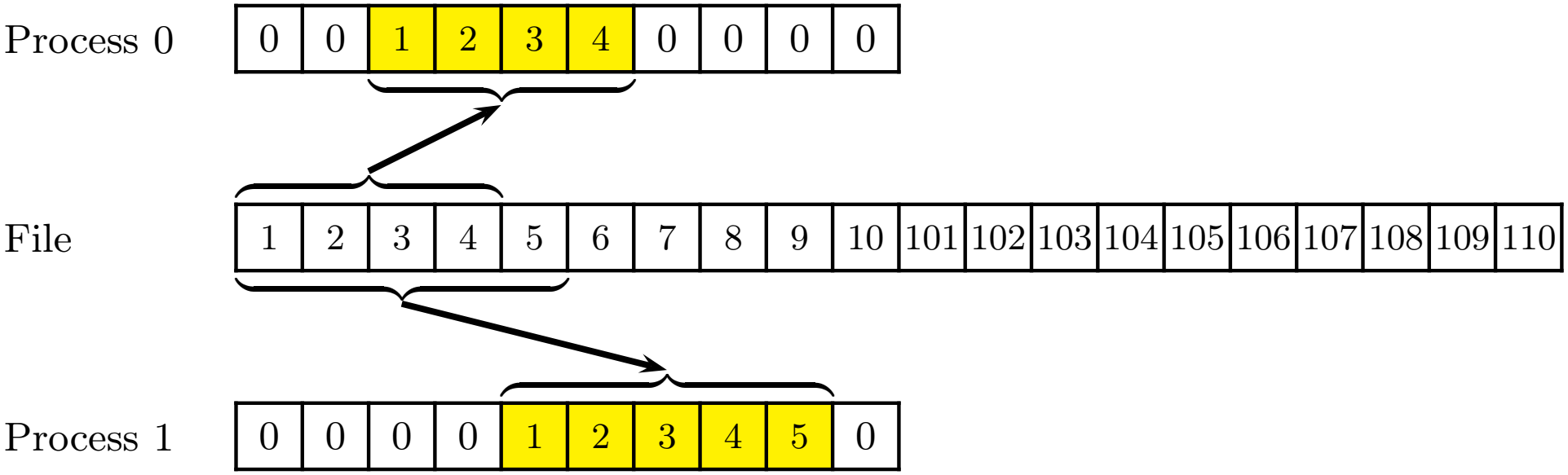

Figure 49 : Example 2 of `MPI_FILE_READ_ALL()`

```
> mpiexec -n 2 read_all02

Read process 1 : 0, 0, 0, 0, 1, 2, 3, 4, 5, 0
Read process 0 : 0, 0, 1, 2, 3, 4, 0, 0, 0, 0
```

```
1  program read_all03
2    use mpi
3    implicit none
4
5    integer, parameter                    :: nb_values=10
6    integer                               :: rank,fh,code
7    integer, dimension(nb_values)       :: values=0
8    integer, dimension(MPI_STATUS_SIZE) :: status
9
10   call MPI_INIT(code)
11   call MPI_COMM_RANK(MPI_COMM_WORLD,rank,code)
12
13   call MPI_FILE_OPEN(MPI_COMM_WORLD,"data.dat",MPI_MODE_RDONLY,MPI_INFO_NULL, &
14                      fh,code)
15
16   if (rank == 0) then
17      call MPI_FILE_READ_ALL(fh,values(3),4,MPI_INTEGER,status,code)
18   else
19      call MPI_FILE_READ_ALL(fh,values(5),5,MPI_INTEGER,status,code)
20   end if
21
22   print *, "Read process",rank,":",values(:)
23
24   call MPI_FILE_CLOSE(fh,code)
25   call MPI_FINALIZE(code)
26 end program read_all03
```

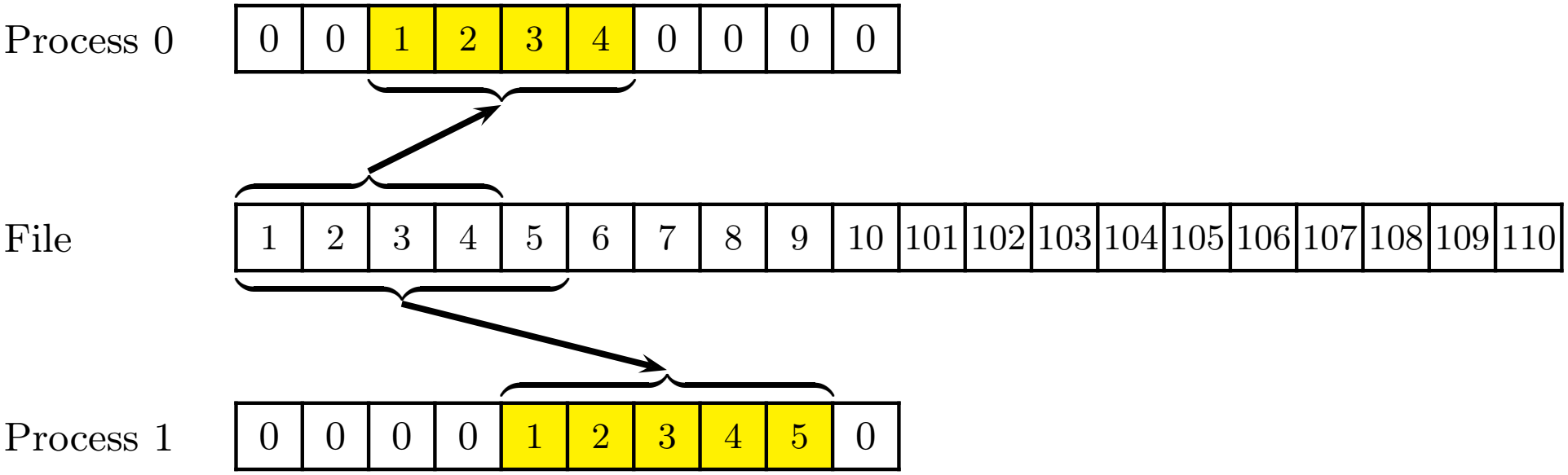

Figure 50 : Example 3 of `MPI_FILE_READ_ALL()`

```
> mpiexec -n 2 read_all03

Read process 1 : 0, 0, 0, 0, 1, 2, 3, 4, 5, 0
Read process 0 : 0, 0, 1, 2, 3, 4, 0, 0, 0, 0
```

8 – MPI-IO

8.5 – Collective data access

8.5.3 – Data access with shared file pointers

```
program read_ordered
  use mpi
  implicit none

  integer                                :: rank,fh,code
  integer, parameter                     :: nb_values=10
  integer, dimension(nb_values)         :: values
  integer, dimension(MPI_STATUS_SIZE) :: status

  call MPI_INIT(code)
  call MPI_COMM_RANK(MPI_COMM_WORLD,rank,code)

  call MPI_FILE_OPEN(MPI_COMM_WORLD,"data.dat",MPI_MODE_RDONLY,MPI_INFO_NULL, &
                     fh,code)

  call MPI_FILE_READ_ORDERED(fh,values,4,MPI_INTEGER,status,code)
  call MPI_FILE_READ_ORDERED(fh,values(5),6,MPI_INTEGER,status,code)

  print *, "Read process",rank,":",values(:)

  call MPI_FILE_CLOSE(fh,code)
  call MPI_FINALIZE(code)
end program read_ordered
```

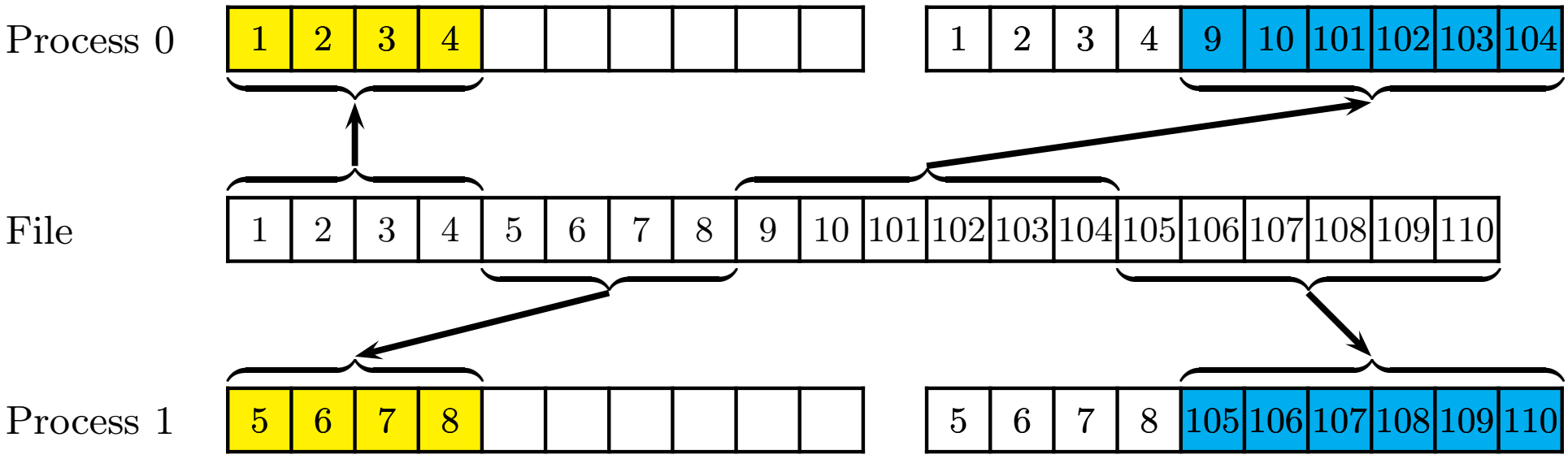

Figure 51 : Example of `MPI_FILE_ORDERED()`

```
> mpiexec -n 2 read_ordered

Read process 1 : 5, 6, 7, 8, 105, 106, 107, 108, 109, 110
Read process 0 : 1, 2, 3, 4,   9,  10, 101, 102, 103, 104
```

8 – MPI-IO
8.6 – Positioning the file pointers

Positioning the file pointers

- `MPI_FILE_GET_POSITION()` and `MPI_FILE_GET_POSITION_SHARED()` returns the current position of the individual pointers and the shared file pointer (respectively).
- `MPI_FILE_SEEK()` and `MPI_FILE_SEEK_SHARED()` updates the file pointer values by using the following possible modes:
  - `MPI_SEEK_SET`: The pointer is set to offset.
  - `MPI_SEEK_CUR`: The pointer is set to the current pointer position plus offset.
  - `MPI_SEEK_END`: The pointer is set to the end of file plus offset.
- The offset can be negative, which allows seeking backwards.

```
program seek
  use mpi
  implicit none
  integer, parameter                    :: nb_values=10
  integer                               :: rank,fh,bytes_in_integer,code
  integer(kind=MPI_OFFSET_KIND)         :: offset
  integer, dimension(nb_values)         :: values
  integer, dimension(MPI_STATUS_SIZE)   :: status

  call MPI_INIT(code)
  call MPI_COMM_RANK(MPI_COMM_WORLD,rank,code)
  call MPI_FILE_OPEN(MPI_COMM_WORLD,"data.dat",MPI_MODE_RDONLY,MPI_INFO_NULL, &
                     fh,code)

  call MPI_FILE_READ(fh,values,3,MPI_INTEGER,status,code)
  call MPI_TYPE_SIZE(MPI_INTEGER,bytes_in_integer,code)
  offset=8*bytes_in_integer
  call MPI_FILE_SEEK(fh,offset,MPI_SEEK_CUR,code)
  call MPI_FILE_READ(fh,values(4),3,MPI_INTEGER,status,code)
  offset=4*bytes_in_integer
  call MPI_FILE_SEEK(fh,offset,MPI_SEEK_SET,code)
  call MPI_FILE_READ(fh,values(7),4,MPI_INTEGER,status,code)

  print *, "Read process",rank,":",values(:)

  call MPI_FILE_CLOSE(fh,code)
  call MPI_FINALIZE(code)
end program seek
```

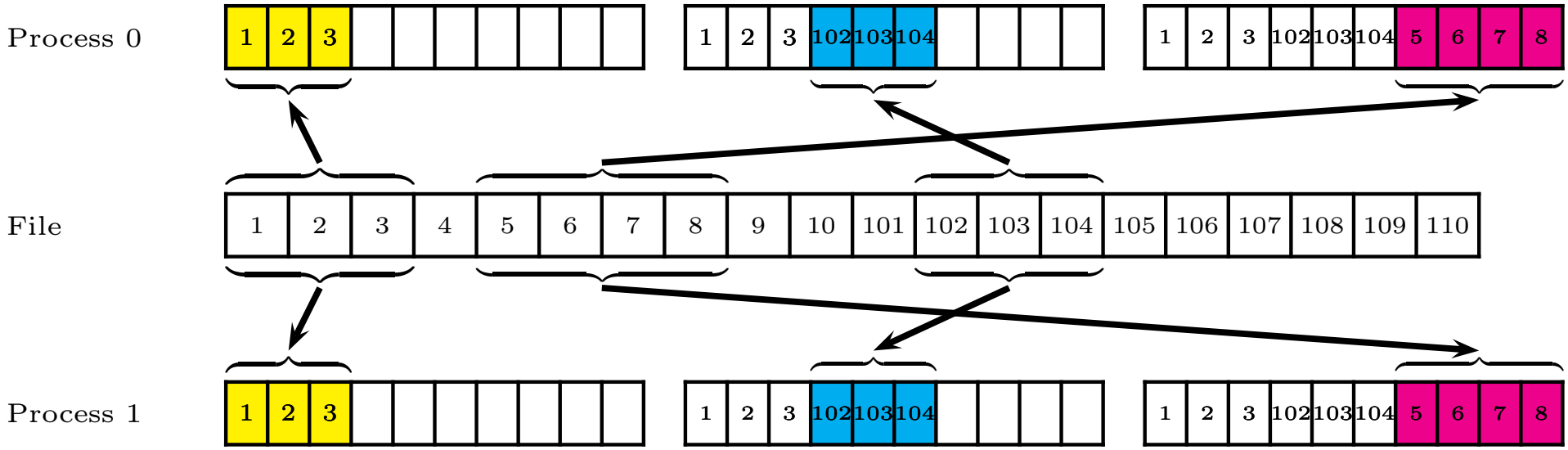

Figure 52 : Example of `MPI_FILE_SEEK()`

```
> mpiexec -n 2 seek

Read process 1 : 1, 2, 3, 102, 103, 104, 5, 6, 7, 8
Read process 0 : 1, 2, 3, 102, 103, 104, 5, 6, 7, 8
```

8 – MPI-IO
8.7 – File Views
8.7.1 – Definition

The View Mechanism

- File Views is a mechanism which accesses data in a high-level way. A view describes a template for accessing a file.
- The view that a given process has of an open file is defined by three components: the elementary data type, file type and an initial displacement.
- The view is determined by the repetition of the filetype pattern, beginning at the displacement.

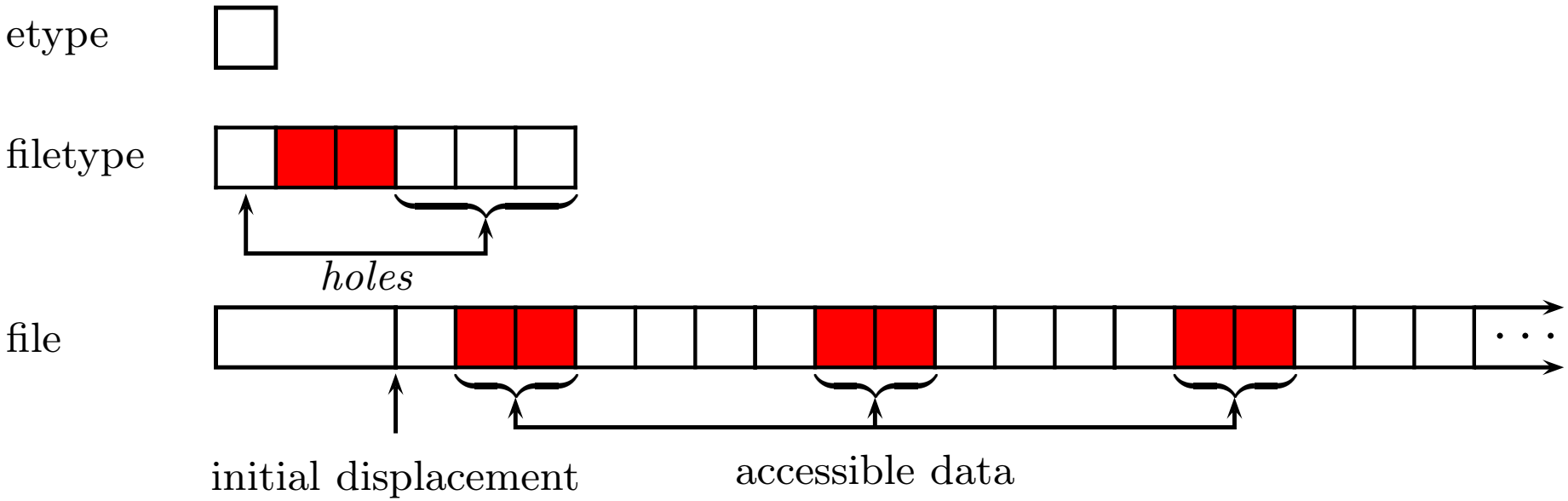

The View Mechanism

- File Views are defined using MPI datatypes.
- Derived datatypes can be used to structure accesses to the file. For example, elements can be skipped during data access.
- The default view is a linear byte stream (displacement is zero, etype and filetype equal to `MPI_BYTE`).

Multiple Views

- Each process can successively use several views on the same file.
- Each process can define its own view of the file and access complementary parts of it.

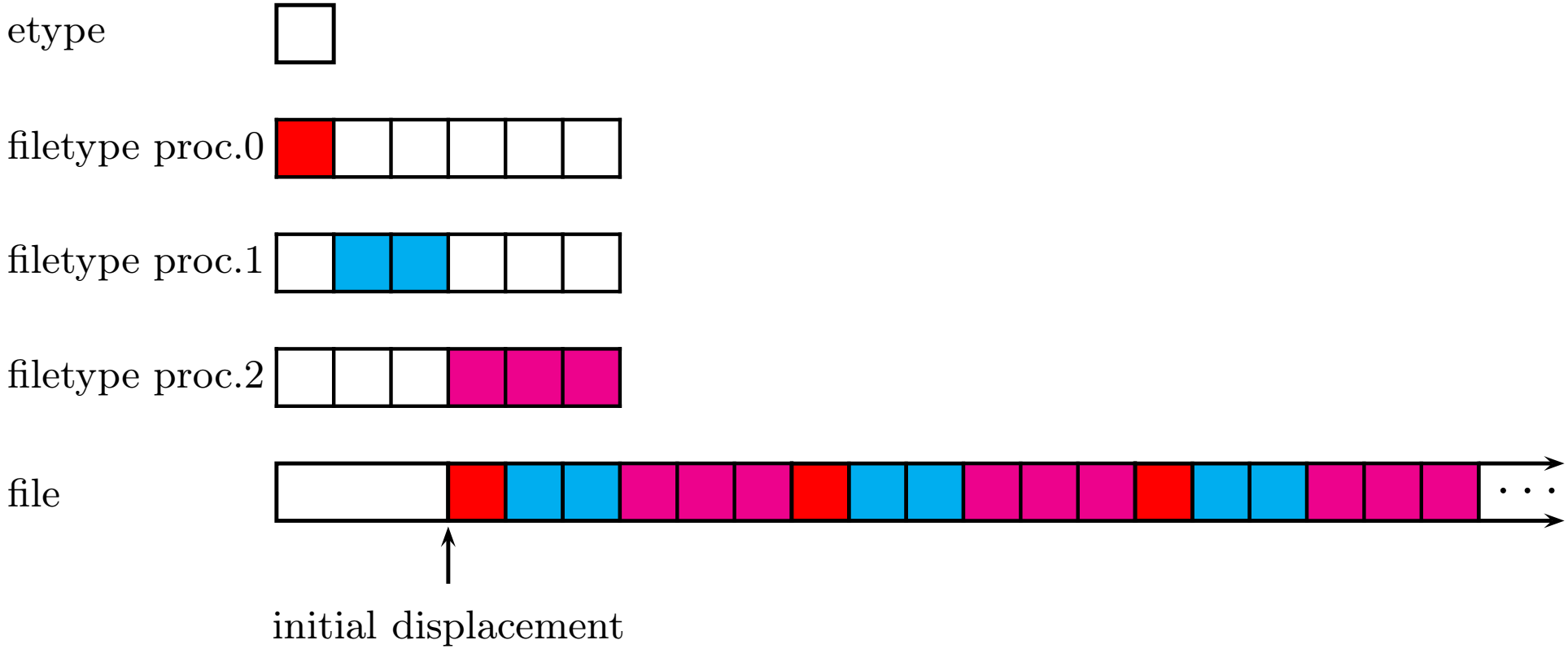

Figure 54 : Separate views, each using a different filetype, can be used to access the file

Limitations:

- Shared file pointer routines are not useable except when all the processes have the same file view.
- If the file is opened for writing, neither the etype nor the filetype is permitted to contain overlapping regions.

Changing the process's view of the data in the file: MPI_FILE_SET_VIEW()

```
MPI_FILE_SET_VIEW(fh, displacement,etype,filetype,
                  mode,info,code)

integer :: fh
integer(kind=MPI_OFFSET_KIND) :: displacement
integer :: etype
integer :: filetype
character(len=*) :: mode
integer :: info
integer :: code
```

- This operation is collective throughout the file handle.The values for the initial displacement and the filetype may vary between the processes in the group. The extents of elementary types must be identical.
- In addition, the individual file pointers and the shared file pointer are reset to zero.

Notes :

- The datatypes passed in must have been committed using the MPI_TYPE_COMMIT() subroutine.
- MPI defines three data representations (mode): "native", "internal" or "external32".

Example 1: Reading non-overlapping sequences of data segments in parallel

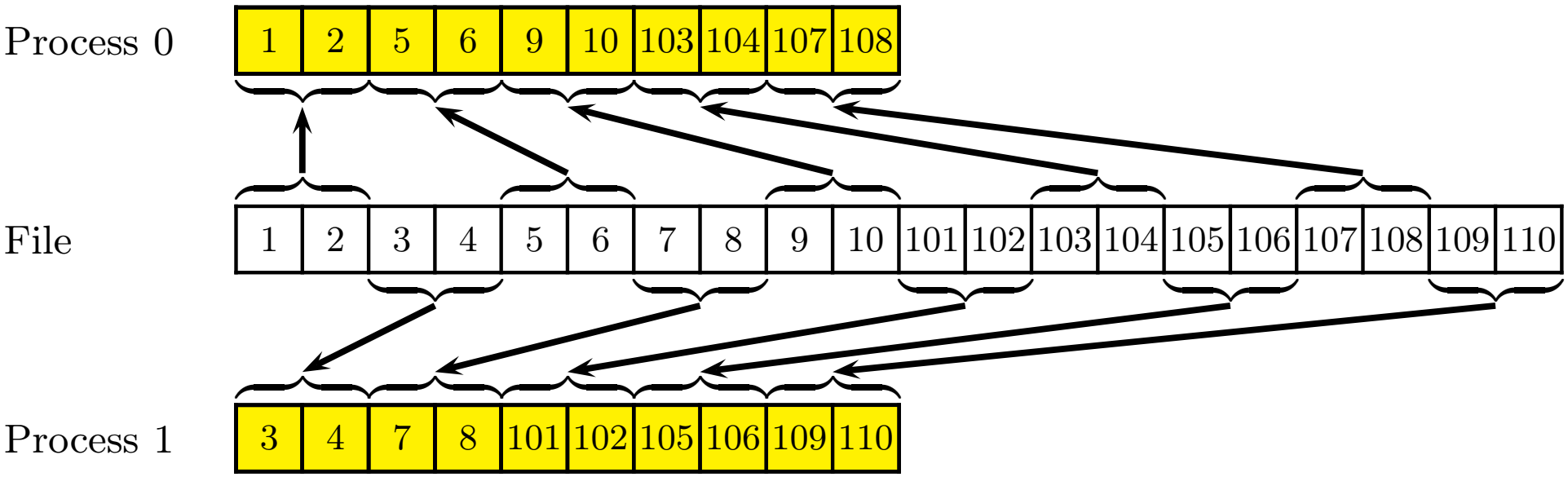


```
> mpiexec -n 2 read_view01

Read process 1 : 3, 4, 7, 8, 101, 102, 105, 106, 109, 110
Read process 0 : 1, 2, 5, 6,   9,  10, 103, 104, 107, 108
```

Example 1 (continued)

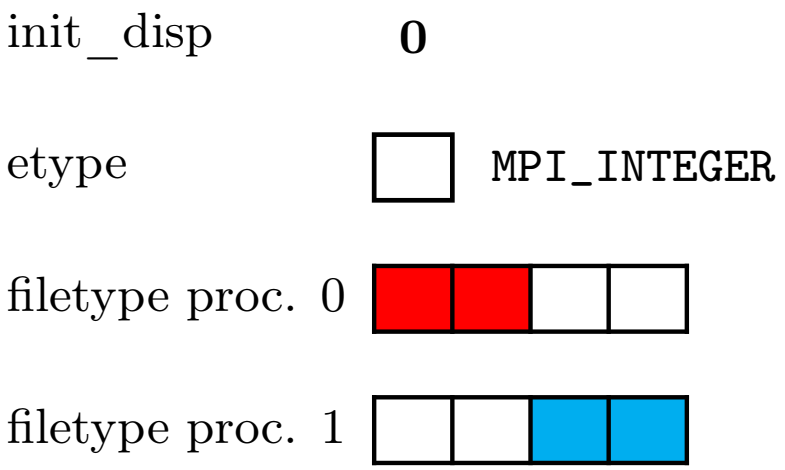


```
if (rank == 0) coord=1
if (rank == 1) coord=3

call MPI_TYPE_CREATE_SUBARRAY(1,(/4/),(/2/),(/coord - 1/), &
                              MPI_ORDER_FORTRAN,MPI_INTEGER,filetype,code)
call MPI_TYPE_COMMIT(filetype,code)

! Using an intermediate variable for portability reasons
init_displacement=0

call MPI_FILE_SET_VIEW(handle,init_displacement,MPI_INTEGER,filetype, &
                       "native",MPI_INFO_NULL,code)
```

```
program read_view01
  use mpi
  implicit none
  integer, parameter                    :: nb_values=10
  integer                               :: rank,handle,coord,filetype,code
  integer(kind=MPI_OFFSET_KIND)          :: init_displacement
  integer, dimension(nb_values)         :: values
  integer, dimension(MPI_STATUS_SIZE)  :: status

  call MPI_INIT(code)
  call MPI_COMM_RANK(MPI_COMM_WORLD,rank,code)

  if (rank == 0) coord=1
  if (rank == 1) coord=3

  call MPI_TYPE_CREATE_SUBARRAY(1,(/4/),(/2/),(/coord - 1/), &
                                MPI_ORDER_FORTRAN,MPI_INTEGER,filetype,code)
  call MPI_TYPE_COMMIT(filetype,code)

  call MPI_FILE_OPEN(MPI_COMM_WORLD,"data.dat",MPI_MODE_RDONLY,MPI_INFO_NULL, &
                     handle,code)

  init_displacement=0
  call MPI_FILE_SET_VIEW(handle,init_displacement,MPI_INTEGER,filetype, &
                         "native",MPI_INFO_NULL,code)
  call MPI_FILE_READ(handle,values,nb_values,MPI_INTEGER,status,code)

  print *, "Read process",rank,":",values(:)

  call MPI_FILE_CLOSE(handle,code)
  call MPI_FINALIZE(code)

end program read_view01
```

Example 2: Reading data using successive views


```
program read_view02

  use mpi
  implicit none

  integer, parameter                    :: nb_values=10
  integer                               :: rank,handle,code, &
                                           filetype_1,filetype_2,nb_octets_entier
  integer(kind=MPI_OFFSET_KIND)         :: init_displacement
  integer, dimension(nb_values)        :: values
  integer, dimension(MPI_STATUS_SIZE) :: status

  call MPI_INIT(code)
  call MPI_COMM_RANK(MPI_COMM_WORLD,rank,code)
```

```
15    call MPI_TYPE_CREATE_SUBARRAY(1,(/4/),(/2/),(/0/), &
16                                  MPI_ORDER_FORTRAN,MPI_INTEGER,filetype_1,code)
17    call MPI_TYPE_COMMIT(filetype_1,code)
18
19    call MPI_TYPE_CREATE_SUBARRAY(1,(/3/),(/1/),(/2/), &
20                                  MPI_ORDER_FORTRAN,MPI_INTEGER,filetype_2,code)
21    call MPI_TYPE_COMMIT(filetype_2,code)
22
23    call MPI_FILE_OPEN(MPI_COMM_WORLD,"data.dat",MPI_MODE_RDONLY,MPI_INFO_NULL, &
24                       handle,code)
25
26    ! Read using the first view
27    init_displacement=0
28    call MPI_FILE_SET_VIEW(handle,init_displacement,MPI_INTEGER,filetype_1, &
29                           "native",MPI_INFO_NULL,code)
30    call MPI_FILE_READ(handle,values,4,MPI_INTEGER,status,code)
31    call MPI_FILE_READ(handle,values(5),3,MPI_INTEGER,status,code)
32
33    ! Read using the second view
34    call MPI_TYPE_SIZE(MPI_INTEGER,nb_octets_entier,code)
35    init_displacement=2*nb_octets_entier
36    call MPI_FILE_SET_VIEW(handle,init_displacement,MPI_INTEGER,filetype_2, &
37                           "native",MPI_INFO_NULL,code)
38    call MPI_FILE_READ(handle,values(8),3,MPI_INTEGER,status,code)
39
40    print *, "Read process",rank,":",values(:)
41
42    call MPI_FILE_CLOSE(handle,code)
43    call MPI_FINALIZE(code)
44  end program read_view02
```

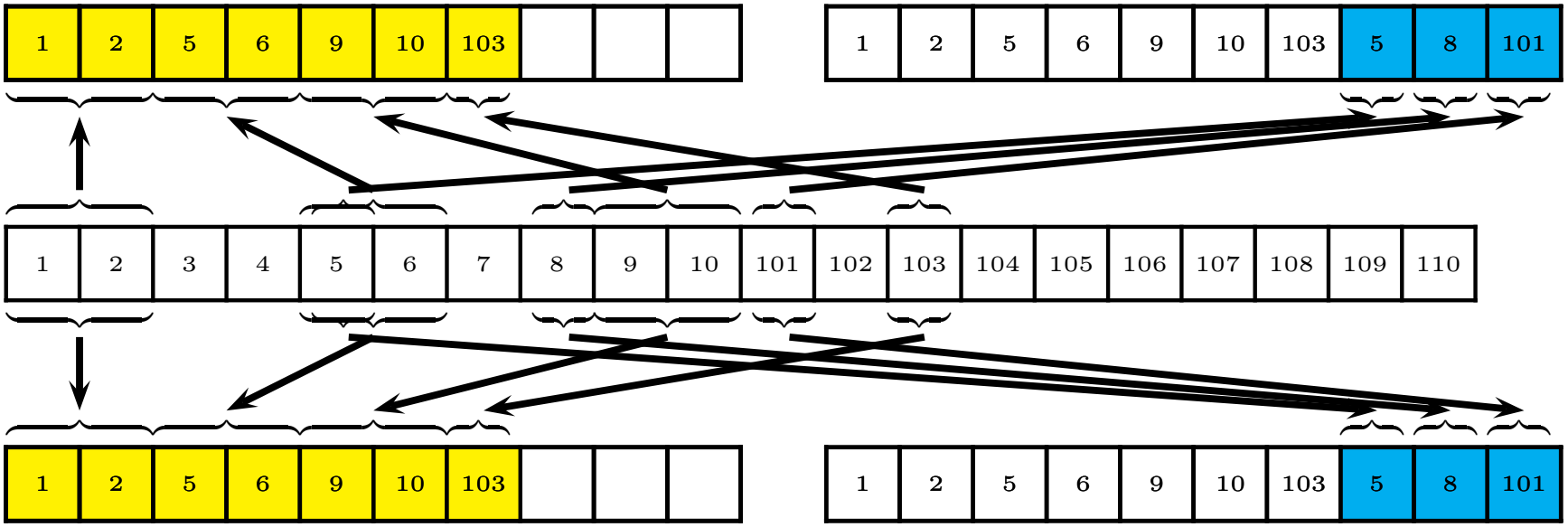


```
> mpiexec -n 2 read_view02

Read process 1 : 1, 2, 5, 6, 9, 10, 103, 5, 8, 101
Read process 0 : 1, 2, 5, 6, 9, 10, 103, 5, 8, 101
```

Example 3: Dealing with holes in datatypes

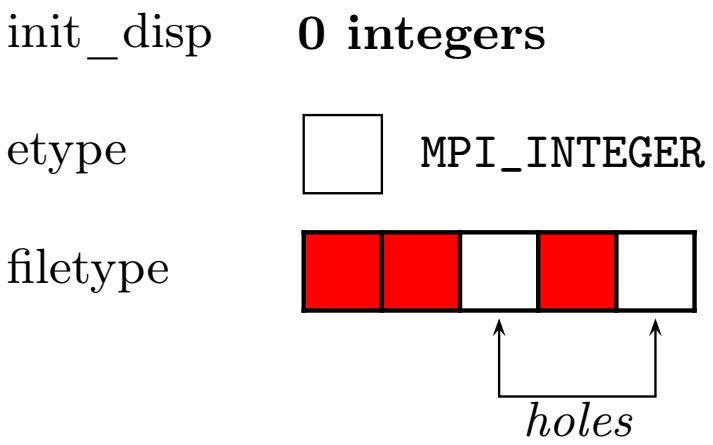


```
program read_view_03_indexed

  use mpi
  implicit none

  integer, parameter                          :: nb_values=9
  integer                                     :: rank,handle,bytes_in_integer,code
  integer                                     :: filetype_tmp,filetype
  integer(kind=MPI_OFFSET_KIND)               :: init_displacement
  integer(kind=MPI_ADDRESS_KIND)              :: lb,extent
  integer, dimension(2)                       :: blocklens,indices
  integer, dimension(nb_values)              :: values
  integer, dimension(MPI_STATUS_SIZE)         :: status

  call MPI_INIT(code)
  call MPI_COMM_RANK(MPI_COMM_WORLD,rank,code)

```

```
18    ! filetype_tmp: MPI type with an extent of 4*MPI_INTEGER
19    indices(1)=0
20    blocklens(1)=2
21    indices(2)=3
22    blocklens(2)=1
23    call MPI_TYPE_INDEXED(2,blocklens,indices,MPI_INTEGER,filetype_tmp,code)
24
25    ! filetype: MPI type with an extent of 5*MPI_INTEGER
26    call MPI_TYPE_SIZE(MPI_INTEGER,bytes_in_integer,code)
27    call MPI_TYPE_GET_EXTENT(filetype_tmp,lb,extent,code)
28    extent = extent + bytes_in_integer
29    call MPI_TYPE_CREATE_RESIZED(filetype_tmp,lb,lb+extent,filetype,code)
30    call MPI_TYPE_COMMIT(filetype,code)
31
32    call MPI_FILE_OPEN(MPI_COMM_WORLD,"data.dat",MPI_MODE_RDONLY,MPI_INFO_NULL, &
33                       handle,code)
34
35    init_displacement=0
36    call MPI_FILE_SET_VIEW(handle,init_displacement,MPI_INTEGER,filetype, &
37                           "native",MPI_INFO_NULL,code)
38
39    call MPI_FILE_READ(handle,values,9,MPI_INTEGER,status,code)
40
41    print *,"Read process",rank,":",values(:)
42
43    call MPI_FILE_CLOSE(handle,code)
44    call MPI_FINALIZE(code)
45
46  end program read_view03_indexed
```

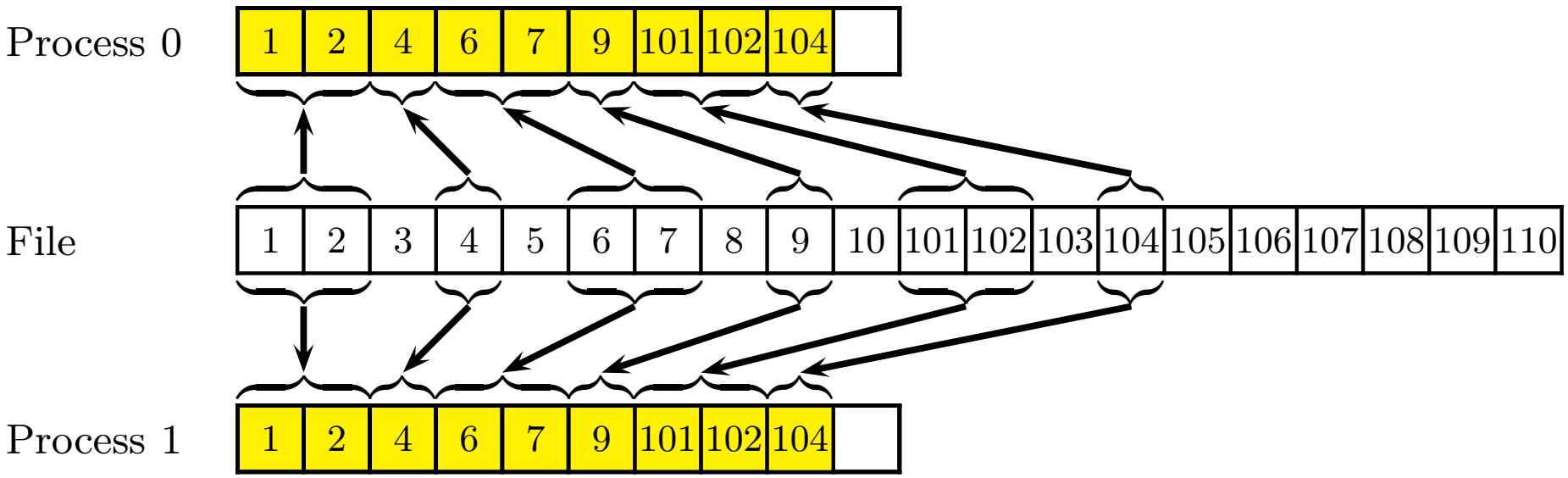


```
> mpiexec -n 2 read_view03

Lecture, processus 0 : 1, 2, 4, 6, 7, 9, 101, 102, 104
Lecture, processus 1 : 1, 2, 4, 6, 7, 9, 101, 102, 104
```

Example 3 (cont.): Alternative implementation using a structure type

```
program read_view03_struct

  [...]

  call MPI_TYPE_CREATE_SUBARRAY(1,(/3/),(/2/),(/0/),MPI_ORDER_FORTRAN, &
       MPI_INTEGER,tmp_filetype1,code)

  call MPI_TYPE_CREATE_SUBARRAY(1,(/2/),(/1/),(/0/),MPI_ORDER_FORTRAN, &
       MPI_INTEGER,tmp_filetype2,code)

  call MPI_TYPE_SIZE(MPI_INTEGER,bytes_in_integer,code)

  displacements(1) = 0
  displacements(2) = 3*bytes_in_integer

  call MPI_TYPE_CREATE_STRUCT(2,(/1,1/),displacements,&
       (/tmp_filetype1,tmp_filetype2/),filetype,code)
  call MPI_TYPE_COMMIT(filetype,code)

  [...]

end program read_view03_struct
```

8 – MPI-IO
8.8 – Nonblocking Data Access

Nonblocking Data Access

- Nonblocking operations enable overlapping of I/O operations and computations.
- The semantic of nonblocking I/O calls is similar to the semantic of nonblocking communications between processes.
- A first nonblocking I/O call initiates the I/O operation and a separate request call is needed to complete the I/O requests (`MPI_TEST()`, `MPI_WAIT()`, etc.).

8 – MPI-IO

8.8 – Nonblocking Data Access

8.8.1 – Data Access with Explicit Offsets

```
1  program iread_at
2    use mpi
3    implicit none
4
5    integer, parameter                    :: nb_values=10
6    integer                               :: i,nb_iterations=0,rank,bytes_in_integer, &
7                                              fh,request,code
8    integer(kind=MPI_OFFSET_KIND)          :: offset
9    integer, dimension(nb_values)         :: values
10   integer, dimension(MPI_STATUS_SIZE)  :: status
11   logical                               :: finish
12
13   call MPI_INIT(code)
14   call MPI_COMM_RANK(MPI_COMM_WORLD,rank,code)
```

```
15    call MPI_FILE_OPEN(MPI_COMM_WORLD,"data.dat",MPI_MODE_RDONLY,MPI_INFO_NULL, &
16                       fh,code)
17
18    call MPI_TYPE_SIZE(MPI_INTEGER,bytes_in_integer,code)
19
20    offset=rank*nb_values*bytes_in_integer
21    call MPI_FILE_IREAD_AT(fh,offset,values,nb_values, &
22                           MPI_INTEGER,requests,code)
23
24    do while (nb_iterations < 5000)
25       nb_iterations=nb_iterations+1
26       ! Overlapping the I/O operation with computations
27       ...
28       call MPI_TEST(request,finish,status,code)
29       if (finish) exit
30    end do
31    if (.not. finish) call MPI_WAIT(request,status,code)
32    print *,"After",nb_iterations,"iterations, read process",rank,":",values
33
34    call MPI_FILE_CLOSE(fh,code)
35    call MPI_FINALIZE(code)
36
37 end program iread_at
```

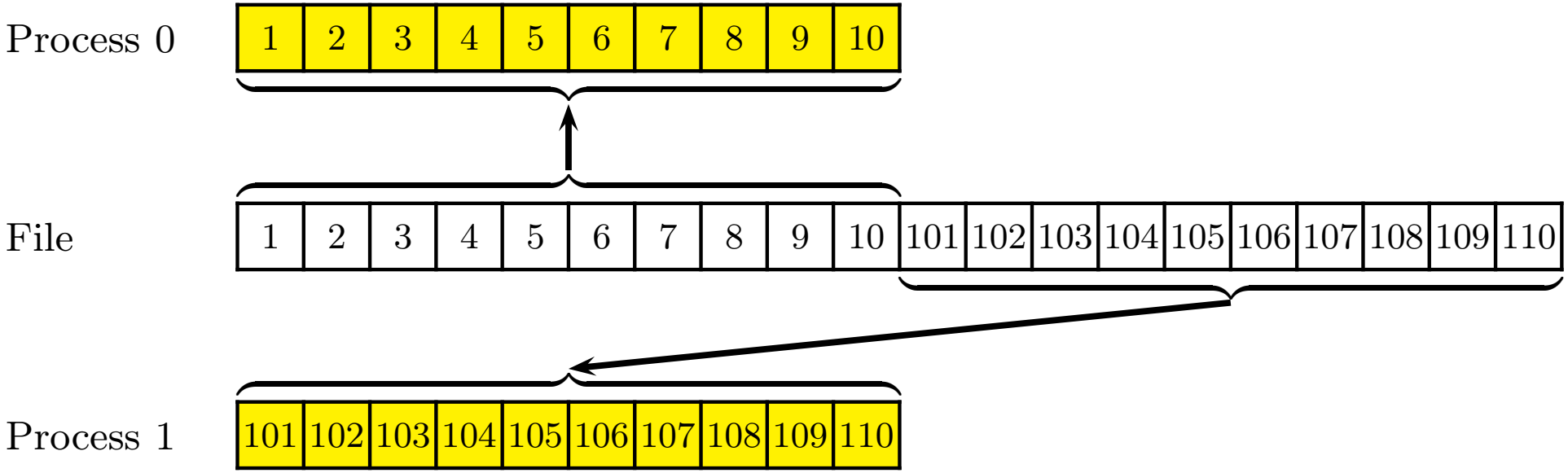

Figure 55 : Example of `MPI_FILE_IREAD_AT()`

```
> mpiexec -n 2 iread_at

After 1 iterations, read process 0 : 1, 2, 3, 4, 5, 6, 7, 8, 9, 10
After 1 iterations, read process 1 : 101, 102, 103, 104, 105, 106, 107, 108, 109, 110
```

8 – MPI-IO

8.8 – Nonblocking Data Access

8.8.2 – Data access with individual file pointers

```
program iread
  use mpi
  implicit none

  integer, parameter                    :: nb_values=10
  integer                               :: fh,request,code, nb_it
  integer, dimension(nb_values)         :: values,temps
  logical                               :: finished

  call MPI_INIT(code)
  ...
  call MPI_FILE_OPEN(MPI_COMM_WORLD,"data.dat",MPI_MODE_WRONLY+MPI_MODE_CREATE,
                     MPI_INFO_NULL, fh,code)
  temp = values
  call MPI_FILE_IWRITE(fh,temp,nb_values,MPI_INTEGER,request,code)
  do while (nb_it < 5000)
    nb_it = nb_it+1
    ...
    call MPI_TEST(request,finished,MPI_STATUS_IGNORE,code)
    if (finished) then
      temp = values
      call MPI_FILE_IWRITE(fh,temp,nb_values,MPI_INTEGER,request,code)
    end if
  end do
  if (.not. finished) call MPI_WAIT(request,MPI_STATUS_IGNORE,code)
  call MPI_FILE_CLOSE(fh,code)
  call MPI_FINALIZE(code)
end program iread
```

Split collective data access routines

- The split collective routines support a restricted form of nonblocking operations for collective data access.
- A single collective operation is split into two parts: a begin routine and an end routine.
- On any MPI process, each file handle can only have one active split collective operation at any time.
- Collective I/O operations are not permitted concurrently with a split collective access on the same file handle (but non-collective I/O are allowed). The buffer passed to a begin routine must not be used while the routine is outstanding.

```
program read_ordered_begin_end

  use mpi
  implicit none

  integer                                :: rank,fh,code
  integer, parameter                     :: nb_values=10
  integer, dimension(nb_values)          :: values
  integer, dimension(MPI_STATUS_SIZE) :: status

  call MPI_INIT(code)
  call MPI_COMM_RANK(MPI_COMM_WORLD,rank,code)

  call MPI_FILE_OPEN(MPI_COMM_WORLD,"data.dat",MPI_MODE_RDONLY,MPI_INFO_NULL, &
                     fh,code)

  call MPI_FILE_READ_ORDERED_BEGIN(fh,values,4,MPI_INTEGER,code)
  print *, "Process number    :",rank
  call MPI_FILE_READ_ORDERED_END(fh,values,status,code)

  print *, "Read process",rank,":",values(1:4)

  call MPI_FILE_CLOSE(fh,code)
  call MPI_FINALIZE(code)

end program read_ordered_begin_end
```

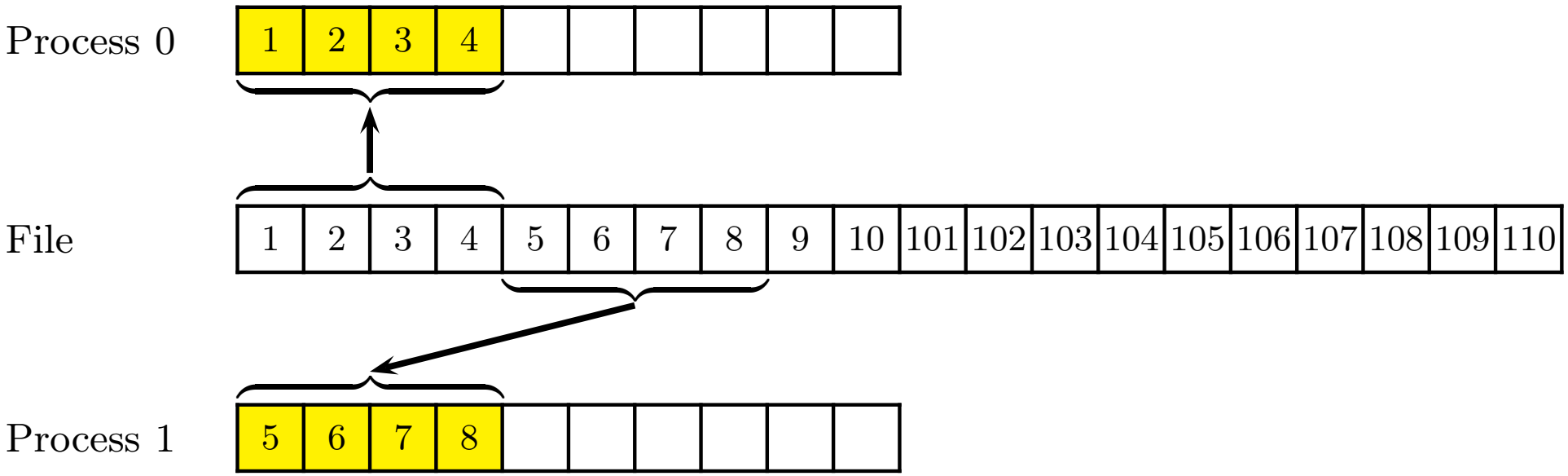

Figure 56 : Example of `MPI_FILE_READ_ORDERED_BEGIN()`

```
> mpiexec -n 2 read_ordered_begin_end

Process number    : 0
Read process 0 : 1, 2, 3, 4
Process number    : 1
Read process 1 : 5, 6, 7, 8
```

8 – MPI-IO
8.9 – Advice

Conclusion

MPI-IO provides a high-level I/O interface and a rich set of functionalities. Complex operations can be performed easily using an MPI-like interface and MPI librairies provide suitable optimisations. MPI-IO also achieves portability.

Advice

- Avoid subroutines with explicit positioning and prefer the use of shared or individual pointers as they provide a higher-level interface.
- Take advantage of collective I/O operations as they are generally more efficient.
- Use asynchronous I/O only after getting correct behaviour on a blocking version.

8 – MPI-IO
8.10 – Definitions

Definitions (files)

file : An MPI file is an ordered collection of typed data items. A file is opened collectively by a group of processes. All collective I/O calls on a file are collective over this group.

file handle : A file handle is an opaque object created by `MPI_FILE_OPEN()` and freed by `MPI_FILE_CLOSE()`. All operations on an open file reference the file through the file handle.

file pointer : A file pointer is an implicit offset maintained by MPI.

offset : An offset is a position in the file relative to the current view, expressed as a count of etypes. Holes in the view's filetype are skipped when calculating this position.

Definitions (views)

displacement : A file displacement is an absolute byte position relative to the beginning of a file. The displacement defines the location where a view begins.

etype : An etype (elementary datatype) is the unit of data access and positioning. It can be any MPI predefined or derived datatype. Data access is performed in etype units, reading or writing whole data items of type etype. Offsets are expressed as a count of etypes.

filetype : A filetype is the basis for partitioning a file among processes and defines a template for accessing the file. A filetype is either a single etype or a derived MPI datatype constructed from multiple instances of the same etype. In addition, the extent of any hole in the filetype must be a multiple of the etype's extent.

view : A view defines the current set of data visible and accessible from an open file as an ordered set of etypes.

9 – MPI 3.x

Extension

- Nonblocking collectives communications
- Neighborhood collective communications
- Fortran 2008 binding
- End of C++ bindings
- One-sided communication extension

9 – MPI 3.x

Nonblocking collectives

- Nonblocking version of collective communications
- With an I (immediate) before : MPI_IREDUCE(), MPI_IBCAST(), ...
- Wait with MPI_WAIT(), MPI_TEST() calls and all their variants
- No match between blocking and nonblocking
- The *status* argument retrieved by MPI_WAIT() has an undefined value for MPI_SOURCE and MPI_TAG
- For a given communicator, the call order must be the same

```
MPI_IBARRIER(comm, request, ierror)

INTEGER :: comm, request, ierror
```

9 – MPI 3.x

Neighborhood collective communications

- MPI_NEIGHBOR_ALLGATHER() and the V variation, MPI_NEIGHBOR_ALLTOALL() and the V and W variations
- Plus the nonblocking versions

```
call MPI_NEIGHBOR_ALLGATHER(u,1,MPI_INTEGER,&
                            v,1,MPI_INTEGER,comm2d,code)
```

9 – MPI 3.x

mpi_f08 module

- Usable with the module mpi_f08
- With this module, the last argument (*code*) is *optional*
- MPI objects have a specific type and are no longer INTEGER

For example, for MPI_RECV() the interface with the classic module is :

```
<type> buf(*)
INTEGER :: count, datatype, source, tag, comm, ierror
INTEGER, DIMENSION(MPI_STATUS_SIZE) :: status
```

With the mpi_f08 module :

```
TYPE(*), DIMENSION(..) :: buf
INTEGER                :: count, source, tag
TYPE(MPI_DATATYPE)     :: datatype
TYPE(MPI_COMM)         :: comm
TYPE(MPI_STATUS)       :: status
INTEGER, optional      :: ierror
```

mpi_f08 module

These new types are in fact INTEGER

```
TYPE, BIND(C) :: MPI_COMM
  INTEGER :: MPI_VAL
END TYPE MPI_COMM
```

falcutative functionalities in mpi_f08

- If `MPI_ASYNC_PROTECTS_NONBLOCKING` is set to *true*, the send and/or receive arguments are *asynchronous* in nonblocking interfaces.
- If `MPI_SUBARRAYS_SUPPORTED` is set to *true*, it's possible to use Fortran subarrays in nonblocking calls.

Removal of C++ binding

Replace by either the C binding or *Boost.MPI*

One-sided communication extension

- New operation MPI_GET_ACCUMULATE()
- New operation MPI_FETCH_AND_OP(): an MPI_GET_ACCUMULATE() which works with only one element
- And the new operation MPI_COMPARE_AND_SWAP()
- New function MPI_WIN_ALLOCATE() for allocating and creating the window in one call
- New function MPI_WIN_ALLOCATE_SHARED() for creating the window in shared memory

```
call MPI_COMM_SPLIT_TYPE(MPI_COMM_WORLD,MPI_COMM_TYPE_SHARED,key,MPI_INFO_NULL,commnode)
call MPI_WIN_ALLOCATE_SHARED(size,displacemnt,MPI_INFO_NULL,commnode,ptr,win)
call MPI_WIN_SHARED_QUERY(win,rank,distantsize,disp,distantptr)
```

MPI 3.1

- New functions `MPI_AINT_ADD()` and `MPI_AINT_DIFF()` for manipulating addresses
- New functions `MPI_FILE_IWRITE_AT_ALL()` `MPI_FILE_IREAD_AT_ALL()` `MPI_FILE_IREAD_ALL()` and `MPI_FILE_IWRITE_ALL()`

10 – Conclusion

Conclusion

- Use blocking point-to-point communications before going to nonblocking communications. It will then be necessary to try to overlap computations and communications.
- Use the blocking I/O functions before going to nonblocking I/O. Similarly, it will then be necessary to overlap I/O-computations.
- Write the communications as if the sends were synchronous (`MPI_SSEND()`).
- Avoid the synchronization barriers (`MPI_BARRIER()`), especially on the blocking collective functions.
- MPI/OpenMP hybrid programming can bring gains of scalability. However, in order for this approach to function well, it is obviously necessary to have good OpenMP performance inside each MPI process. A hybrid course is given at IDRIS (`https://cours.idris.fr/`).