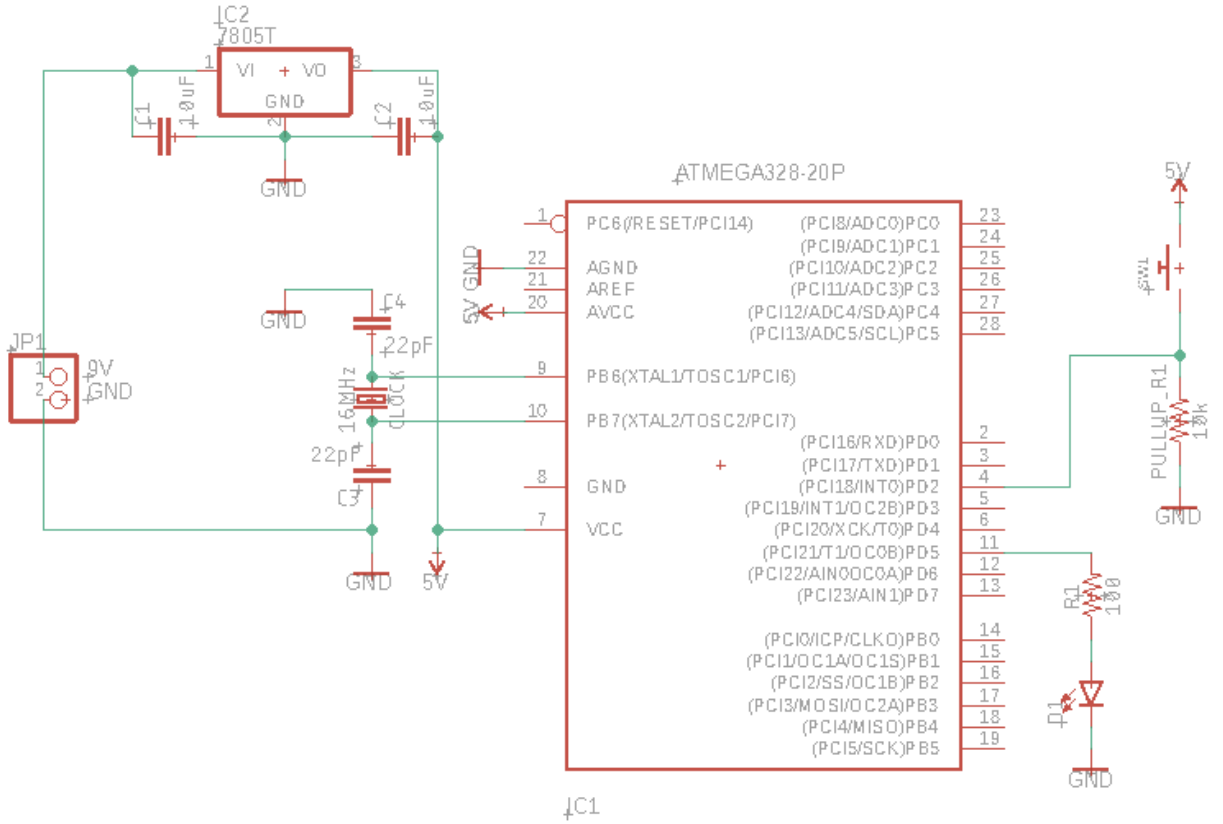
IC2
7805T
VI
VO
GND
C1
10uF
C2
10uF
GND
ATMEGA328-20P
PC6(/RESET/PCI14)
(PCI8/ADC0)PC0
(PCI9/ADC1)PC1
AGND
AREF
AVCC
(PCI10/ADC2)PC2
(PCI11/ADC3)PC3
(PCI12/ADC4/SDA)PC4
(PCI13/ADC5/SCL)PC5
PB6(XTAL1/TOSC1/PCI6)
PB7(XTAL2/TOSC2/PCI7)
(PCI16/RXD)PD0
(PCI17/TXD)PD1
GND
(PCI18/INT0)PD2
(PCI19/INT1/OC2B)PD3
VCC
(PCI20/XCK/T0)PD4
(PCI21/T1/OC0B)PD5
(PCI22/AIN0/OC0A)PD6
(PCI23/AIN1)PD7
(PCI0/ICP/CLKO)PB0
(PCI1/OC1A/OC1S)PB1
(PCI2/SS/OC1B)PB2
(PCI3/MOSI/OC2A)PB3
(PCI4/MISO)PB4
(PCI5/SCK)PB5
IC1
JP1
9V
GND
C4
22pF
16MHz
CLOCK
22pF
C3
GND
5V
5V
GND
SW1
PULLUP_R1
10k
GND
R1
100
D1
GND

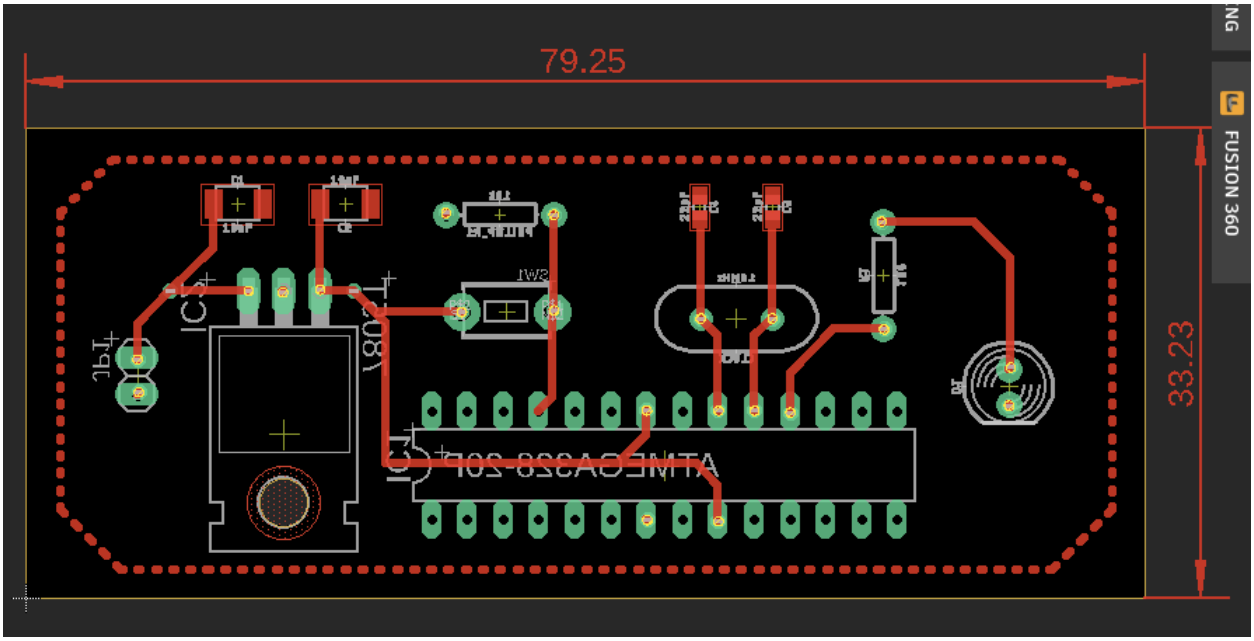
79.25
33.23
FUSION 360