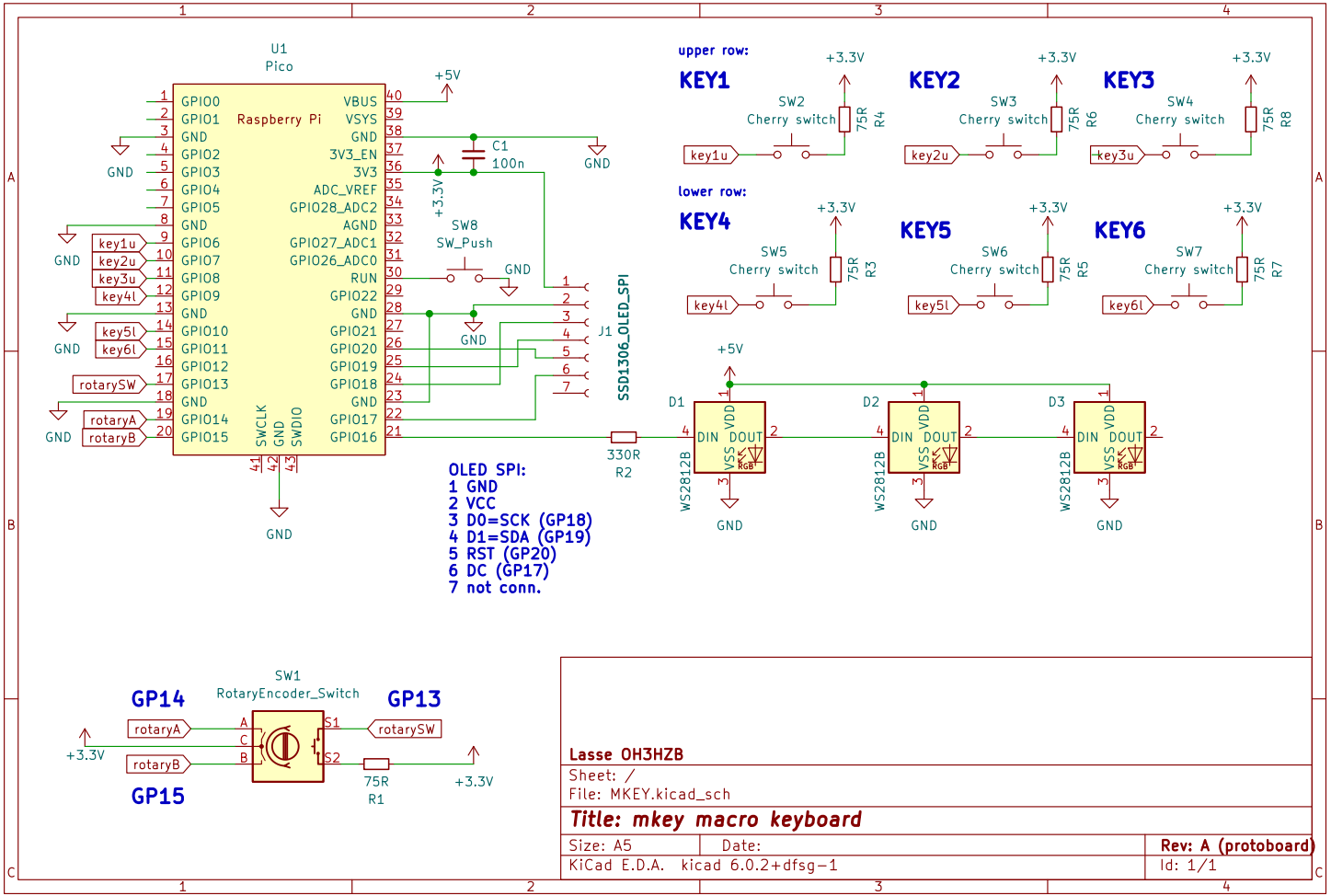

Lasse OH3HZB

Sheet: /

File: MKEY.kicad_sch

Title: mkey macro keyboard

Size: A5	Date:	Rev: A (protoboard)
KiCad E.D.A. kicad 6.0.2+dfsg-1		Id: 1/1