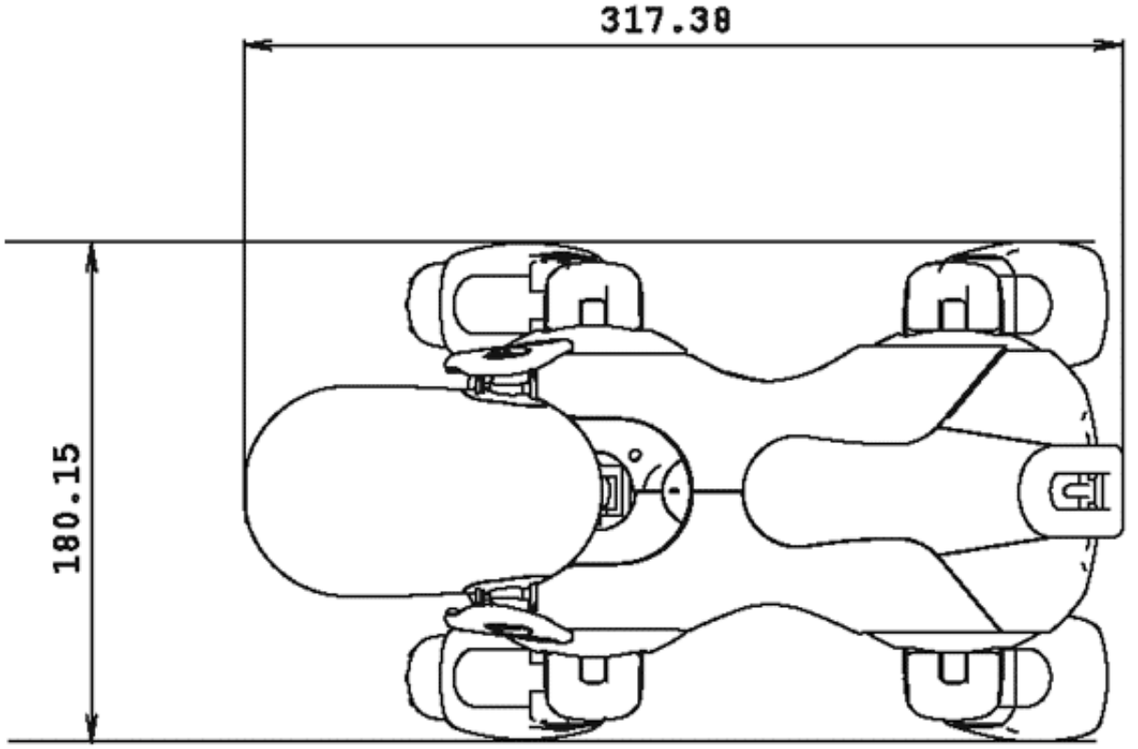

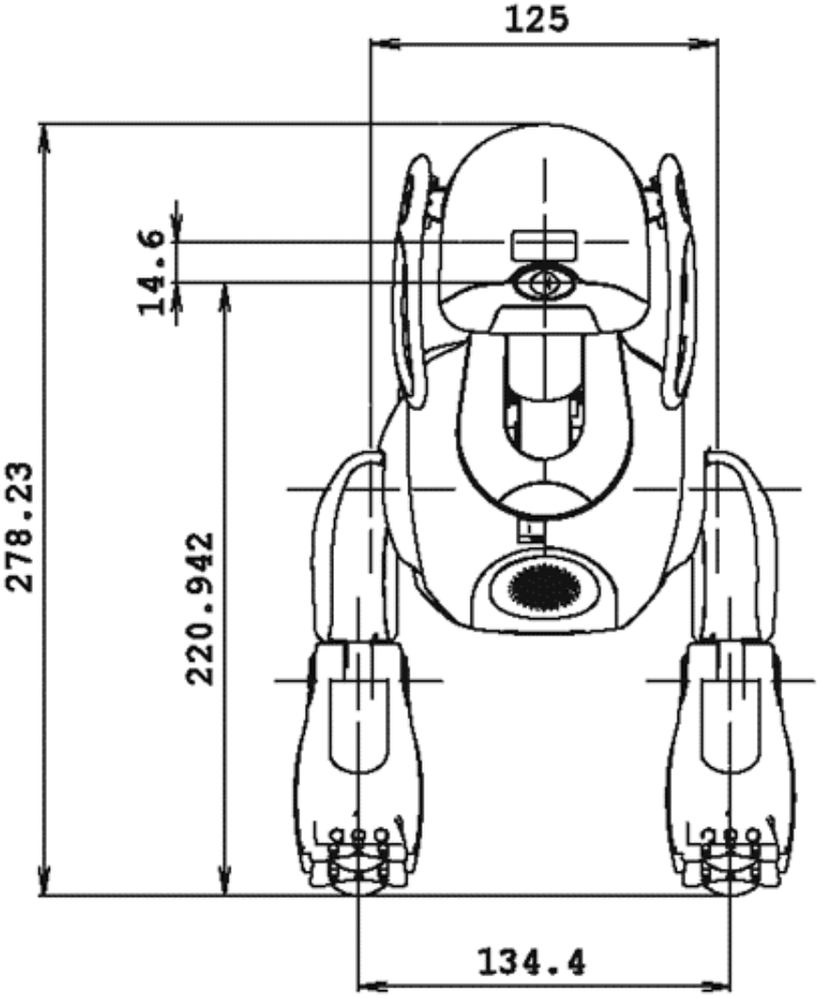

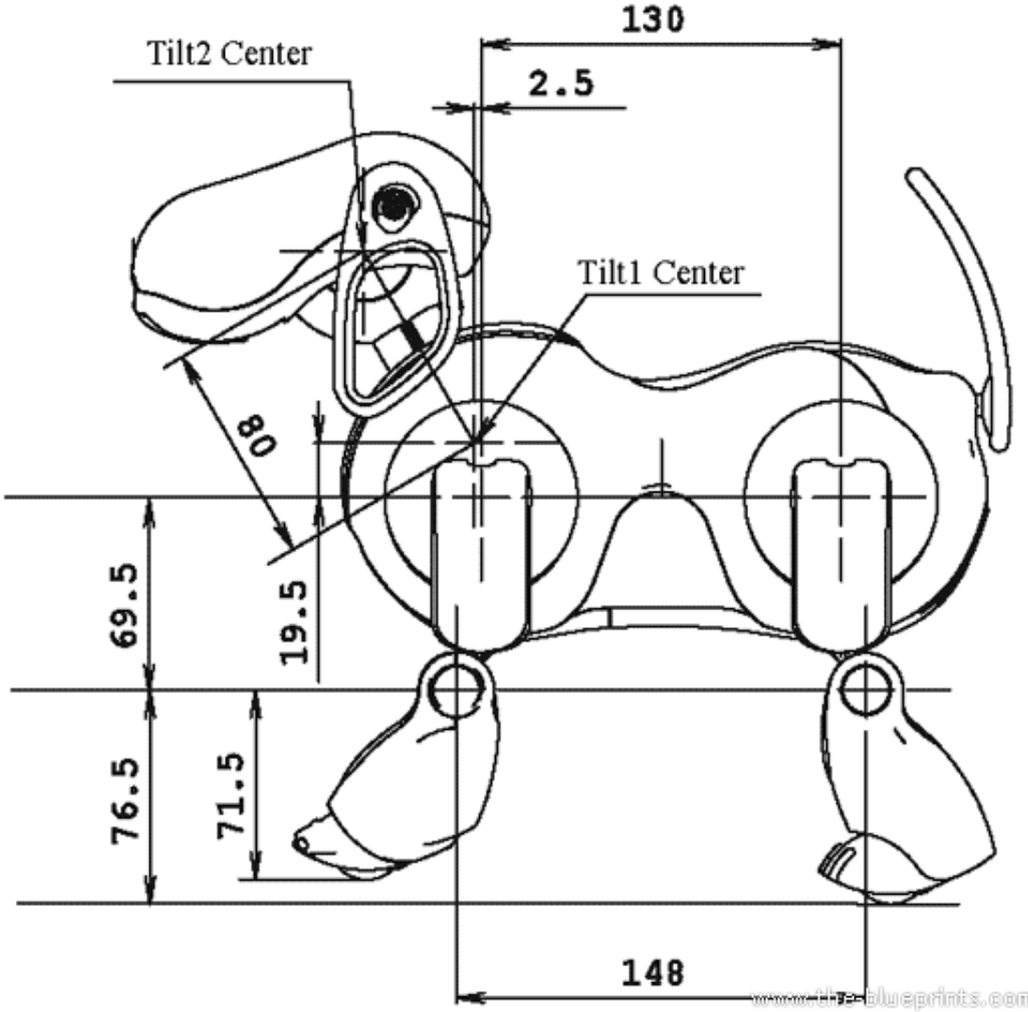

www.the-blueprints.com