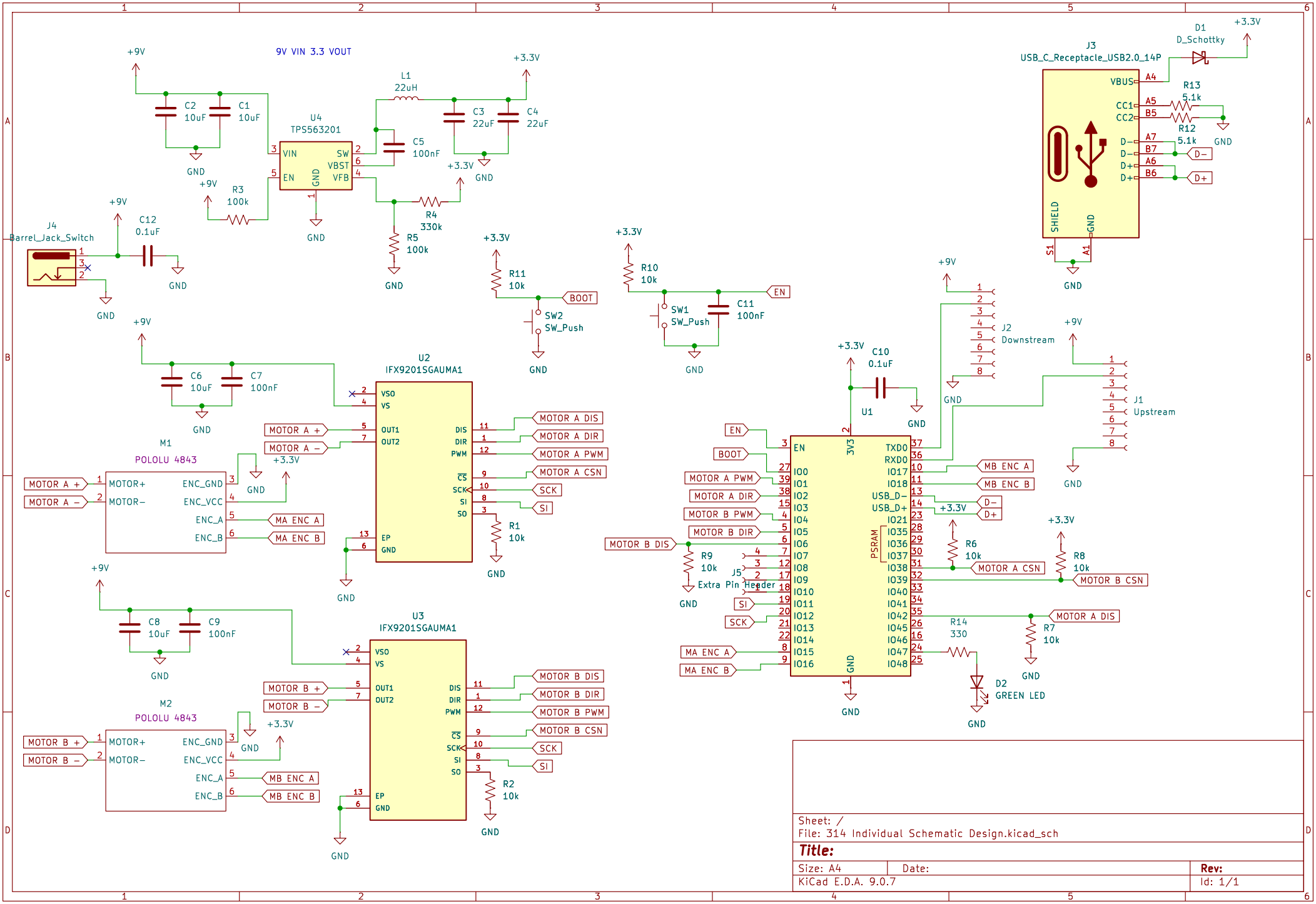

Sheet: /
File: 314 Individual Schematic Design.kicad_sch

Title:

Size: A4	Date:	Rev:
KiCad E.D.A. 9.0.7		Id: 1/1