class14: RNA-Seq Analysis Mini Project

Leah Johnson, PID: A17394690

Table of contents

Background . . . 1
Data Import . . . 1
Check and tidy . . . 2
Remove zero count genes . . . 3
Setup for DESeq . . . 4
Run DESeq . . . 4
Get results . . . 4

Results **4**
Volcano plot . . . 5
Add Annotation . . . 6
Adding gene annotation . . . 7
Save Annotated Results . . . 9
KEGG Pathway Analysis . . . 9
Gene Ontology . . . 22
Reactome Analysis . . . 24

Background

Data Import

```
library(BiocManager)
library(DESeq2)
```

```
metaFile <- "GSE37704_metadata.csv"
countFile <- "GSE37704_featurecounts.csv"
```

```r
# Import metadata
colData <- read.csv(metaFile, row.names=1)
head(colData)
```

```
              condition
SRR493366 control_sirna
SRR493367 control_sirna
SRR493368 control_sirna
SRR493369      hoxa1_kd
SRR493370      hoxa1_kd
SRR493371      hoxa1_kd
```

```r
# Import countdata
countData = read.csv(countFile, row.names=1)
head(countData)
```

```
                length SRR493366 SRR493367 SRR493368 SRR493369 SRR493370
ENSG00000186092    918         0         0         0         0         0
ENSG00000279928    718         0         0         0         0         0
ENSG00000279457   1982        23        28        29        29        28
ENSG00000278566    939         0         0         0         0         0
ENSG00000273547    939         0         0         0         0         0
ENSG00000187634   3214       124       123       205       207       212
                SRR493371
ENSG00000186092         0
ENSG00000279928         0
ENSG00000279457        46
ENSG00000278566         0
ENSG00000273547         0
ENSG00000187634       258
```

Check and tidy

Q. Complete the code below to remove the troublesome first column from countData

```r
head(countData)
```

```
                length SRR493366 SRR493367 SRR493368 SRR493369 SRR493370
ENSG00000186092    918         0         0         0         0         0
ENSG00000279928    718         0         0         0         0         0
```

```
ENSG00000279457   1982        23        28        29        29        28
ENSG00000278566    939         0         0         0         0         0
ENSG00000273547    939         0         0         0         0         0
ENSG00000187634   3214       124       123       205       207       212
                SRR493371
ENSG00000186092         0
ENSG00000279928         0
ENSG00000279457        46
ENSG00000278566         0
ENSG00000273547         0
ENSG00000187634       258
```

We need to remove the first "length" column from 'countData' to have a 1:1 correspondence with 'colData' rows.

```
countData <- countData[,-1]
```

```
rownames(colData) == colnames(countData)
```

```
[1] TRUE TRUE TRUE TRUE TRUE TRUE
```

Remove zero count genes

> Q. Complete the code below to filter countData to exclude genes (i.e. rows) where we have 0 read count across all samples (i.e. columns).

```
to.keep <- rowSums(countData) > 0
countData <- countData[to.keep, ]
head(countData)
```

```
                SRR493366 SRR493367 SRR493368 SRR493369 SRR493370 SRR493371
ENSG00000279457        23        28        29        29        28        46
ENSG00000187634       124       123       205       207       212       258
ENSG00000188976      1637      1831      2383      1226      1326      1504
ENSG00000187961       120       153       180       236       255       357
ENSG00000187583        24        48        65        44        48        64
ENSG00000187642         4         9        16        14        16        16
```

Setup for DESeq

```
library(DESeq2)
```

```
dds <-  DESeqDataSetFromMatrix(countData = countData,
                               colData = colData,
                               design= ~condition)
```

```
Warning in DESeqDataSet(se, design = design, ignoreRank): some variables in
design formula are characters, converting to factors
```

Run DESeq

```
dds = DESeq(dds)
```

```
dds
```

```
class: DESeqDataSet
dim: 15975 6
metadata(1): version
assays(4): counts mu H cooks
rownames(15975): ENSG00000279457 ENSG00000187634 ... ENSG00000276345
  ENSG00000271254
rowData names(22): baseMean baseVar ... deviance maxCooks
colnames(6): SRR493366 SRR493367 ... SRR493370 SRR493371
colData names(2): condition sizeFactor
```

Get results

```
res <- results(dds)
```

Results

```r
summary(res)
```

```
out of 15975 with nonzero total read count
adjusted p-value < 0.1
LFC > 0 (up)       : 4349, 27%
LFC < 0 (down)     : 4396, 28%
outliers [1]       : 0, 0%
low counts [2]     : 1237, 7.7%
(mean count < 0)
[1] see 'cooksCutoff' argument of ?results
[2] see 'independentFiltering' argument of ?results
```

Volcano plot

```r
library(ggplot2)
```

```r
ggplot(res) +
  aes(log2FoldChange,
      -log(padj)) +
  geom_point()
```

```
Warning: Removed 1237 rows containing missing values or values outside the scale range
(`geom_point()`).
```

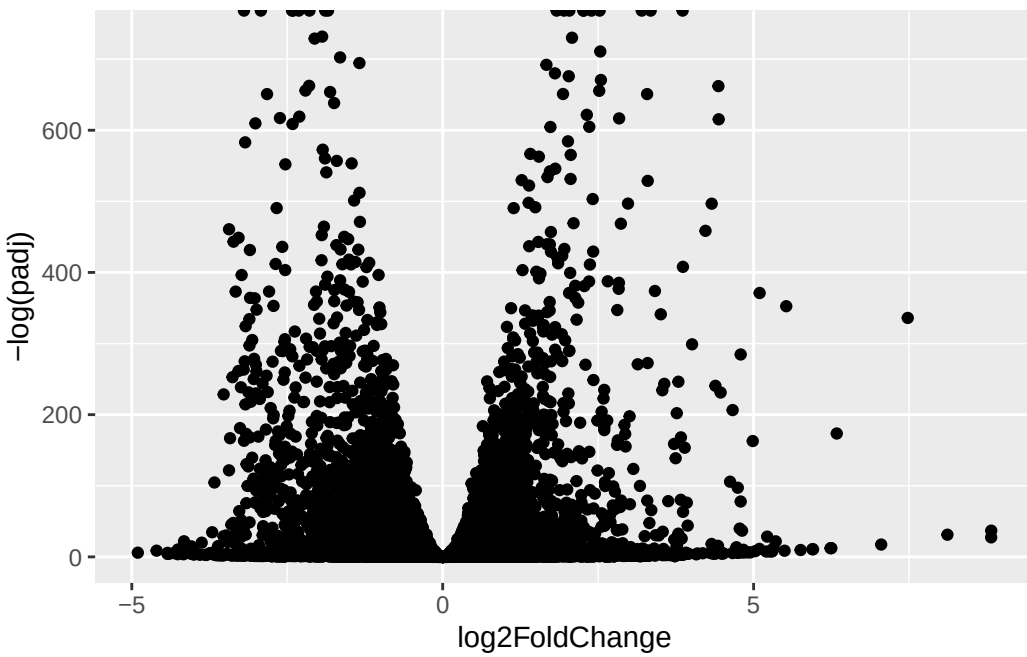

Add Annotation

Q. Improve this plot by completing the below code, which adds color, axis labels and cutoff lines:

```
mycols <- rep("gray", nrow(res))
mycols[abs(res$log2FoldChange) > 2] <- "blue"
mycols[res$padj > 0.01] <- "gray"

ggplot(res) +
  aes(log2FoldChange,
      -log(padj)) +
  geom_point(col=mycols) +
  xlab("Log2(FoldChange)") +
  ylab("-Log(P-value)") +
  geom_vline(xintercept = c(-2,2)) +
  geom_hline(yintercept = -log(0.01))
```

```
Warning: Removed 1237 rows containing missing values or values outside the scale range
(`geom_point()`).
```

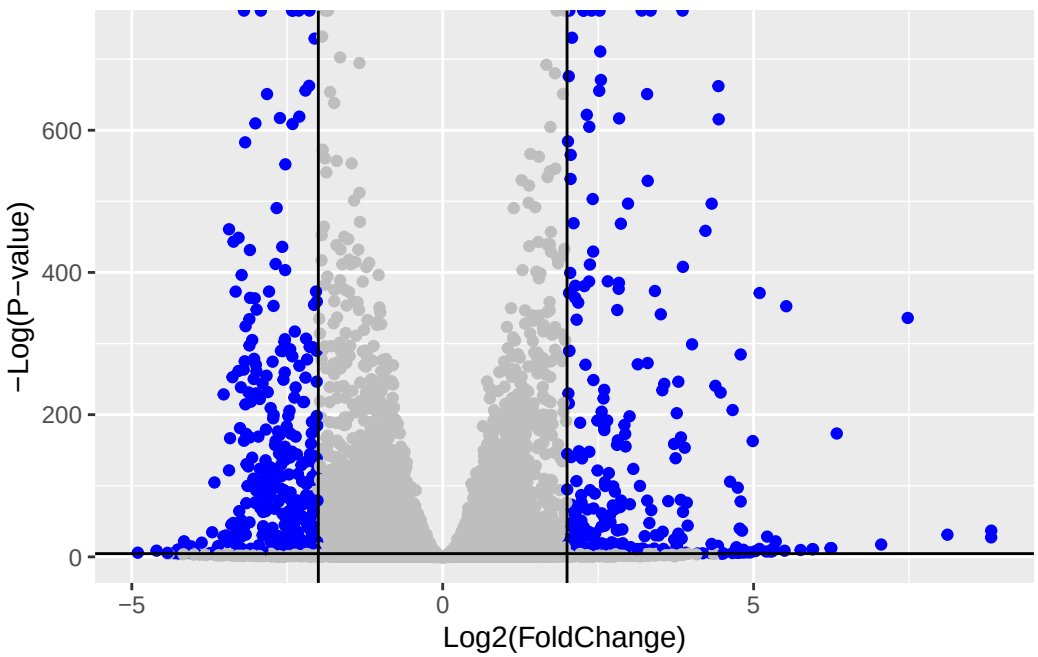

Adding gene annotation

```
library("AnnotationDbi")
library("org.Hs.eg.db")
```

```
columns(org.Hs.eg.db)
```

```
 [1] "ACCNUM"       "ALIAS"        "ENSEMBL"      "ENSEMBLPROT"  "ENSEMBLTRANS"
 [6] "ENTREZID"     "ENZYME"       "EVIDENCE"     "EVIDENCEALL"  "GENENAME"
[11] "GENETYPE"     "GO"           "GOALL"        "IPI"          "MAP"
[16] "OMIM"         "ONTOLOGY"     "ONTOLOGYALL"  "PATH"         "PFAM"
[21] "PMID"         "PROSITE"      "REFSEQ"       "SYMBOL"       "UCSCKG"
[26] "UNIPROT"
```

```
res$symbol = mapIds(org.Hs.eg.db,
                    keys=row.names(res),
                    keytype="ENSEMBL",
```

```
                     column="SYMBOL",
                     multiVals="first")
```

```
'select()' returned 1:many mapping between keys and columns
```

```
res$entrez = mapIds(org.Hs.eg.db,
                     keys=row.names(res),
                     keytype="ENSEMBL",
                     column="ENTREZID",
                     multiVals="first")
```

```
'select()' returned 1:many mapping between keys and columns
```

```
res$name =   mapIds(org.Hs.eg.db,
                     keys=row.names(res),
                     keytype="ENSEMBL",
                     column="GENENAME",
                     multiVals="first")
```

```
'select()' returned 1:many mapping between keys and columns
```

```
head(res, 10)
```

```
log2 fold change (MLE): condition hoxa1 kd vs control sirna
Wald test p-value: condition hoxa1 kd vs control sirna
DataFrame with 10 rows and 9 columns
                   baseMean log2FoldChange     lfcSE       stat      pvalue
                  <numeric>      <numeric> <numeric>  <numeric>   <numeric>
ENSG00000279457   29.913579      0.1792571 0.3248216   0.551863 5.81042e-01
ENSG00000187634  183.229650      0.4264571 0.1402658   3.040350 2.36304e-03
ENSG00000188976 1651.188076     -0.6927205 0.0548465 -12.630158 1.43990e-36
ENSG00000187961  209.637938      0.7297556 0.1318599   5.534326 3.12428e-08
ENSG00000187583   47.255123      0.0405765 0.2718928   0.149237 8.81366e-01
ENSG00000187642   11.979750      0.5428105 0.5215598   1.040744 2.97994e-01
ENSG00000188290  108.922128      2.0570638 0.1969053  10.446970 1.51282e-25
ENSG00000187608  350.716868      0.2573837 0.1027266   2.505522 1.22271e-02
ENSG00000188157 9128.439422      0.3899088 0.0467163   8.346304 7.04321e-17
ENSG00000237330    0.158192      0.7859552 4.0804729   0.192614 8.47261e-01
                       padj      symbol      entrez                   name
```

```
                  <numeric> <character> <character>            <character>
ENSG00000279457 6.86555e-01          NA          NA                     NA
ENSG00000187634 5.15718e-03      SAMD11      148398 sterile alpha motif ..
ENSG00000188976 1.76549e-35       NOC2L       26155 NOC2 like nucleolar ..
ENSG00000187961 1.13413e-07      KLHL17      339451 kelch like family me..
ENSG00000187583 9.19031e-01     PLEKHN1       84069 pleckstrin homology ..
ENSG00000187642 4.03379e-01       PERM1       84808 PPARGC1 and ESRR ind..
ENSG00000188290 1.30538e-24        HES4       57801 hes family bHLH tran..
ENSG00000187608 2.37452e-02       ISG15        9636 ISG15 ubiquitin like..
ENSG00000188157 4.21963e-16        AGRN      375790                   agrin
ENSG00000237330          NA      RNF223      401934 ring finger protein ..
```

Save Annotated Results

> Q. Finally for this section let's reorder these results by adjusted p-value and save them to a CSV file in your current project directory.

```
res = res[order(res$pvalue),]
write.csv(res, file = "deseq_results.csv")
```

KEGG Pathway Analysis

```
library(pathview)
library(gage)
library(gageData)
```

```
data(kegg.sets.hs)
data(sigmet.idx.hs)
```

```
# Focus on signaling and metabolic pathways only
kegg.sets.hs = kegg.sets.hs[sigmet.idx.hs]

# Examine the first 3 pathways
head(kegg.sets.hs, 3)
```

```
$`hsa00232 Caffeine metabolism`
[1] "10"   "1544" "1548" "1549" "1553" "7498" "9"

$`hsa00983 Drug metabolism - other enzymes`
```

```
 [1] "10"     "1066"   "10720"  "10941"  "151531" "1548"   "1549"   "1551"
 [9] "1553"   "1576"   "1577"   "1806"   "1807"   "1890"   "221223" "2990"
[17] "3251"   "3614"   "3615"   "3704"   "51733"  "54490"  "54575"  "54576"
[25] "54577"  "54578"  "54579"  "54600"  "54657"  "54658"  "54659"  "54963"
[33] "574537" "64816"  "7083"   "7084"   "7172"   "7363"   "7364"   "7365"
[41] "7366"   "7367"   "7371"   "7372"   "7378"   "7498"   "79799"  "83549"
[49] "8824"   "8833"   "9"      "978"

$`hsa00230 Purine metabolism`
  [1] "100"    "10201"  "10606"  "10621"  "10622"  "10623"  "107"    "10714"
  [9] "108"    "10846"  "109"    "111"    "11128"  "11164"  "112"    "113"
 [17] "114"    "115"    "122481" "122622" "124583" "132"    "158"    "159"
 [25] "1633"   "171568" "1716"   "196883" "203"    "204"    "205"    "221823"
 [33] "2272"   "22978"  "23649"  "246721" "25885"  "2618"   "26289"  "270"
 [41] "271"    "27115"  "272"    "2766"   "2977"   "2982"   "2983"   "2984"
 [49] "2986"   "2987"   "29922"  "3000"   "30833"  "30834"  "318"    "3251"
 [57] "353"    "3614"   "3615"   "3704"   "377841" "471"    "4830"   "4831"
 [65] "4832"   "4833"   "4860"   "4881"   "4882"   "4907"   "50484"  "50940"
 [73] "51082"  "51251"  "51292"  "5136"   "5137"   "5138"   "5139"   "5140"
 [81] "5141"   "5142"   "5143"   "5144"   "5145"   "5146"   "5147"   "5148"
 [89] "5149"   "5150"   "5151"   "5152"   "5153"   "5158"   "5167"   "5169"
 [97] "51728"  "5198"   "5236"   "5313"   "5315"   "53343"  "54107"  "5422"
[105] "5424"   "5425"   "5426"   "5427"   "5430"   "5431"   "5432"   "5433"
[113] "5434"   "5435"   "5436"   "5437"   "5438"   "5439"   "5440"   "5441"
[121] "5471"   "548644" "55276"  "5557"   "5558"   "55703"  "55811"  "55821"
[129] "5631"   "5634"   "56655"  "56953"  "56985"  "57804"  "58497"  "6240"
[137] "6241"   "64425"  "646625" "654364" "661"    "7498"   "8382"   "84172"
[145] "84265"  "84284"  "84618"  "8622"   "8654"   "87178"  "8833"   "9060"
[153] "9061"   "93034"  "953"    "9533"   "954"    "955"    "956"    "957"
[161] "9583"   "9615"
```

```
foldchanges = res$log2FoldChange
names(foldchanges) = res$entrez
head(foldchanges)
```

```
     1266     54855      1465      2034      2150      6659
-2.422719  3.201955 -2.313738 -1.888019  3.344508  2.392288
```

```
# Get the results
keggres = gage(foldchanges, gsets=kegg.sets.hs)
```

Look at the object returned from 'gage()':

```r
attributes(keggres)
```

```
$names
[1] "greater" "less"    "stats"
```

```r
# Look at the first few down (less) pathways
head(keggres$less)
```

```
                                        p.geomean stat.mean        p.val
hsa04110 Cell cycle                    8.995727e-06 -4.378644 8.995727e-06
hsa03030 DNA replication               9.424076e-05 -3.951803 9.424076e-05
hsa03013 RNA transport                 1.375901e-03 -3.028500 1.375901e-03
hsa03440 Homologous recombination      3.066756e-03 -2.852899 3.066756e-03
hsa04114 Oocyte meiosis                3.784520e-03 -2.698128 3.784520e-03
hsa00010 Glycolysis / Gluconeogenesis 8.961413e-03 -2.405398 8.961413e-03
                                            q.val set.size         exp1
hsa04110 Cell cycle                    0.001448312      121 8.995727e-06
hsa03030 DNA replication               0.007586381       36 9.424076e-05
hsa03013 RNA transport                 0.073840037      144 1.375901e-03
hsa03440 Homologous recombination      0.121861535       28 3.066756e-03
hsa04114 Oocyte meiosis                0.121861535      102 3.784520e-03
hsa00010 Glycolysis / Gluconeogenesis 0.212222694       53 8.961413e-03
```

Add the Cell Cycle id:

```r
pathview(gene.data=foldchanges, pathway.id="hsa04110")
```

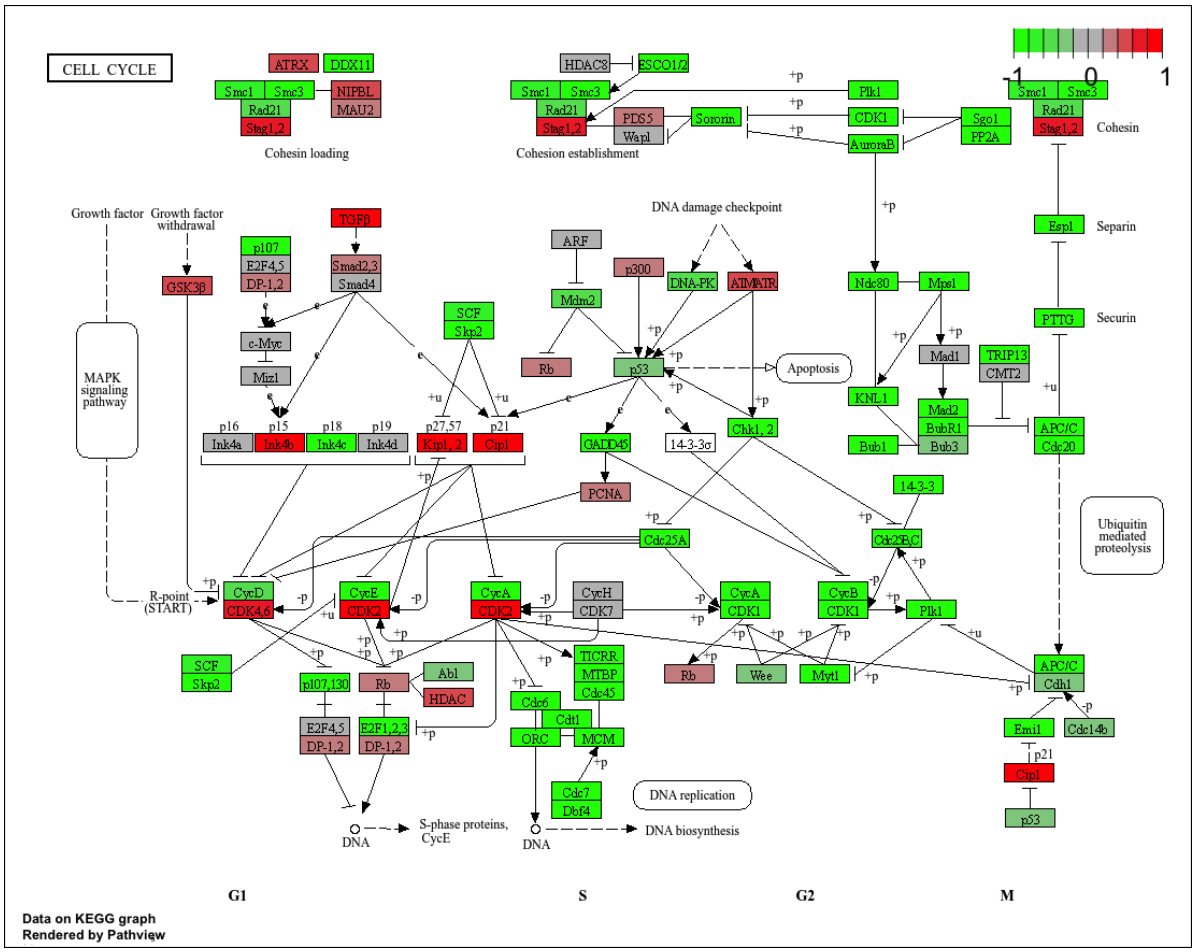


```
# A different PDF based output of the same data
pathview(gene.data=foldchanges, pathway.id="hsa04110", kegg.native=FALSE)
```

```
'select()' returned 1:1 mapping between keys and columns

Warning: reconcile groups sharing member nodes!

     [,1] [,2]
[1,] "9"  "300"
[2,] "9"  "306"

Info: Working in directory /Users/leahjohnson/Desktop/BIMM 143/class14

Info: Writing image file hsa04110.pathview.pdf
```

Let's obtain the top 5 upregulated pathways:

```
# Focus on top 5 upregulated pathways here for demo purposes only
keggrespathways <- rownames(keggres$greater)[1:5]

# Extract the 8 character long IDs part of each string
keggresids <- substr(keggrespathways, start=1, stop=8)
keggresids
```

```
[1] "hsa04640" "hsa04630" "hsa00140" "hsa04142" "hsa04330"
```

```
pathview(gene.data=foldchanges, pathway.id=keggresids, species="hsa")
```

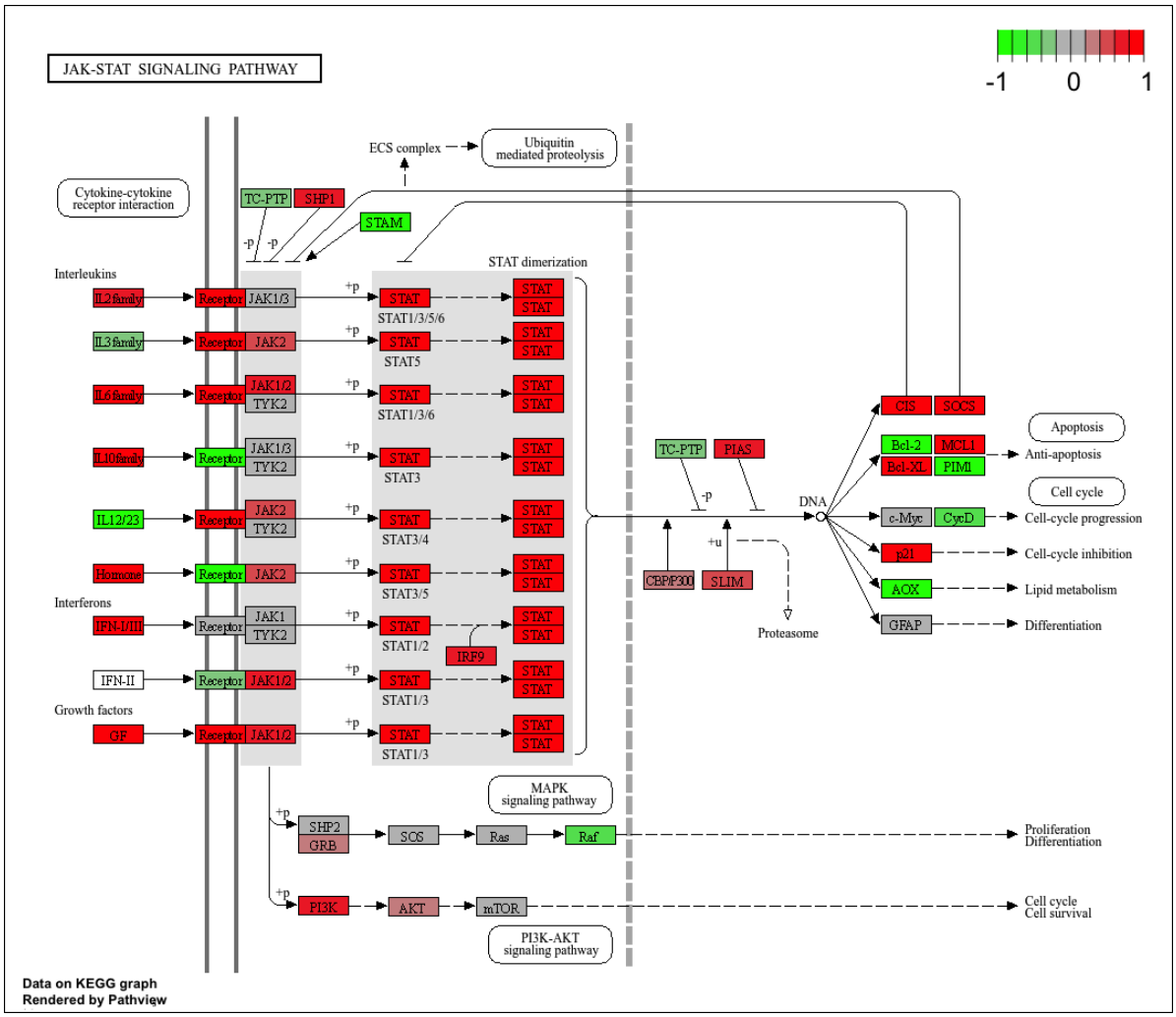

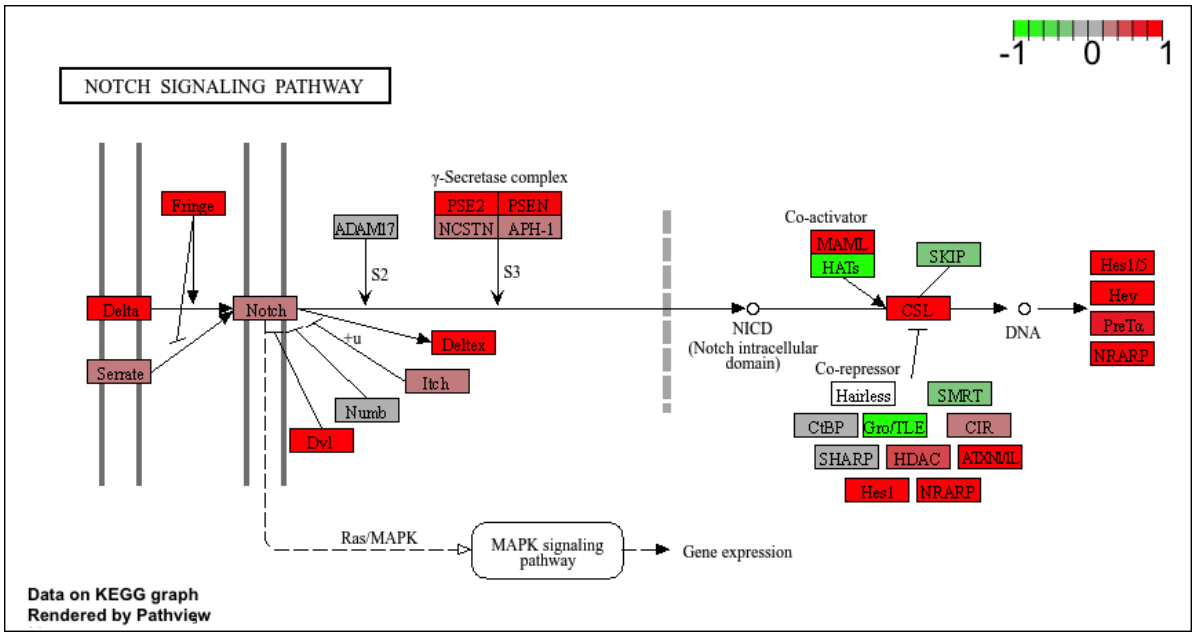
-1
0
1
NOTCH SIGNALING PATHWAY
γ-Secretase complex
PSE2
PSEN
NCSTN
APH-1
Fringe
ADAM17
S2
S3
Co-activator
MAML
HATs
SKIP
Hes1/5
Hey
PreTα
NRARP
Delta
Notch
Serrate
+u
Deltex
Itch
Numb
Dvl
NICD
(Notch intracellular domain)
CSL
DNA
Co-repressor
Hairless
SMRT
CtBP
Gro/TLE
CIR
SHARP
HDAC
ATXN1L
Hes1
NRARP
Ras/MAPK
MAPK signaling pathway
Gene expression
Data on KEGG graph
Rendered by Pathview

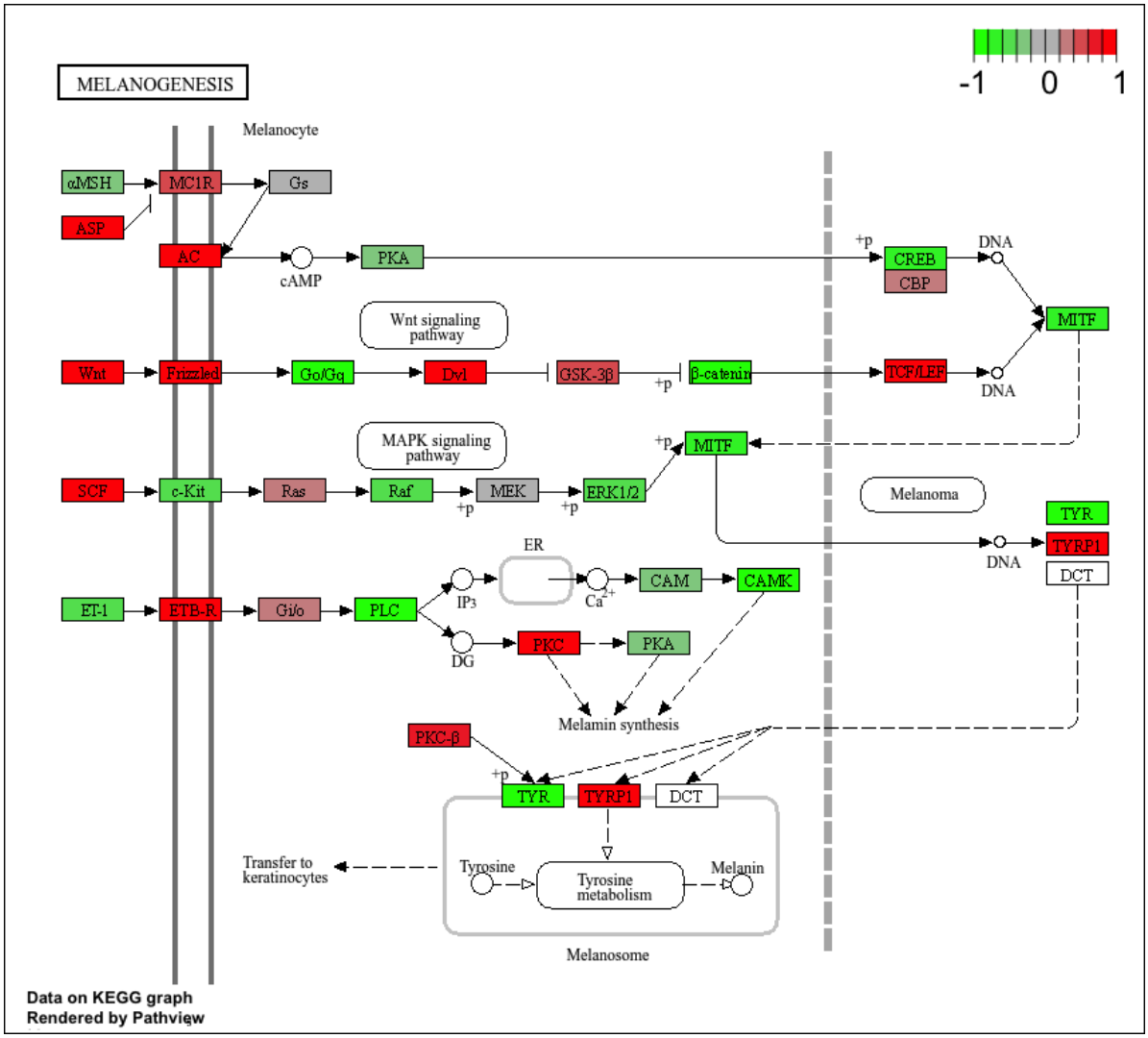
MELANOGENESIS
-1
0
1
Melanocyte
αMSH
MC1R
Gs
ASP
AC
cAMP
PKA
+p
CREB
CBP
DNA
MITF
Wnt signaling pathway
Wnt
Frizzled
Go/Gq
Dvl
GSK-3β
+p
β-catenin
TCF/LEF
DNA
MAPK signaling pathway
+p
MITF
SCF
c-Kit
Ras
Raf
+p
MEK
+p
ERK1/2
Melanoma
TYR
TYRP1
DCT
DNA
ER
ET-1
ETB-R
Gi/o
PLC
IP3
Ca2+
CAM
CAMK
DG
PKC
PKA
Melamin synthesis
PKC-β
+p
TYR
TYRP1
DCT
Transfer to keratinocytes
Tyrosine
Tyrosine metabolism
Melanin
Melanosome
Data on KEGG graph
Rendered by Pathview

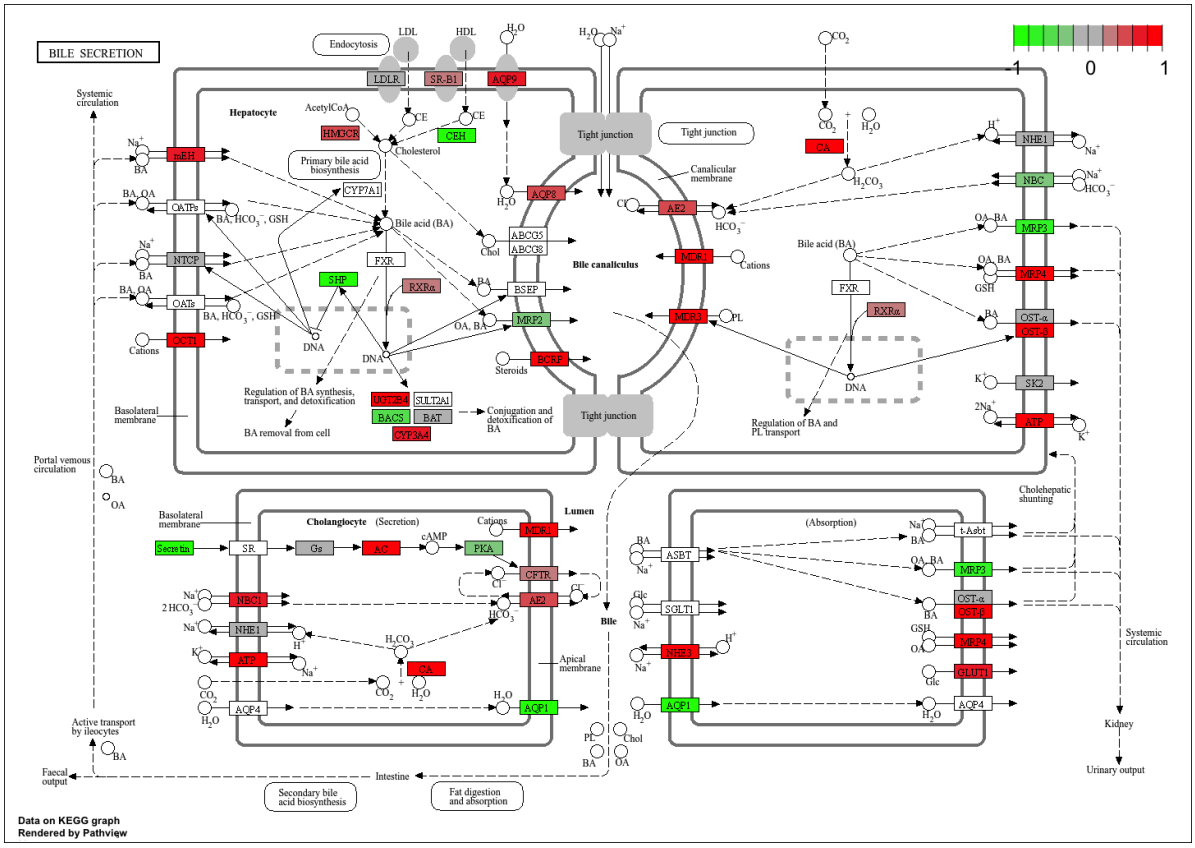
BILE SECRETION
-1
0
1
Endocytosis
LDL
HDL
LDLR
SR-B1
AQP9
Systemic circulation
Hepatocyte
AcetylCoA
HMGCR
CE
CEH
Cholesterol
Primary bile acid biosynthesis
CYP7A1
Bile acid (BA)
γGTP
OATPs
NTCP
OATs
OCT1
Cations
FXR
SHP
RXRα
DNA
ABCG5
ABCG8
Chol
BSEP
MRP2
OA, BA
BCRP
Steroids
Regulation of BA synthesis, transport, and detoxification
BA removal from cell
SULT2A1
BACS
BAT
CYP3A4
Conjugation and detoxification of BA
Basolateral membrane
Portal vemous circulation
Tight junction
Canalicular membrane
AQP8
AE2
MDR1
MDR3
PL
Bile canaliculus
CA
NHE1
NBC
MRP3
MRP4
OST-α
OST-β
SK2
ATP
Regulation of BA and PL transport
Cholehepatic shunting
Cholangiocyte (Secretion)
Secretin
SR
Gs
AC
cAMP
PKA
CFTR
NBC1
NHE1
ATP
AQP4
AQP1
Lumen
Bile
Apical membrane
(Absorption)
ASBT
SGLT1
t-Asbt
GLUT1
Active transport by ileocytes
Faecal output
Intestine
Secondary bile acid biosynthesis
Fat digestion and absorption
Kidney
Urinary output
Data on KEGG graph
Rendered by Pathview

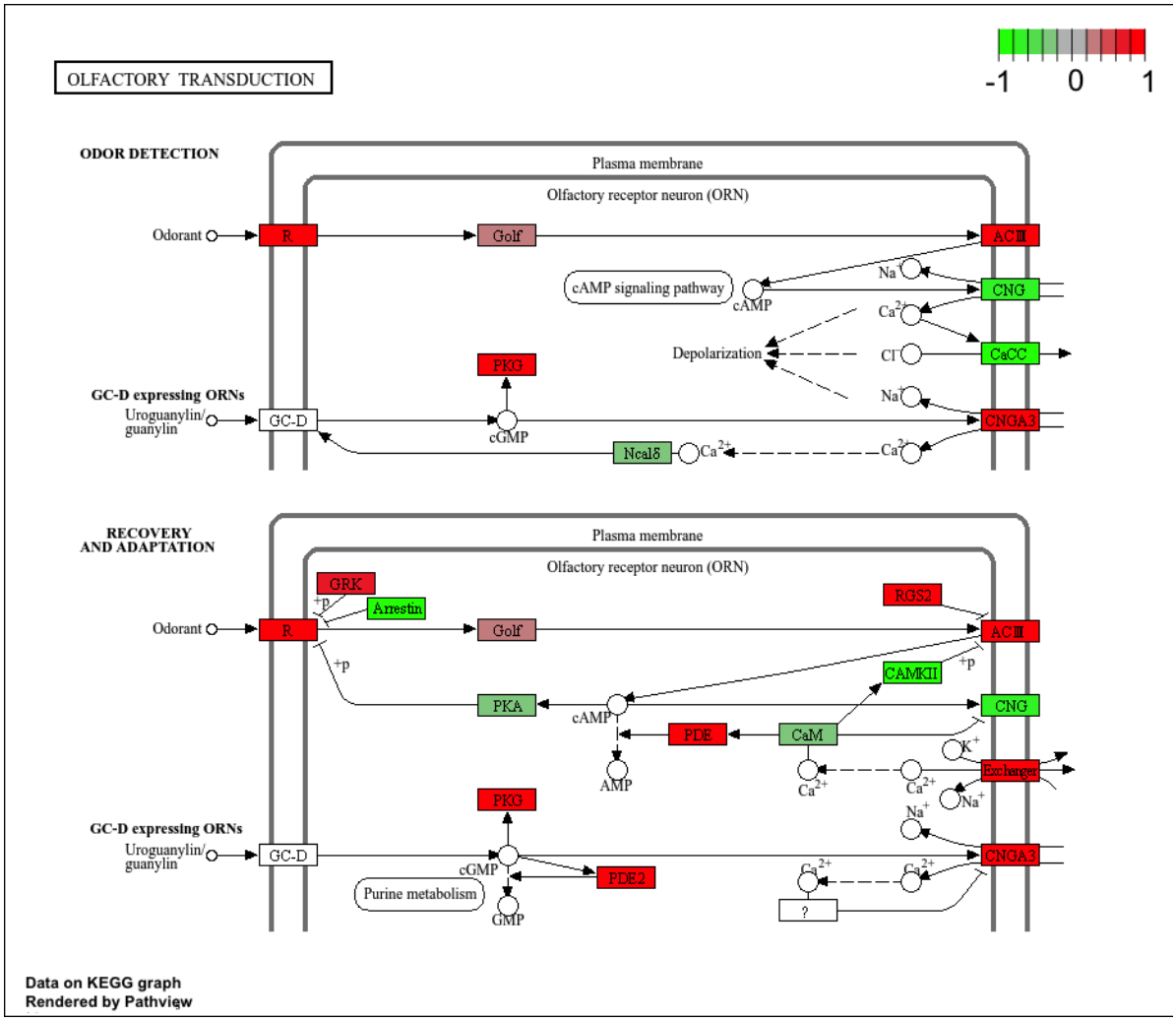

Q. Can you do the same procedure as above to plot the pathview figures for the top 5 down-regulated pathways?

```
# Focus on top 5 downregulated pathways here for demo purposes only
keggrespathways <- rownames(keggres$less)[1:5]

# Extract the 8 character long IDs part of each string
keggresids <- substr(keggrespathways, start=1, stop=8)
keggresids
```

```
[1] "hsa04110" "hsa03030" "hsa03013" "hsa03440" "hsa04114"
```

```r
pathview(gene.data=foldchanges, pathway.id=keggresids, species="hsa")
```

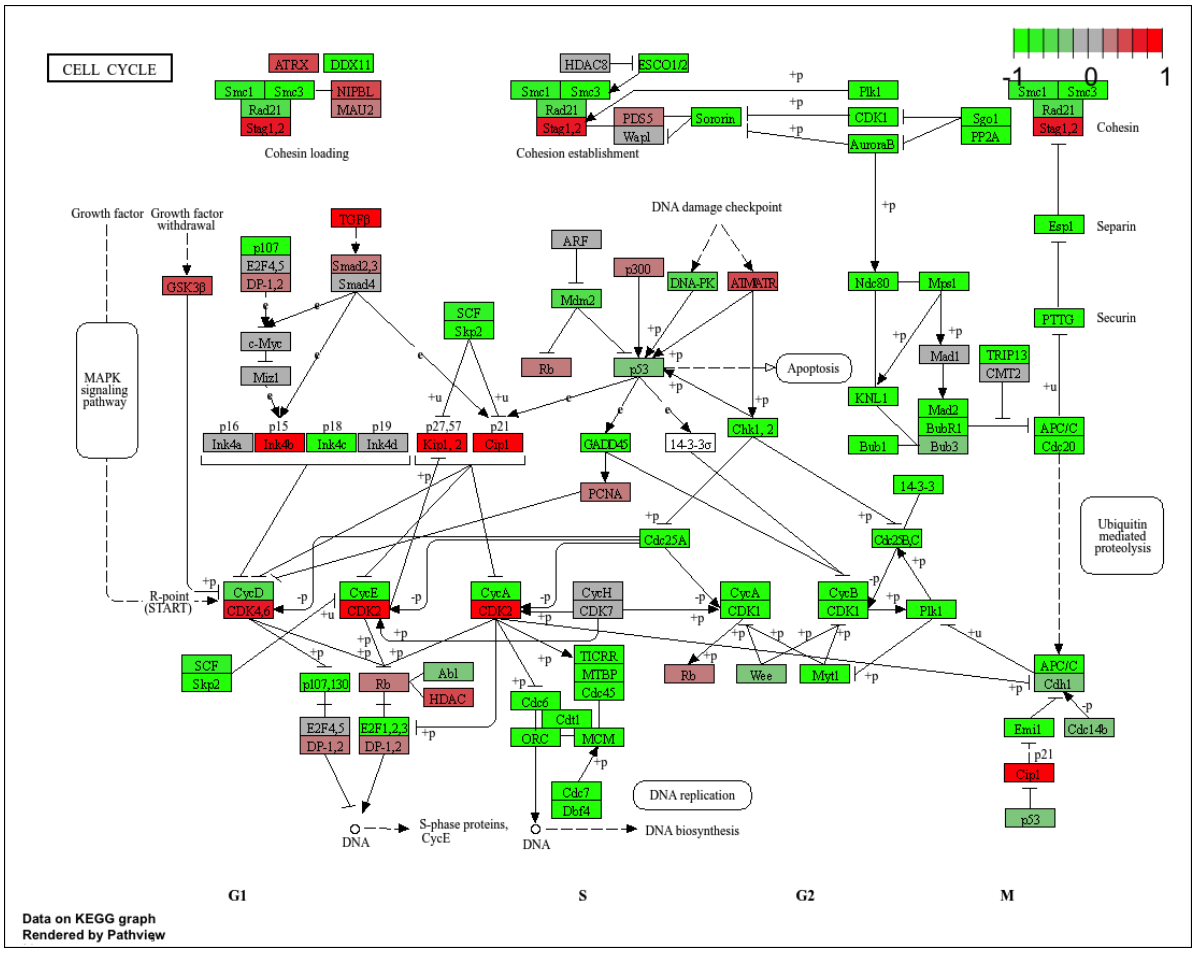

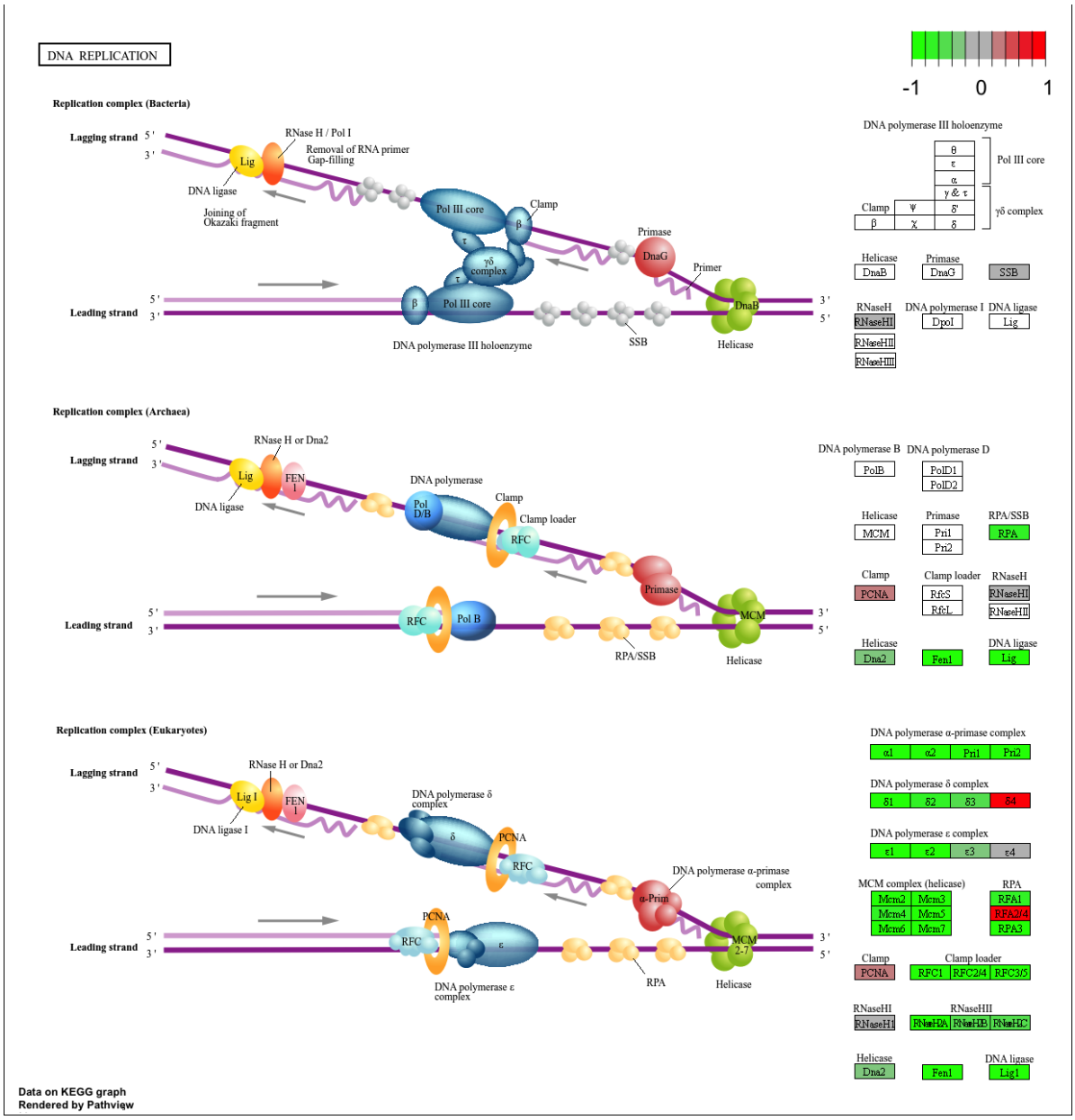
DNA REPLICATION
-1
0
1
Replication complex (Bacteria)
Lagging strand
5'
3'
RNase H / Pol I
Removal of RNA primer
Gap-filling
Lig
DNA ligase
Joining of
Okazaki fragment
Pol III core
Clamp
β
τ
γδ
complex
Primase
DnaG
Primer
Leading strand
DNA polymerase III holoenzyme
SSB
DnaB
Helicase
DNA polymerase III holoenzyme
θ
ε
α
γ & τ
Pol III core
Clamp
ψ
δ'
γδ complex
β
χ
δ
Helicase
DnaB
Primase
DnaG
SSB
RNaseH
RNaseHI
RNaseHII
RNaseHIII
DNA polymerase I
DpoI
DNA ligase
Lig
Replication complex (Archaea)
RNase H or Dna2
FEN
1
DNA polymerase
Pol
D/B
Clamp loader
RFC
Primase
MCM
Pol B
RPA/SSB
DNA polymerase B
PolB
DNA polymerase D
PolD1
PolD2
Helicase
MCM
Primase
Pri1
Pri2
RPA/SSB
RPA
Clamp
PCNA
Clamp loader
RfcS
RfcL
RNaseH
RNaseHI
RNaseHIII
Helicase
Dna2
Fen1
DNA ligase
Lig
Replication complex (Eukaryotes)
RNase H or Dna2
Lig I
FEN
DNA ligase I
DNA polymerase δ
complex
δ
PCNA
RFC
DNA polymerase α-primase
complex
α-Prim
ε
MCM
2-7
RPA
Helicase
DNA polymerase ε
complex
DNA polymerase α-primase complex
α1
α2
Pri1
Pri2
DNA polymerase δ complex
δ1
δ2
δ3
δ4
DNA polymerase ε complex
ε1
ε2
ε3
ε4
MCM complex (helicase)
Mcm2
Mcm3
Mcm4
Mcm5
Mcm6
Mcm7
RPA
RFA1
RFA2/4
RFA3
Clamp
PCNA
Clamp loader
RFC1
RFC2/4
RFC3/5
RNaseHI
RNaseHI1
RNaseHIII
RNaseHIA
RNaseHIB
RNaseHIC
Helicase
Dna2
Fen1
DNA ligase
Lig1
Data on KEGG graph
Rendered by Pathview

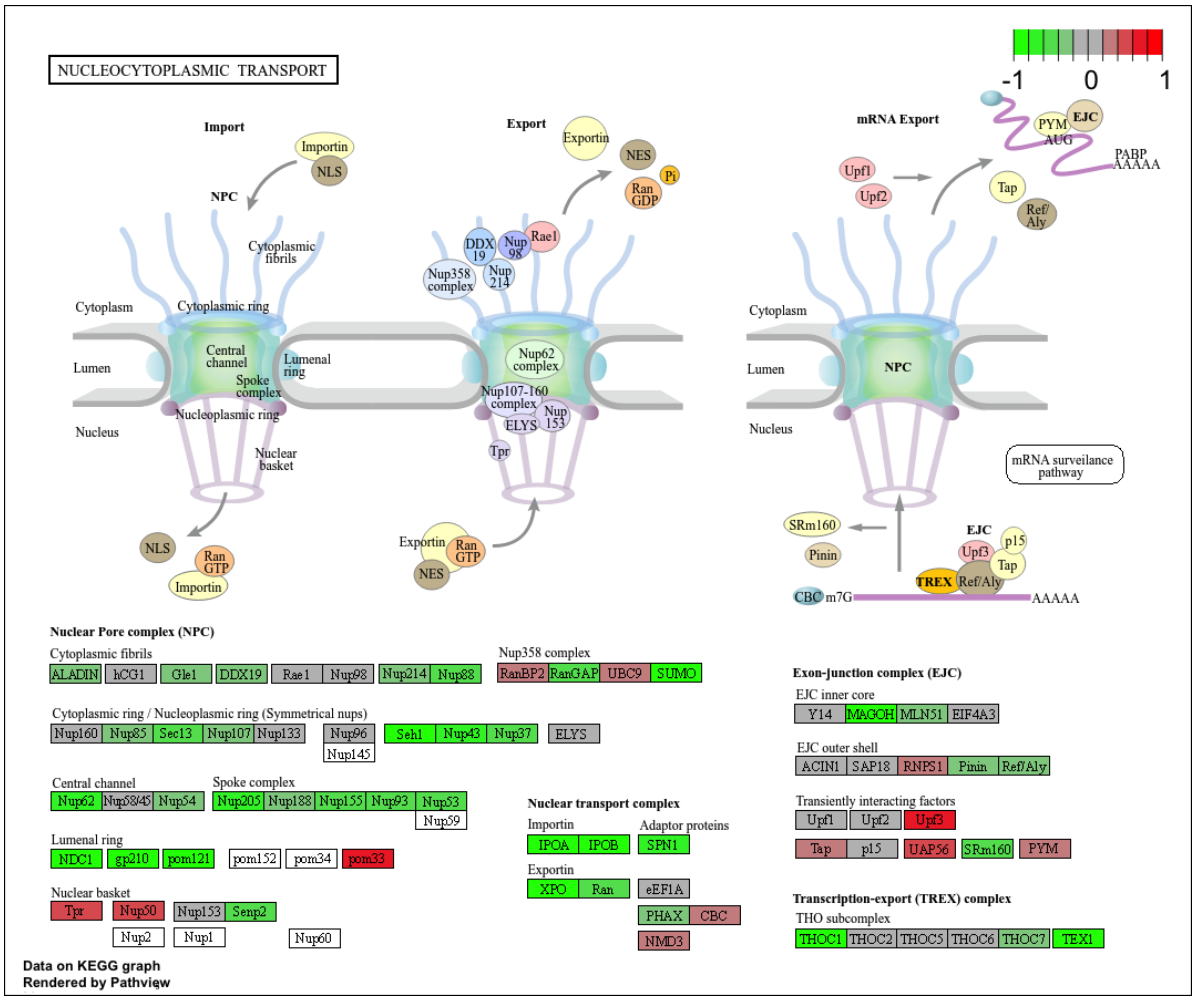
NUCLEOCYTOPLASMIC TRANSPORT
-1
0
1
Import
Importin
NLS
NPC
Cytoplasmic fibrils
Cytoplasm
Cytoplasmic ring
Central channel
Lumenal ring
Spoke complex
Lumen
Nucleoplasmic ring
Nucleus
Nuclear basket
NLS
Ran GTP
Importin
Export
Exportin
NES
Pi
Ran GDP
Rae1
DDX 19
Nup 98
Nup358 complex
Nup 214
Nup62 complex
Nup107-160 complex
ELYS
Nup 153
Tpr
Exportin
Ran GTP
NES
mRNA Export
EJC
PYM
AUG
PABP
AAAAA
Upf1
Upf2
Tap
Ref/ Aly
Cytoplasm
Lumen
NPC
Nucleus
mRNA surveilance pathway
SRm160
Pinin
EJC
p15
Upf3
Tap
TREX
Ref/Aly
CBC
m7G
AAAAA
Nuclear Pore complex (NPC)
Cytoplasmic fibrils
ALADIN
hCG1
Gle1
DDX19
Rae1
Nup98
Nup214
Nup88
Nup358 complex
RanBP2
RanGAP
UBC9
SUMO
Cytoplasmic ring / Nucleoplasmic ring (Symmetrical nups)
Nup160
Nup85
Sec13
Nup107
Nup133
Nup96
Nup145
Seh1
Nup43
Nup37
ELYS
Central channel
Nup62
Nup58/45
Nup54
Spoke complex
Nup205
Nup188
Nup155
Nup93
Nup53
Nup59
Lumenal ring
NDC1
gp210
pom121
pom152
pom34
pom33
Nuclear basket
Tpr
Nup50
Nup153
Senp2
Nup2
Nup1
Nup60
Nuclear transport complex
Importin
IPOA
IPOB
Adaptor proteins
SPN1
Exportin
XPO
Ran
eEF1A
PHAX
CBC
NMD3
Exon-junction complex (EJC)
EJC inner core
Y14
MAGOH
MLN51
EIF4A3
EJC outer shell
ACIN1
SAP18
RNPS1
Pinin
Ref/Aly
Transiently interacting factors
Upf1
Upf2
Upf3
Tap
p15
UAP56
SRm160
PYM
Transcription-export (TREX) complex
THO subcomplex
THOC1
THOC2
THOC5
THOC6
THOC7
TEX1
Data on KEGG graph
Rendered by Pathview

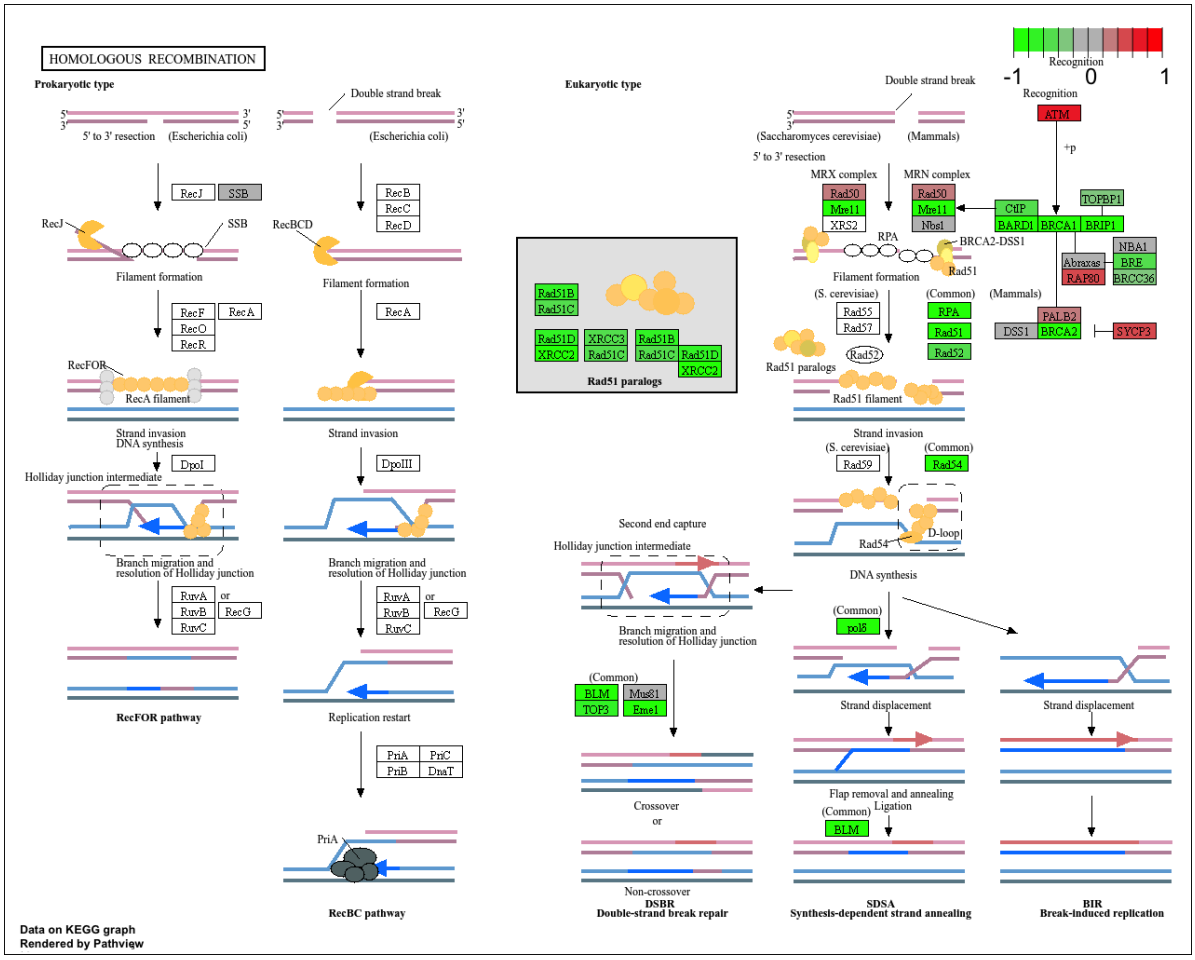
HOMOLOGOUS RECOMBINATION
Prokaryotic type
Eukaryotic type
Double strand break
5' to 3' resection
(Escherichia coli)
RecJ
SSB
RecBCD
RecB
RecC
RecD
Filament formation
RecF
RecO
RecR
RecA
RecFOR
RecA filament
Strand invasion
DNA synthesis
DpoI
DpoIII
Holliday junction intermediate
Branch migration and
resolution of Holliday junction
RuvA
RuvB
RuvC
or
RecG
RecFOR pathway
Replication restart
PriA
PriB
PriC
DnaT
RecBC pathway
Rad51B
Rad51C
Rad51D
XRCC2
XRCC3
Rad51 paralogs
Recognition
-1
0
1
(Saccharomyces cerevisiae)
(Mammals)
ATM
+p
MRX complex
MRN complex
Rad50
Mre11
XRS2
Nbs1
CtIP
BARD1
BRCA1
BRIP1
TOPBP1
RPA
BRCA2-DSS1
Rad51
NBA1
Abraxas
BRE
RAP80
BRCC36
(S. cerevisiae)
(Common)
Rad55
Rad57
Rad52
PALB2
DSS1
BRCA2
SYCP3
Rad51 paralogs
Rad51 filament
Rad59
Rad54
D-loop
DNA synthesis
pol δ
Second end capture
Strand displacement
Flap removal and annealing
Ligation
BLM
TOP3
Mus81
Eme1
Crossover
Non-crossover
DSBR
Double-strand break repair
SDSA
Synthesis-dependent strand annealing
BIR
Break-induced replication
Data on KEGG graph
Rendered by Pathview

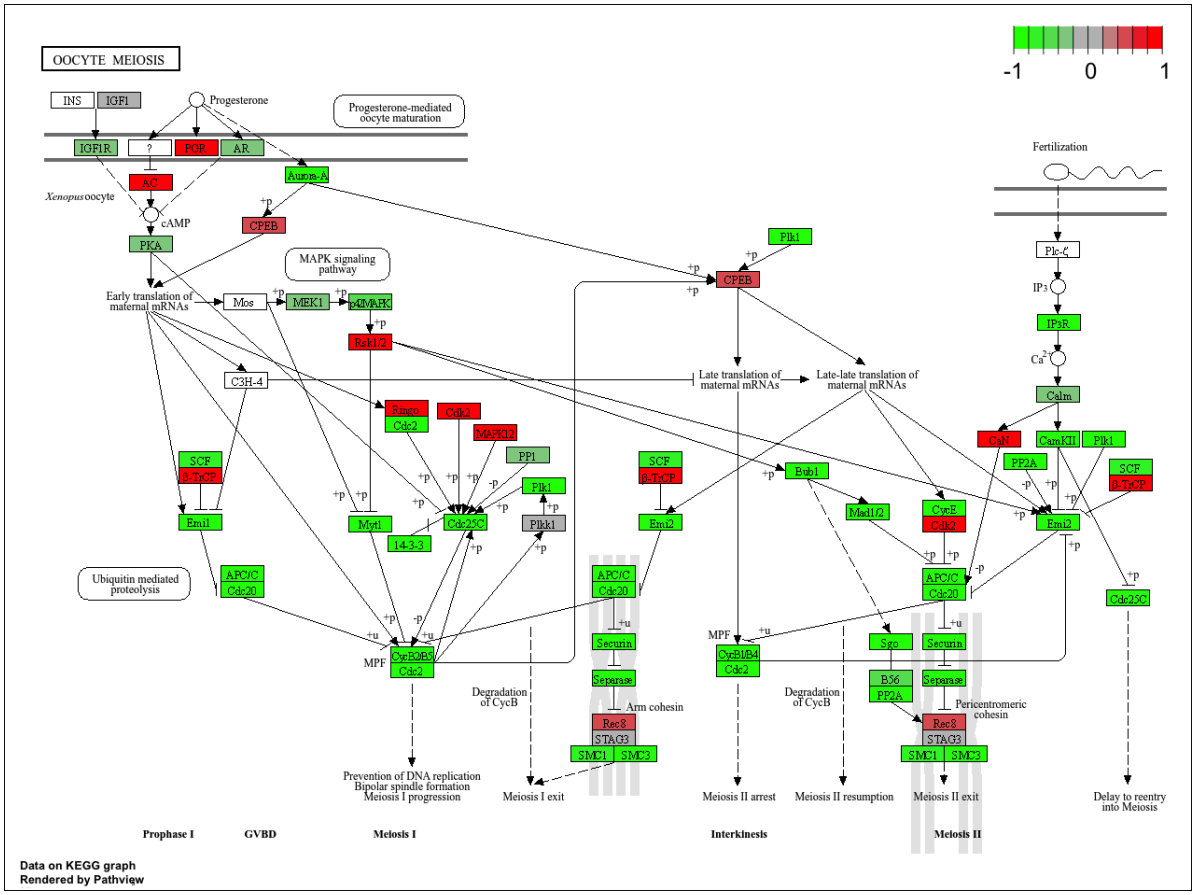

Gene Ontology

```
data(go.sets.hs)
data(go.subs.hs)

# Focus on Biological Process subset of GO
gobpsets = go.sets.hs[go.subs.hs$BP]

gobpres = gage(foldchanges, gsets=gobpsets)

lapply(gobpres, head)
```

```
$greater
                                          p.geomean stat.mean        p.val
GO:0007156 homophilic cell adhesion       8.519724e-05  3.824205 8.519724e-05
```

```
GO:0002009 morphogenesis of an epithelium 1.396681e-04  3.653886 1.396681e-04
GO:0048729 tissue morphogenesis           1.432451e-04  3.643242 1.432451e-04
GO:0007610 behavior                       1.925222e-04  3.565432 1.925222e-04
GO:0060562 epithelial tube morphogenesis  5.932837e-04  3.261376 5.932837e-04
GO:0035295 tube development               5.953254e-04  3.253665 5.953254e-04
                                              q.val set.size         exp1
GO:0007156 homophilic cell adhesion       0.1951953      113 8.519724e-05
GO:0002009 morphogenesis of an epithelium 0.1951953      339 1.396681e-04
GO:0048729 tissue morphogenesis           0.1951953      424 1.432451e-04
GO:0007610 behavior                       0.1967577      426 1.925222e-04
GO:0060562 epithelial tube morphogenesis  0.3565320      257 5.932837e-04
GO:0035295 tube development               0.3565320      391 5.953254e-04

$less
                                            p.geomean stat.mean        p.val
GO:0048285 organelle fission             1.536227e-15 -8.063910 1.536227e-15
GO:0000280 nuclear division              4.286961e-15 -7.939217 4.286961e-15
GO:0007067 mitosis                       4.286961e-15 -7.939217 4.286961e-15
GO:0000087 M phase of mitotic cell cycle 1.169934e-14 -7.797496 1.169934e-14
GO:0007059 chromosome segregation        2.028624e-11 -6.878340 2.028624e-11
GO:0000236 mitotic prometaphase          1.729553e-10 -6.695966 1.729553e-10
                                                q.val set.size         exp1
GO:0048285 organelle fission             5.841698e-12      376 1.536227e-15
GO:0000280 nuclear division              5.841698e-12      352 4.286961e-15
GO:0007067 mitosis                       5.841698e-12      352 4.286961e-15
GO:0000087 M phase of mitotic cell cycle 1.195672e-11      362 1.169934e-14
GO:0007059 chromosome segregation        1.658603e-08      142 2.028624e-11
GO:0000236 mitotic prometaphase          1.178402e-07       84 1.729553e-10

$stats
                                          stat.mean     exp1
GO:0007156 homophilic cell adhesion        3.824205 3.824205
GO:0002009 morphogenesis of an epithelium  3.653886 3.653886
GO:0048729 tissue morphogenesis            3.643242 3.643242
GO:0007610 behavior                        3.565432 3.565432
GO:0060562 epithelial tube morphogenesis   3.261376 3.261376
GO:0035295 tube development                3.253665 3.253665
```

Reactome Analysis

```
sig_genes <- res[res$padj <= 0.05 & !is.na(res$padj), "symbol"]
print(paste("Total number of significant genes:", length(sig_genes)))
```

```
[1] "Total number of significant genes: 8147"
```

```
write.table(sig_genes, file="significant_genes.txt", row.names=FALSE, col.names=FALSE, quote=
```

> Q: What pathway has the most significant "Entities p-value"? Do the most significant pathways listed match your previous KEGG results? What factors could cause differences between the two methods?

The Cell Cycle (mitotic) has the most significant "Entities P-value" at 2.1E-5 on Reactome. My previous KEGG results also show that the Cell Cycle has the lowest p-value, however, the p-values are different and the KEGG results differ in the order and amount of pathways listed. Reactome provides a more detailed pathway analysis in contrast to the KEGG pathway analysis only offering signaling and metabolic pathways.