CUI Devices is now Same Sky! Learn More

MODEL: MSD-4-A | DESCRIPTION: MICRO SD CARD CONNECTOR

FEATURES

- micro SD card connector
- push in, auto eject out
- card detect switch
- gold flash
- surface mount
- UL94V-0

SPECIFICATIONS

parameter	conditions/description	min	typ	max	units
rated voltage				30	V
rated current				0.5	A
contact resistance[1]				100	mΩ
insulation resistance	at 500 Vdc, between adjacent circuits	1,000			MΩ
voltage withstand	for 1 minute, between adjacent circuits		100		Vac
insertion force	at a rate of 25 mm/min			10	N
withdrawal force	at a rate of 25 mm/min	0.5			N
life			5,000		cycles
operating temperature		-40		85	°C
flammability rating	UL94V-0				
RoHS	yes				

Note: 1. When measured at 20 mV / 100 mA.

SOLDERABILITY

parameter	conditions/description	min	typ	max	units
reel storage	at relative humidity 40~70% reel opened: use within 1 month reel unopened: up to 15 month shelf life	16	22	28	°C
reflow soldering	see reflow profile			250	°C

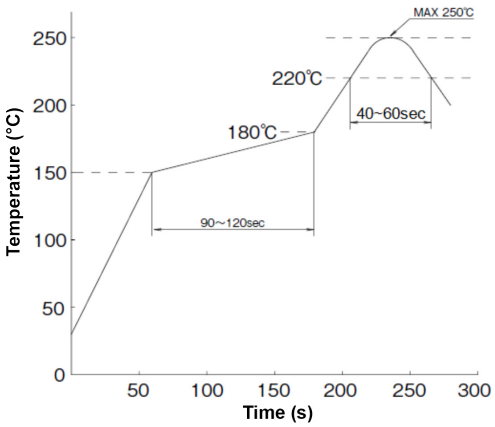

MECHANICAL DRAWING

units: mm
tolerance:
X.X ±0.38 mm
X.XX ±0.25 mm
X.XXX ±0.10 mm
unless otherwise specified

DESCRIPTION	MATERIAL	PLATING/COLOR
housing	LCP 30% GF (UL94V-0)	black
contact terminals	phosphor bronze t=0.15 mm	contact area: gold flash over nickel solder area: tin over nickel
cover	SUS304 t=0.15 mm	nickel

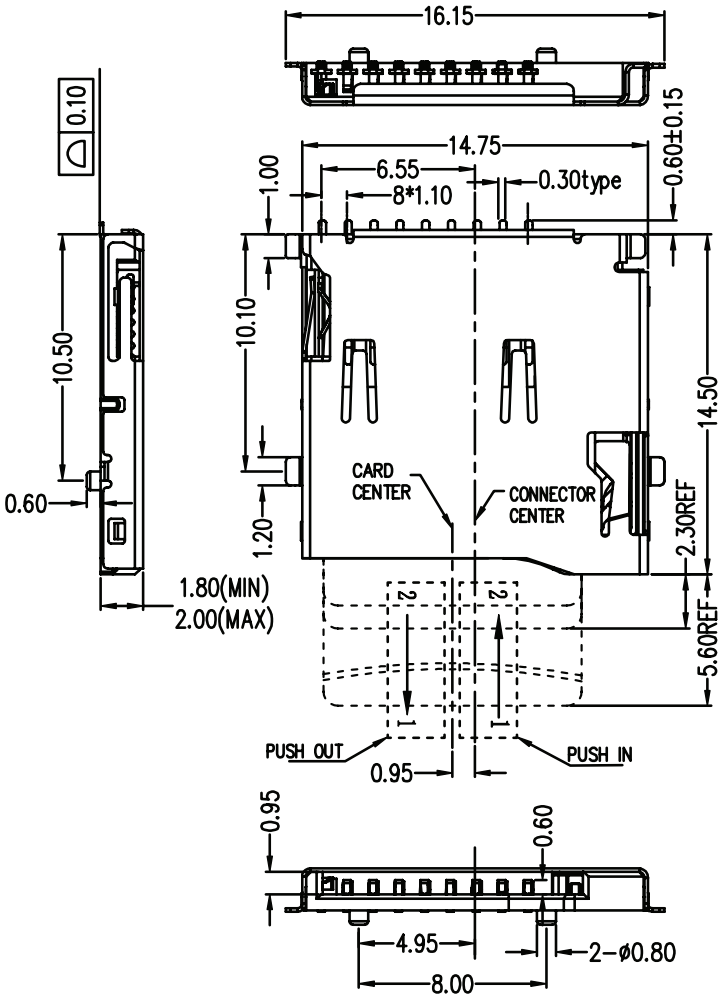

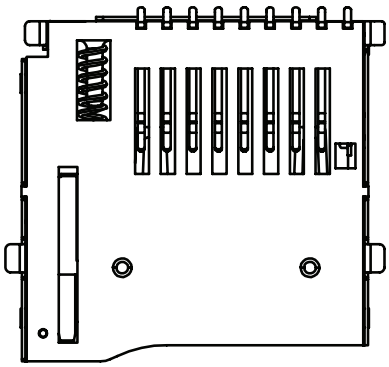

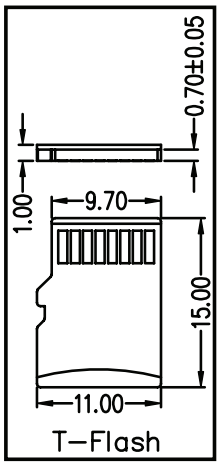

MECHANICAL DRAWING (CONTINUED)

units: mm
PCB tolerance: ±0.05 mm

PIN CONNECTIONS			
PIN	SIGNAL NAME	TYPE	DESCRIPTION
1	DAT2	I/O/PP	DATA LINE (BIT 2)
2	CD/DAT3	I/O/PP	CARD DETECT / DATA LINE (BIT 3)
3	CMD	PP	COMMAND / RESPONSE
4	VDD	S	SUPPLY VOLTAGE
5	CLK	I	CLOCK
6	VSS	S	SUPPLY VOLTAGE GROUND
7	DAT0	I/O/PP	DATA LINE (BIT 0)
8	DAT1	I/O/PP	DATA LINE (BIT 1)
CD	-	-	CARD DETECT SWITCH
GND	-	-	COVER GROUND

CARD STATUS	
WITHOUT CARD	CARD INSERTED

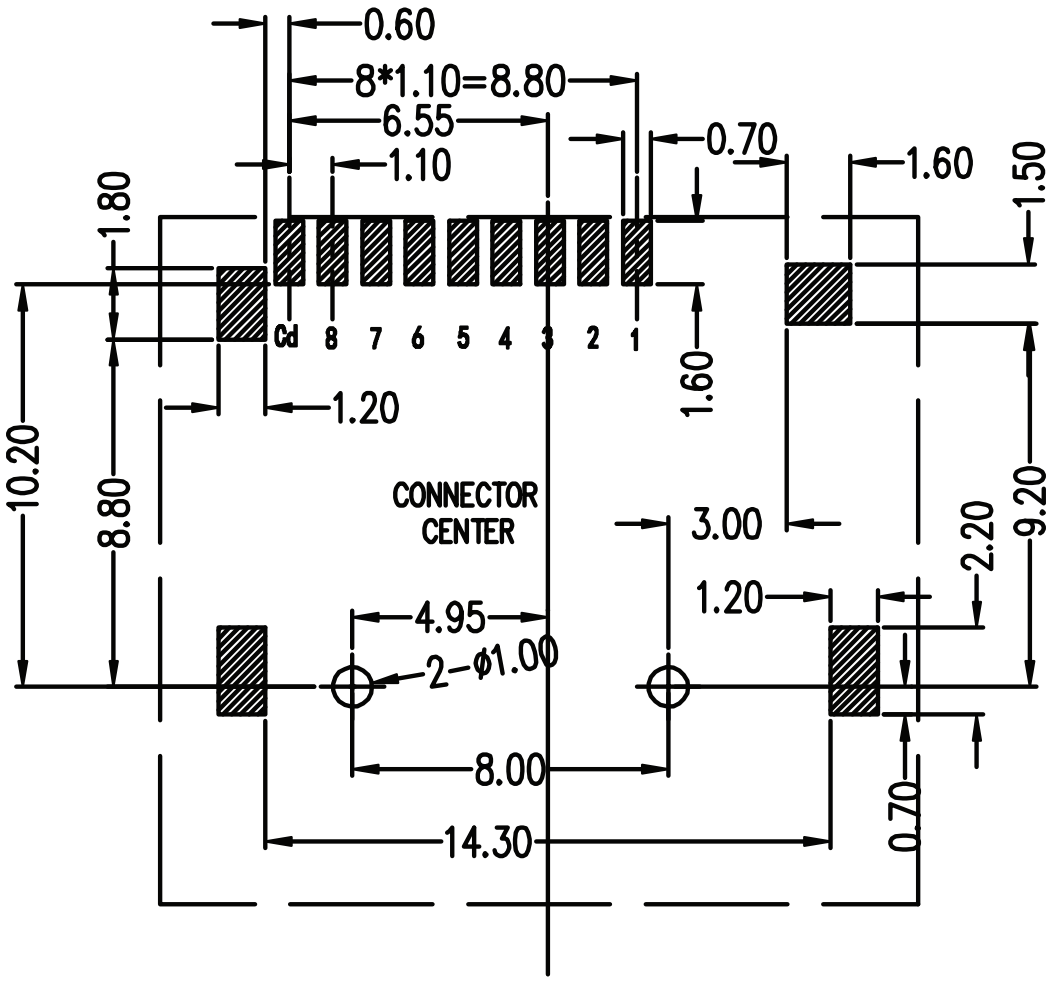

Recommended PCB Layout
Top View

PACKAGING

units: mm

Reel Size: Ø330 mm
Reel QTY: 1,000 pcs per reel

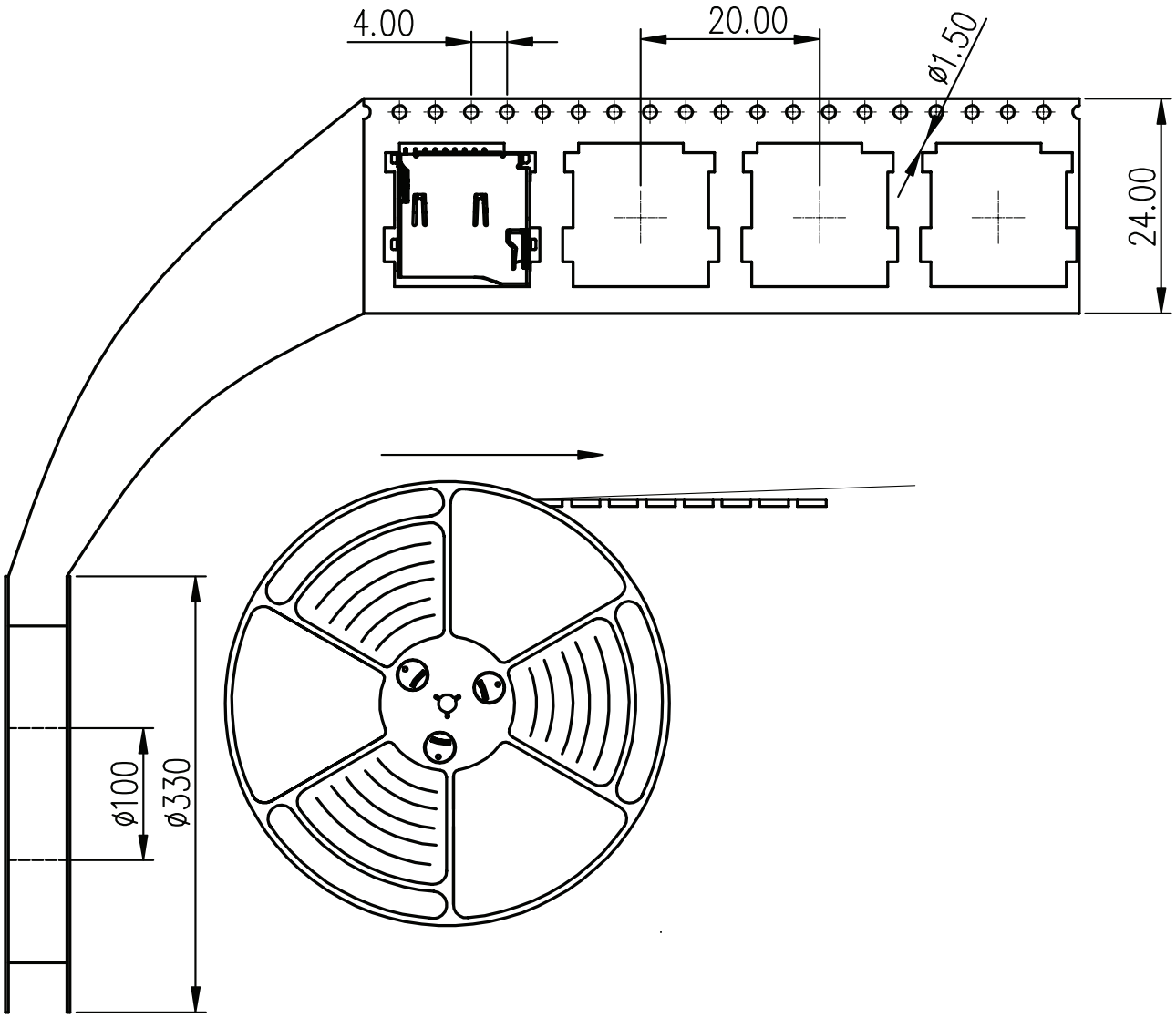

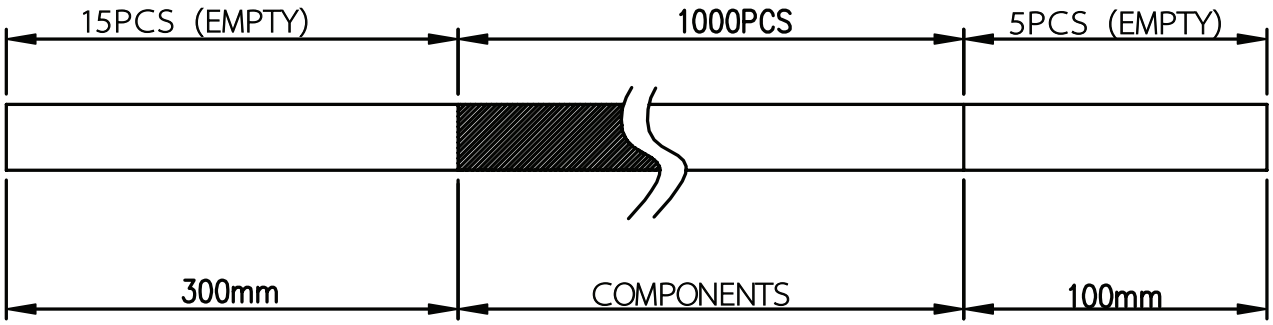

REVISION HISTORY

rev.	description	date
1.0	initial release	10/24/2023
1.01	CUI Devices rebranded to Same Sky	09/12/2024
1.02	changed manufacturing location	11/01/2024

The revision history provided is for informational purposes only and is believed to be accurate.

Same Sky offers a one (1) year limited warranty. Complete warranty information is listed on our website.

Same Sky reserves the right to make changes to the product at any time without notice. Information provided by Same Sky is believed to be accurate and reliable. However, no responsibility is assumed by Same Sky for its use, nor for any infringements of patents or other rights of third parties which may result from its use.

Same Sky products are not authorized or warranted for use as critical components in equipment that requires an extremely high level of reliability. A critical component is any component of a life support device or system whose failure to perform can be reasonably expected to cause the failure of the life support device or system, or to affect its safety or effectiveness.