UNIVERSITY OF ILLINOIS URBANA-CHAMPAIGN

ECE408 - CS483 - CSE408 Spring 2026
Applied Parallel Programming

Lecture 11: Computation in CNNs and Transformers

Volodymyr Kindratenko

2/24/2026

Course Reminders

- Lab updates
  - No labs due this week, please use this time to work on the project and prepare for the exam
- Project milestone 1 is about to be released
  - Due in 2 weeks
- Midterm 1
  - When: March 3rd, 7-10pm, 3 hours long
  - Notify me by this Wednesday if you have a conflict
  - Midterm 1 review session: see Canvas for details
  - Exam examples from past semesters posted on Canvas

Today's Objectives

- To learn to implement the different types of layers in a Convolutional Neural Network (CNN)
  - Brief intro to CNN Project Milestone 1
- To learn about computations used in Transformers

Review: Multi-Layer Perceptron (MLP) for Digit Recognition

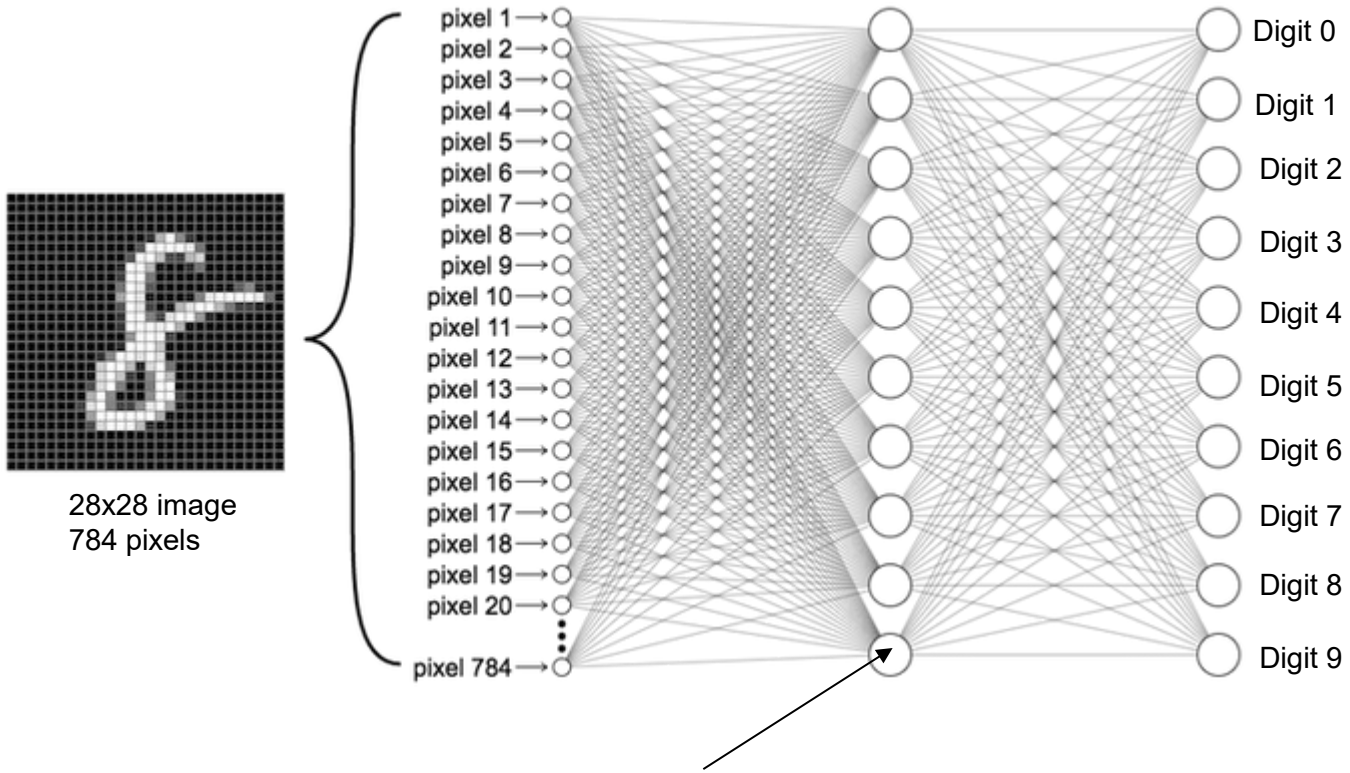

n_k^1 = activation($\boldsymbol{w}_k \boldsymbol{x}$+$b_k$)

This network has
- 784 nodes on input layer (L0)
- 10 nodes on hidden layer (L1)
- 10 nodes on output layer (L2)

784*10 weights + 10 biases for L1
10*10 weights + 10 biases for L2

A total of 7,960 parameters

Each node represents a function, based on a linear combination of inputs + bias

Activation function “repositions” output value.

Sigmoid, sign, ReLU are common…

Multi-Layer Perceptron (MLP) for Digit Recognition

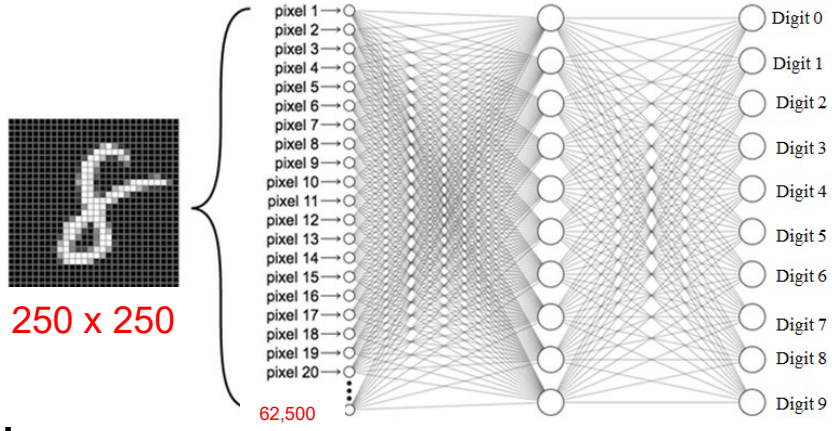

Consider a 250 x 250 image…

- Input: 2D image treated as 1D vector
- Fully connected layer is huge:
  - 62,500 (250^2) weights per node!
  - Comparable number of nodes gives ~4B weights total!
- Need >1 hidden layer? Bigger images?
- Too much computation, and too much memory.

Traditional feature detection in image processing uses

- Filters → Convolution kernels
- Can we use them in neural networks?

2D Convolution

X

1	2	3	4	5	6	7
2	3	4	5	6	7	8
3	4	5	6	7	8	9
4	5	6	7	8	5	6
5	6	7	8	5	6	7
6	7	8	9	0	1	2
7	8	9	0	1	2	3

W

1	2	3	2	1
2	3	4	3	2
3	4	5	4	3
2	3	4	3	2
1	2	3	2	1

1	4	9	8	5
4	9	16	15	12
9	16	25	24	21
8	15	24	21	16
5	12	21	16	5

Y

		321				

Convolution Naturally Supports Varying Input Sizes

- As discussed so far,
  - perceptron layers have fixed structure, so
  - number of inputs / outputs is fixed.

- Convolution enables variably-sized inputs (observations of the same kind of thing)
  - Audio recording of different lengths
  - Image with more/fewer pixels

Example Convolution Inputs

	Single-channel	Multi-channel
1D	audio waveform	Skeleton animation data: 1-D joint angles for each joint
2D	Fourier-transformed audio data Convolve over frequency axis: invariant to frequency shifts Convolve over time axis: invariant to shifts in time	Color image data: 2D data for R,G,B channels
3D	Volumetric data (example: medical imaging)	Color video: 2D data across 1D time for R,G,B channels

LeNet-5:CNN for Hand-Written Character Recognition

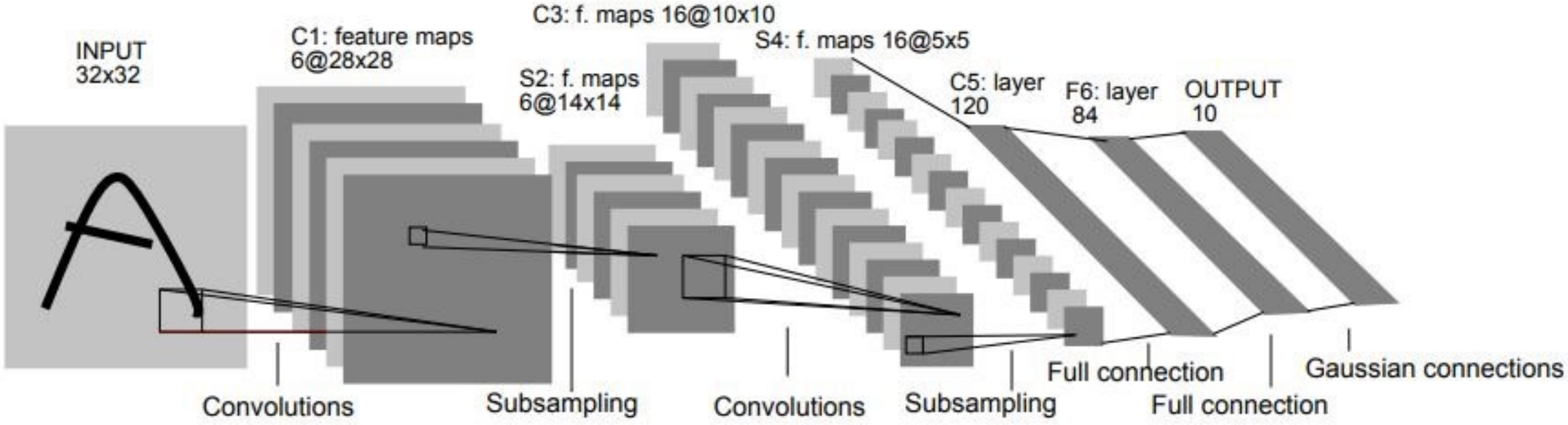

Many Types of CNNs

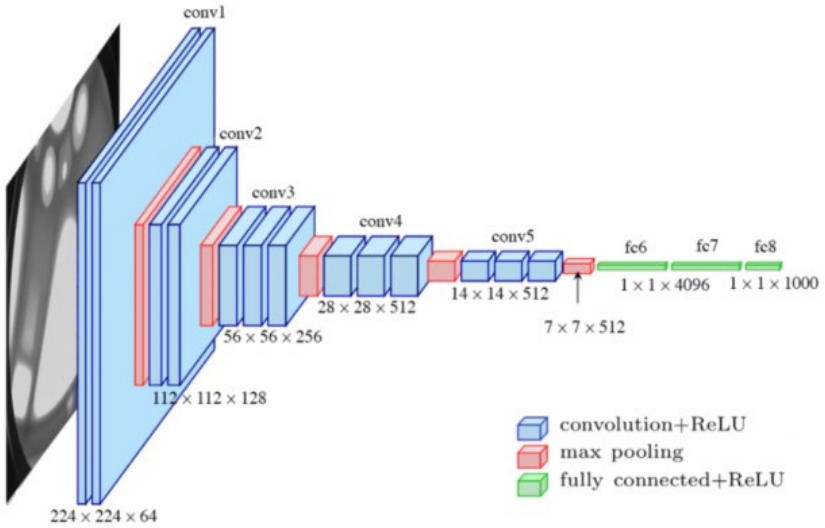

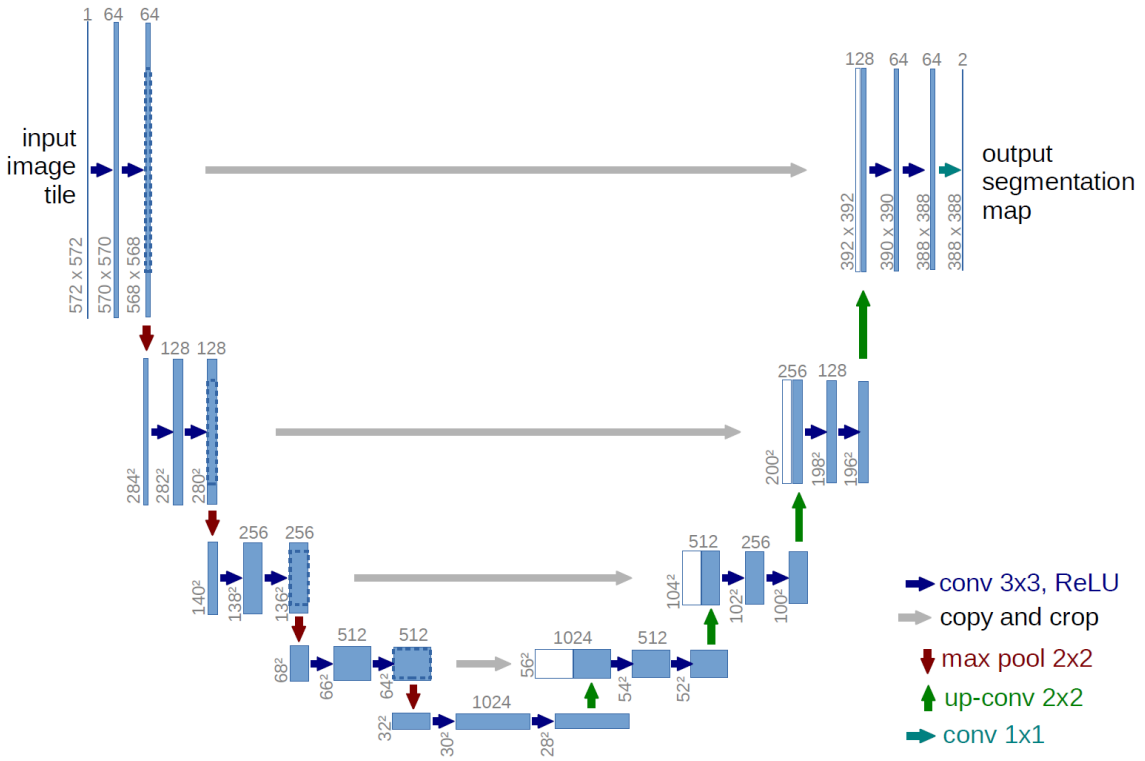

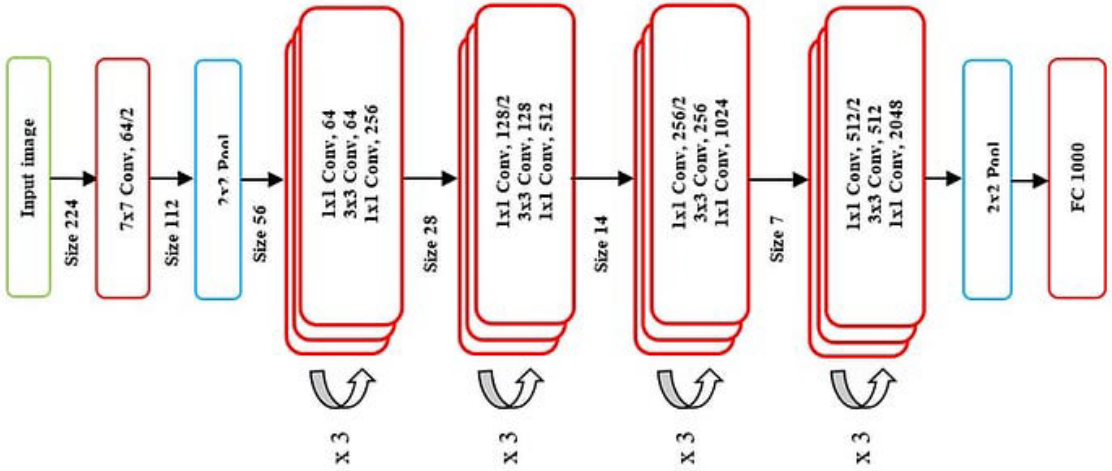

Deep Learning Impact in Computer Vision

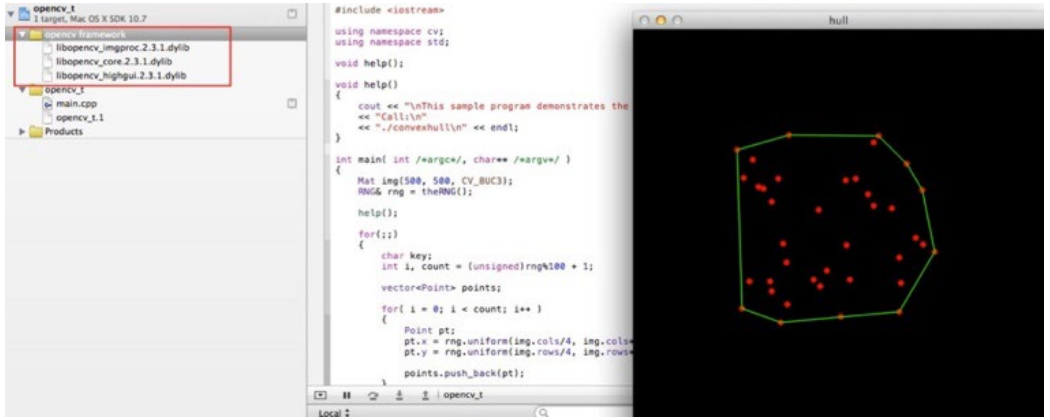

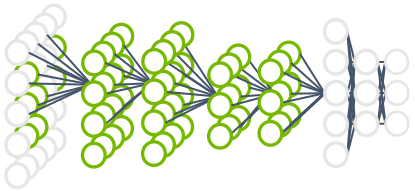

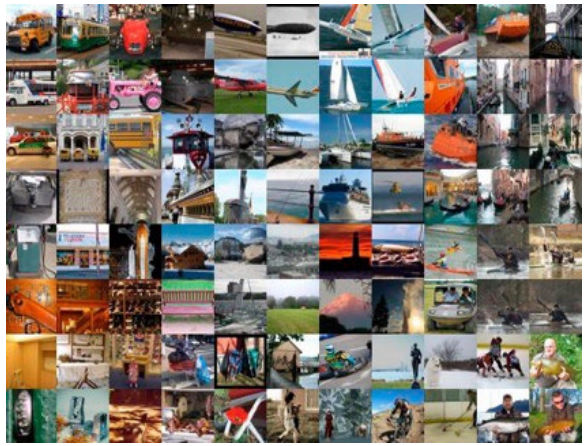

- The Toronto team used GPUs and trained on 1.2M images in their 2012 winning entry at the Large Scale Visual Recognition Challenge

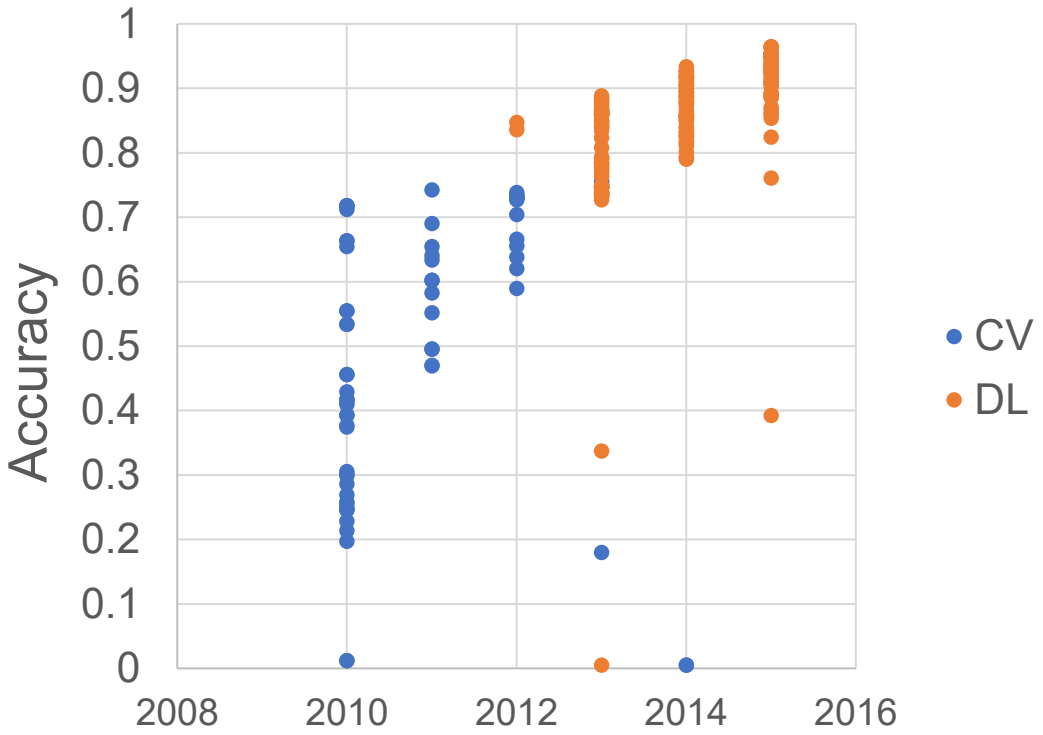

Why Convolution

- Sparse interactions
  - Meaningful features in small spatial regions
  - Need fewer parameters (less storage, better statistical characteristics, faster training)
  - Need multiple layers for wide receptive field

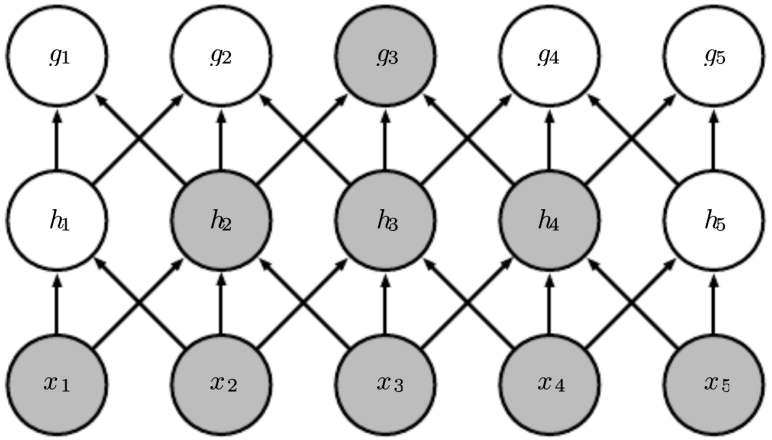

Why Convolution

- Parameter sharing
  - Kernel mask is applied repeatedly computing layer output
- Equivariant Representations
  - If input is translated, output is similarly translated
  - Output is a map of where features appear in input

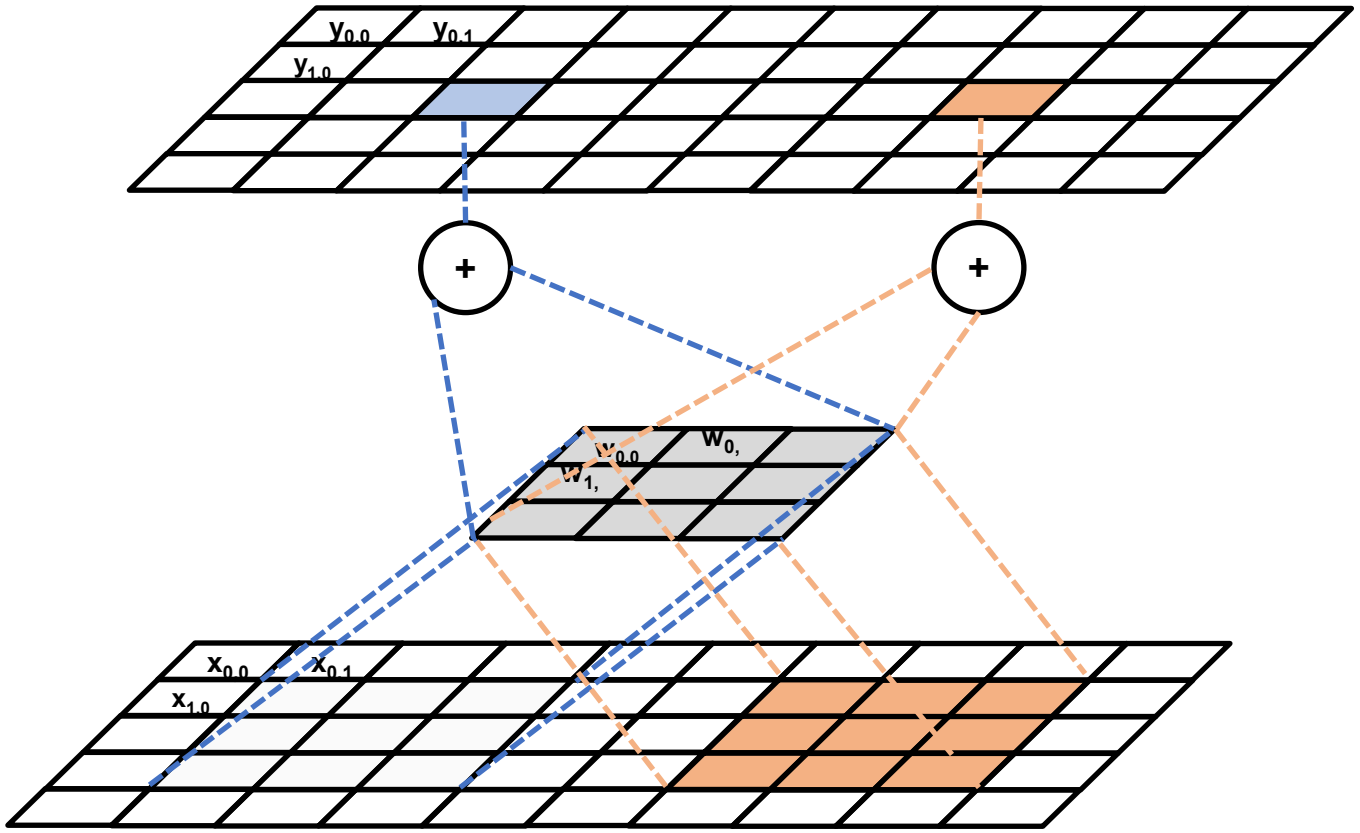

Convolution vs Multi-Layer Perceptron

Convolution

- 2D Matrix
- $Y = W \otimes X$
- Kernel smaller than input: smaller receptive field
- Fewer Weights

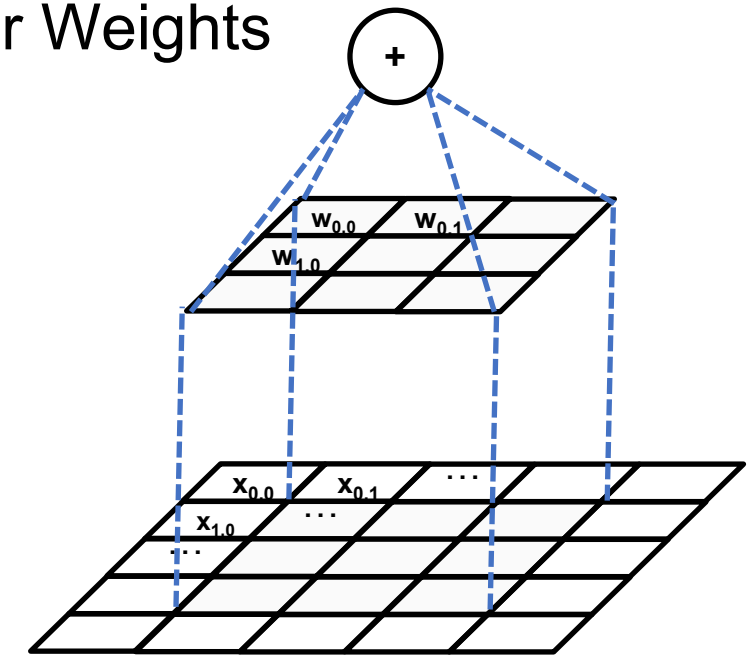

MLP

- Vector
- $Y = w\,x + b$
- Maximum receptive field
- More weights

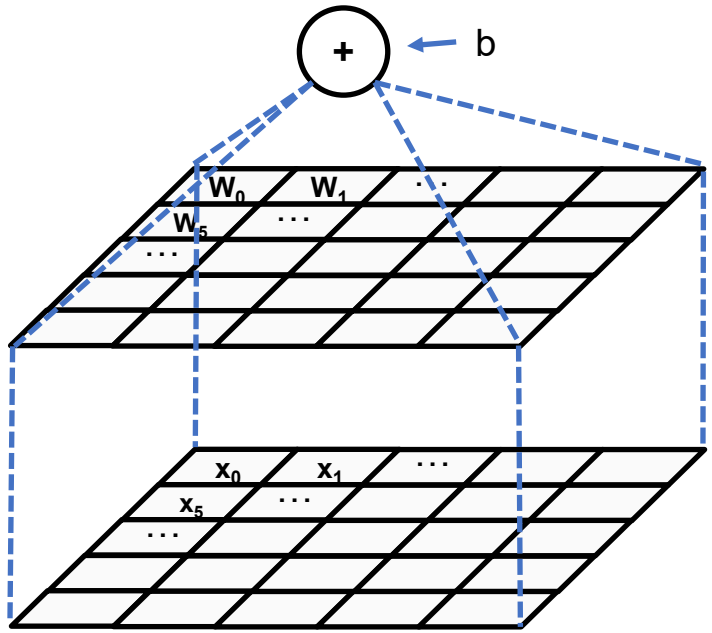

Anatomy of a Convolution Layer

Input features

- A inputs each $N_1 \times N_2$

Convolution Layer

- B convolution kernels each $K_1 \times K_2$

Output Features (total of B)

- $A \times B$ outputs each $(N_1 - K_1+1) \times (N_2 - K_2+1)$

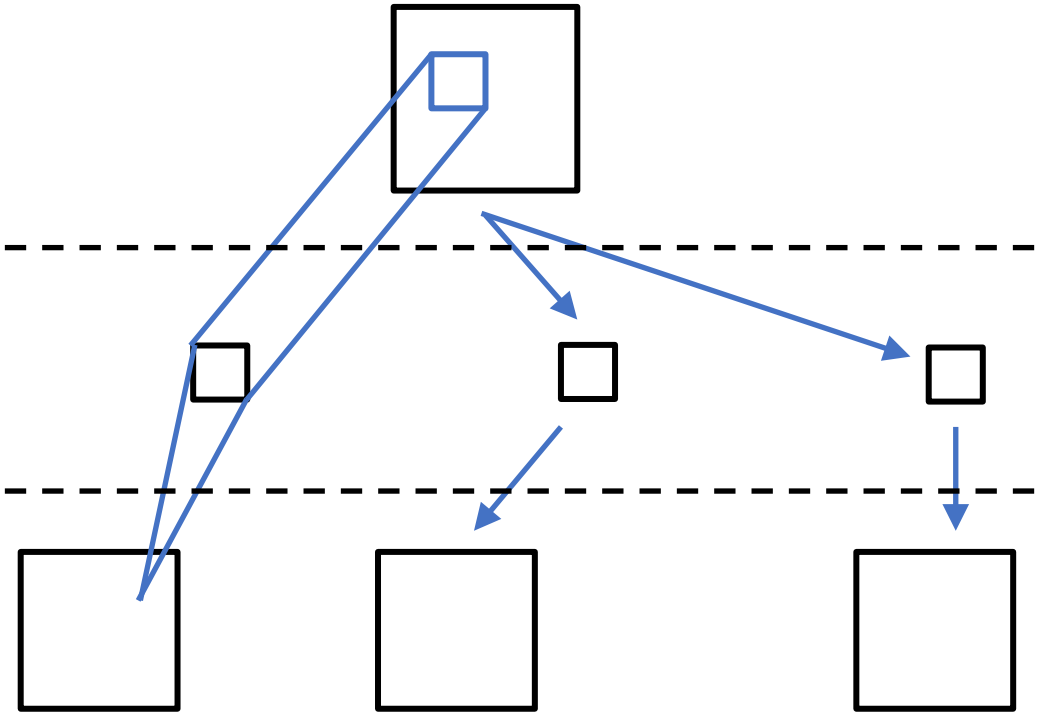

Notion of a Channel in Input Layer

Some Set of Input Features are Related

- For example: Red, Green, Blue

Convolution Layer

- Different kernels per channel

Output Features

- Channels combine per output feature

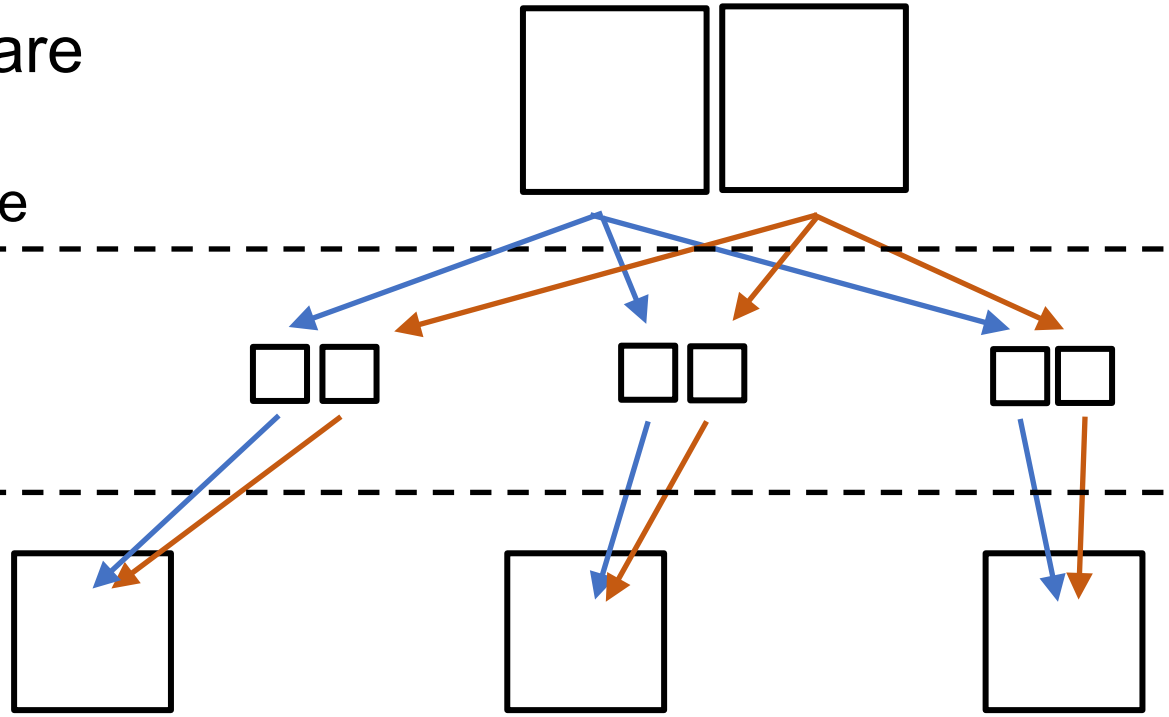

2-D Pooling (Subsampling)

- A subsampling layer
  - Sometimes with bias and non-linearity built in
- Common types
  - max, average, L^2 norm, weighted average
- Helps make representation invariant to size scaling and small translations in the input

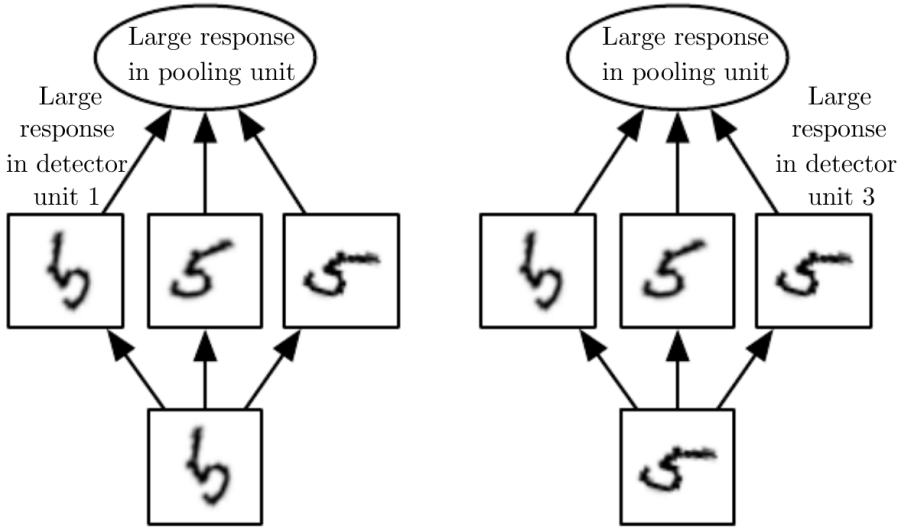

Forward Propagation

Output Size

$H_{out} = H - K + 1$

$W_{out} = W - K + 1$

Weights W

M feature maps

C channels per map

K×K pixels per channel

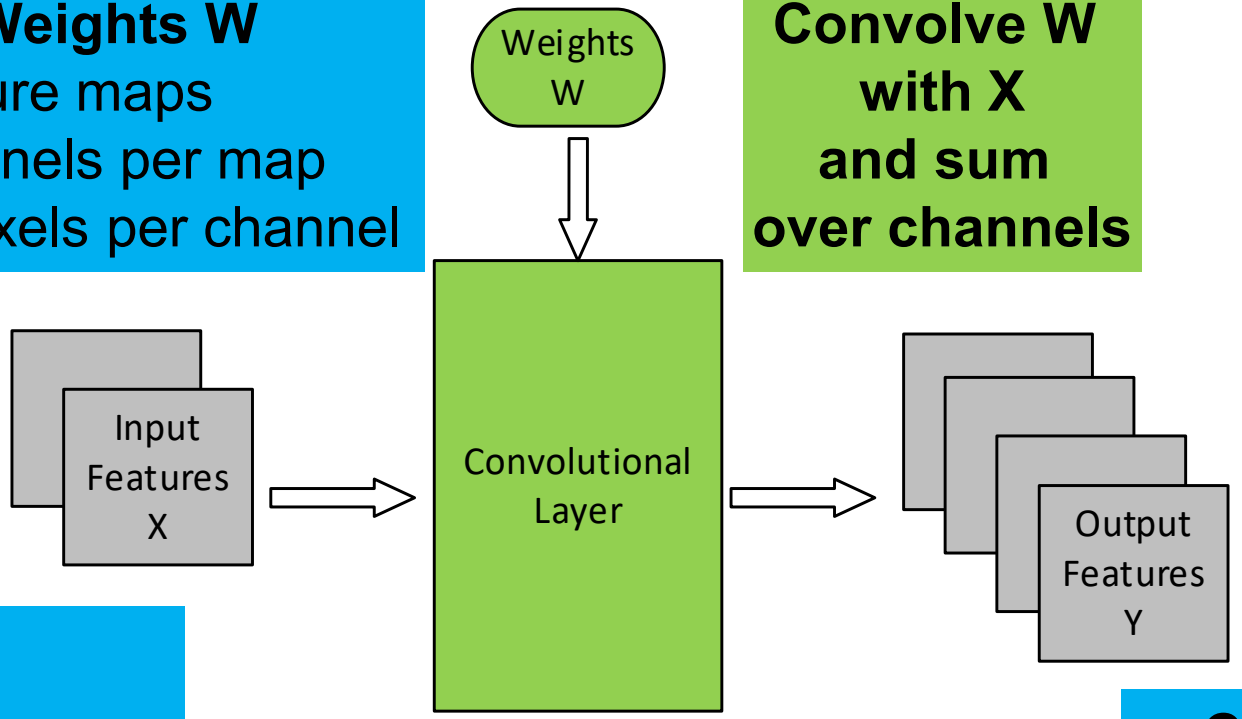

Convolve W with X and sum over channels

Input X

B images

C channels per image

H×W pixels per channel

Convolution Output Y

B images

M features per image

$H_{out} \times W_{out}$ values per feature

Outputs Must Use Full Mask/Kernel

X

1	2	3	4	5	6	7
2	3	4	5	6	7	8
3	4	5	6	7	8	9
4	5	6	7	8	5	6
5	6	7	8	5	6	7
6	7	8	9	0	1	2
7	8	9	0	1	2	3

Compute only this part of Y.

Y

		321				

W

1	2	3	2	1
2	3	4	3	2
3	4	5	4	3
2	3	4	3	2
1	2	3	2	1

1	4	9	8	5
4	9	16	15	12
9	16	25	24	21
8	15	24	21	16
5	12	21	16	5

Example of the Forward Path of a Convolution Layer

Output Size

$H_{out} = H - K + 1$
$= 3 - 2 + 1 = 2$
$W_{out} = W - K + 1$
$= 3 - 2 + 1 = 2$

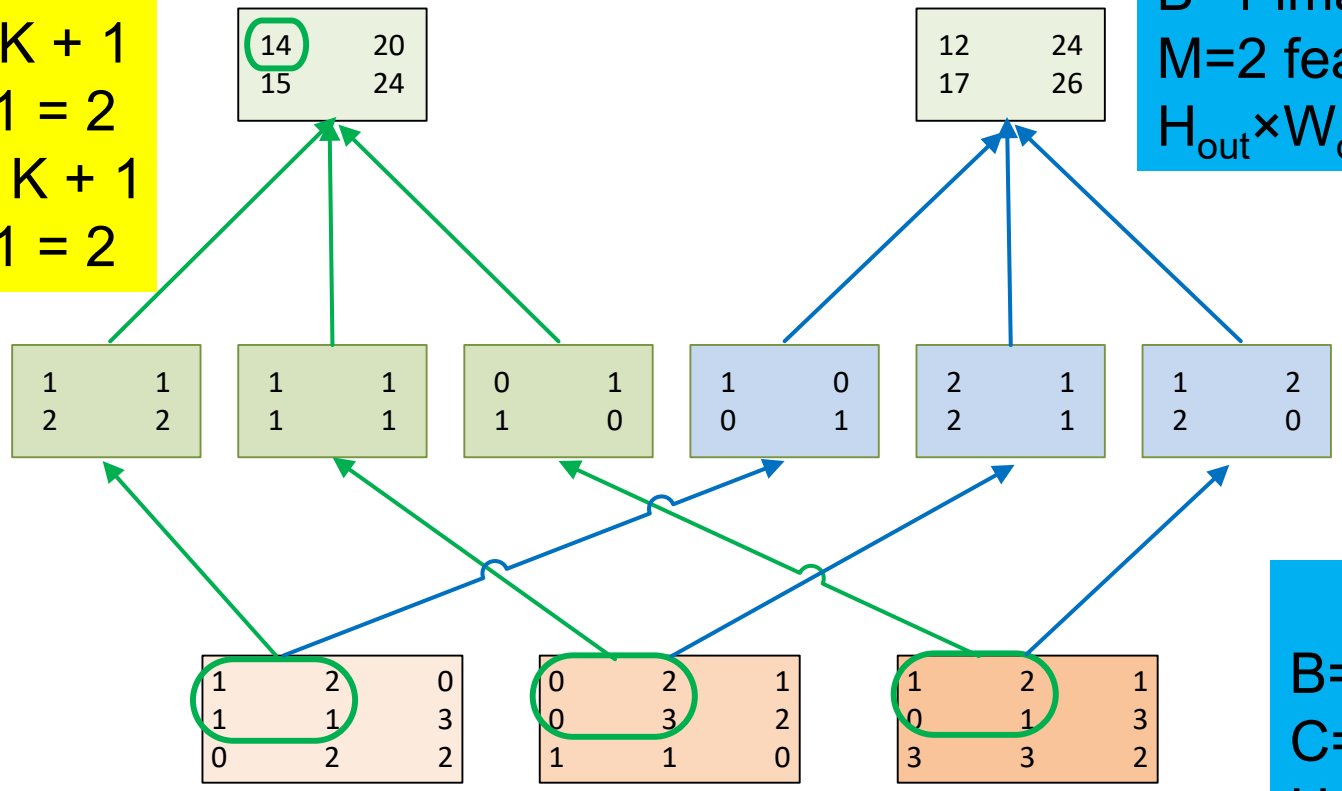

Convolution Output Y

B=1 image
M=2 features per image
$H_{out} \times W_{out}$=2×2 values per feature

Weights W

M=2 feature maps
C=3 channels per map
K×K=2×2 pixels per channel

Input X

B=1 image
C=3 channels
H×W=3×3 pixels per channel

Sequential Code: Forward Convolutional Layer

```
void convLayer_forward(int B, int M, int C, int H, int W, int K,
                       float* X, float* W, float* Y)
{
  int H_out = H – K + 1;                      // calculate H_out, W_out
  int W_out = W – K + 1;

  for (int b = 0; b < B; ++b)                 // for each image
    for(int m = 0;  m < M;  m++)              // for each output feature map
      for(int h = 0; h < H_out; h++)          // for each output value (two loops)
        for(int w = 0; w < W_out; w++) {
          Y[b, m, h, w] = 0.0f;               // initialize sum to 0
          for(int c = 0; c < C; c++)          // sum over all input channels
            for(int p = 0; p < K; p++)        // KxK filter
              for(int q = 0; q < K; q++)
                Y[b, m, h, w] += X[b, c, h + p, w + q] * W[m, c, p, q];
        }
}
```

A Small Convolution Layer Example

Image *b* in mini batch

X[b,0,_, _]

1	2	0	1
1	1	3	2
0	2	2	0
2	1	0	3

1	1	1
2	2	3
2	1	0

W[0,0,_, _]

X[b,1,_, _]

0	2	1	0
0	3	2	1
1	1	0	2
2	1	0	3

1	2	3
1	1	0
3	0	1

W[0,1,_, _]

0	?
?	?

Y[b,0,_, _]

X[b,2,_, _]

1	2	1	0
0	1	3	2
3	3	2	0
1	3	2	0

0	1	1
1	0	2
1	2	1

W[0,2,_, _]

input channel

X[b, 1,_,_]

W[0,1,_, _]

Y[b, 0,_, _]

output map

A Small Convolution Layer Example

X[b,0,_, _]

1	2	0	1
1	1	3	2
0	2	2	0
2	1	0	3

W[0,0,_, _]

1	1	1
2	2	3
2	1	0

3+13+2

X[b,1,_, _]

0	2	1	0
0	3	2	1
1	1	0	2
2	1	0	3

W[0,1,_, _]

1	2	3
1	1	0
3	0	1

18	?
?	?

Y[b,0,_, _]

X[b,2,_, _]

1	2	1	0
0	1	3	2
3	3	2	0
1	3	2	0

W[0,2,_, _]

0	1	1
1	0	2
1	2	1

A Small Convolution Layer Example

X[b,0,_, _]

1	2	0	1
1	1	3	2
0	2	2	0
2	1	0	3

W[0,0,_, _]

1	1	1
2	2	3
2	1	0

… 18+7+3+3

X[b,1,_, _]

0	2	1	0
0	3	2	1
1	1	0	2
2	1	0	3

W[0,1,_, _]

1	2	3
1	1	0
3	0	1

31	?
?	?

Y[b,0,_, _]

X[b,2,_, _]

1	2	1	0
0	1	3	2
3	3	2	0
1	3	2	0

W[0,2,_, _]

0	1	1
1	0	2
1	2	1

A Small Convolution Layer Example

X[b,0,_, _]

1	2	0	1
1	1	3	2
0	2	2	0
2	1	0	3

W[0,0,_, _]

1	1	1
2	2	3
2	1	0

…

31+

3+6+11

X[b,1,_, _]

0	2	1	0
0	3	2	1
1	1	0	2
2	1	0	3

W[0,1,_, _]

1	2	3
1	1	0
3	0	1

Y[b,0,_, _]

51	?
?	?

X[b,2,_, _]

1	2	1	0
0	1	3	2
3	3	2	0
1	3	2	0

W[0,2,_, _]

0	1	1
1	0	2
1	2	1

Parallelism in a Convolution Layer

- **Output feature maps** can be calculated in parallel
  - Usually a small number, not sufficient to fully utilize a GPU
- All **output** feature map **pixels** can be calculated in parallel
  - All rows can be done in parallel
  - All pixels in each row can be done in parallel
  - Large number but diminishes as we go into deeper layers
- All **input feature maps** can be processed in parallel, but need atomic operation or tree reduction (we'll learn later)
- **Different layers may demand different strategies.**

Subsampling (Pooling) by Scale N

Convolution Output Y
B images
M features per image
$H_{out} \times W_{out}$ values per feature

Average over N×N blocks, then calculate sigmoid

Output Size
$H_{S(N)} = \text{floor}\ (H_{out} / N)$
$W_{S(N)} = \text{floor}\ (W_{out} / N)$

Subsampling/Pooling Output S
B images
M features per image
$H_{S(N)} \times W_{S(N)}$ values per feature

Sequential Code: Forward Pooling Layer

```
void poolingLayer_forward(int B, int M, int H_out, int W_out, int N,
                          float* Y, float* S)
{
  for (int b = 0; b < B; ++b)                // for each image
    for (int m = 0;  m < M; ++m)             // for each output feature map
      for (int x = 0; x < H_out/N; ++x)      // for each output value (two loops)
        for (int y = 0; y < W_out/N; ++y) {
          float acc = 0.0f                   // initialize sum to 0
          for (int p = 0; p < N; ++p)        // loop over NxN block of Y (two loops)
             for (int q = 0; q < N; ++q)
                acc += Y[b, m, N*x + p, N*y + q];
          acc /= N * N;                     // calculate average over block
          S[b, m, x, y] = sigmoid(acc + bias[m])  // bias, non-linearity
        }
}
```

Kernel Implementation of Subsampling Layer

- Straightforward mapping from grid to subsampled output feature map pixels
- in GPU kernel,
  - need to manipulate index mapping
  - for accessing the output feature map pixels
  - of the previous convolution layer.
- Often merged into the previous convolution layer to save memory bandwidth

Design of a Basic CNN Kernel

- Each block computes
  - a tile of output pixels for one feature
  - TILE_WIDTH pixels in each dimension
- Grid's X dimension maps to M output feature maps
- Grid's Y dimension maps to the tiles in the output feature maps (linearized order).
- (Grid's Z dimension is used for images in batch, which we omit from slides.)

tiles covering an output feature map, marked with linearized indices

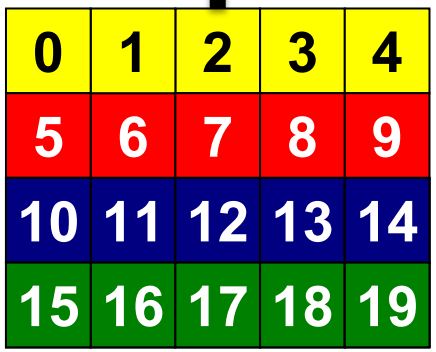

A Small Example

- Assume
  - **M = 4** (4 output feature maps),
  - thus 4 blocks in the X dimension, and
  - **W_out = H_out = 8** (8x8 output features).
- If **TILE_WIDTH = 4**,
  we also need 4 blocks in the Y dimension:
  - for each output feature,
  - top two blocks in each column calculates the top row of tiles, and
  - bottom two calculate the bottom row.

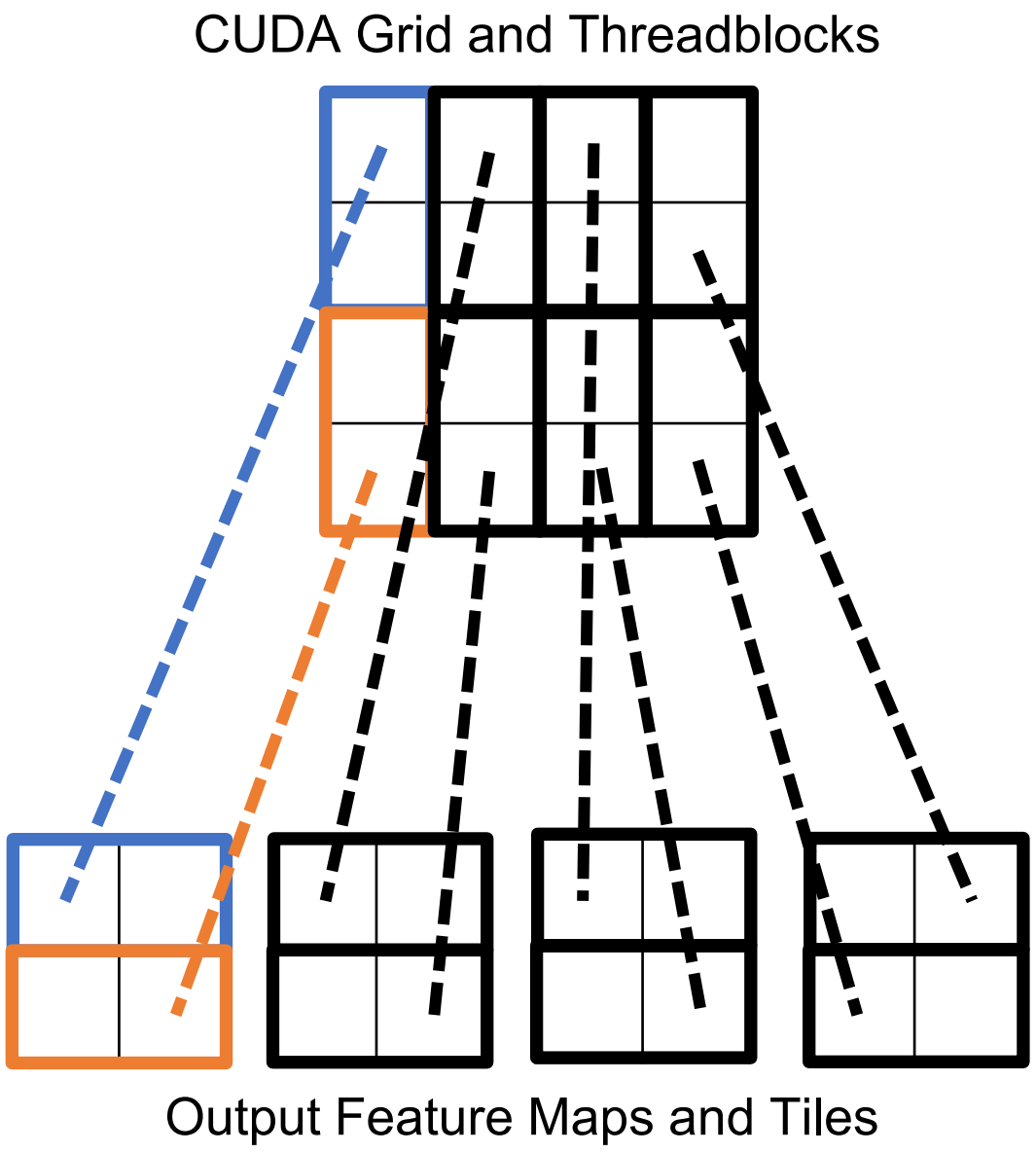

Host Code for a Basic Kernel: CUDA Grid

- Consider an output feature map:
  - width is **W_out**, and
  - height is **H_out**.
  - Assume these are multiples of **TILE_WIDTH**.

0	1	2	3	4
5	6	7	8	9
10	11	12	13	14
15	16	17	18	19

- Let **X_grid** be the number of blocks needed in X dim (5 above).
- Let **Y_grid** be the number of blocks needed in Y dim (4 above).

Host Code for a Basic Kernel: CUDA Grid

- Assuming W_out and H_out are multiples of TILE_WIDTH

```
#define TILE_WIDTH 16            // We will use 4 for small examples.
W_grid = W_out/TILE_WIDTH;       // number of horizontal tiles per output map
H_grid = H_out/TILE_WIDTH;       // number of vertical tiles per output map
Y = H_grid * W_grid;

dim3 blockDim(TILE_WIDTH, TILE_WIDTH, 1); // output tile for untiled code
dim3 gridDim(M, Y, 1);

ConvLayerForward_Kernel<<< gridDim, blockDim >>>(…);
```

Sequential Code: Forward Convolutional Layer

```
void convLayer_forward(int B, int M, int C, int H, int W, int K,
                       float* X, float* W, float* Y)
{
  int H_out = H – K + 1;                    // calculate H_out, W_out
  int W_out = W – K + 1;

  for (int b = 0; b < B; ++b)               // for each image
    for (int m = 0;  m < M;  m++)            // for each output feature map
      for (int h = 0; h < H_out; h++)        // for each output value (two loops)
        for (int w = 0; w < W_out; w++) {
          Y[b, m, h, w] = 0.0f;             // initialize sum to 0
          for (int c = 0; c < C; c++)       // sum over all input channels
            for (int p = 0; p < K; p++)     // KxK filter
              for (int q = 0; q < K; q++)
                Y[b, m, h, w] += X[b, c, h + p, w + q] * W[m, c, p, q];
        }
}
```

Computed by the grid

Computed by a thread

Partial Kernel Code for a Convolution Layer

```
__global__ void ConvLayerForward_Basic_Kernel
                (int C, int W_grid, int K, float* X, float* W, float* Y)
{
    int m = blockIdx.x;
    int h = (blockIdx.y / W_grid) * TILE_WIDTH + threadIdx.y;
    int w = (blockIdx.y % W_grid) * TILE_WIDTH + threadIdx.x;
    float acc = 0.0f;
    for (int c = 0;  c < C; c++) {            // sum over all input channels
       for (int p = 0; p < K; p++)            // loop over KxK filter
          for (int q = 0; q < K; q++)
             acc += X[c, h + p, w + q] * W[m, c, p, q];
    }
    Y[m, h, w] = acc;
}
```

- Image batch is omitted

Some Observations

- **Enough parallelism**
  - if the total number of pixels
  - across all output feature maps is large
  - (often the case for CNN layers)
- Each input tile
  - loaded M times (number of output features), so
  - **not efficient in global memory bandwidth,**
  - but block scheduling in X dimension should give cache benefits.

Implementing a Convolution Layer with Matrix Multiplication

- Convolution can be reformulated as a matrix multiplication.
  - Filters are arranged as one matrix.
  - Input feature maps are transformed into another matrix.
    - The input features must be "unrolled" (im2col) in a specific order so that the convolution operation becomes equivalent to a matrix-matrix multiplication.

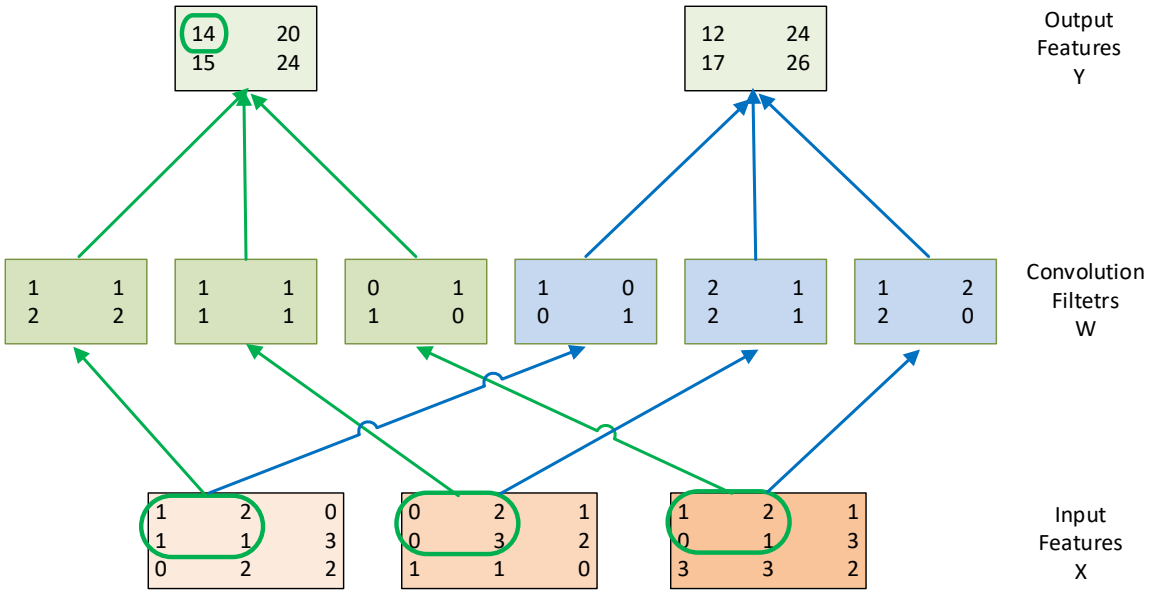

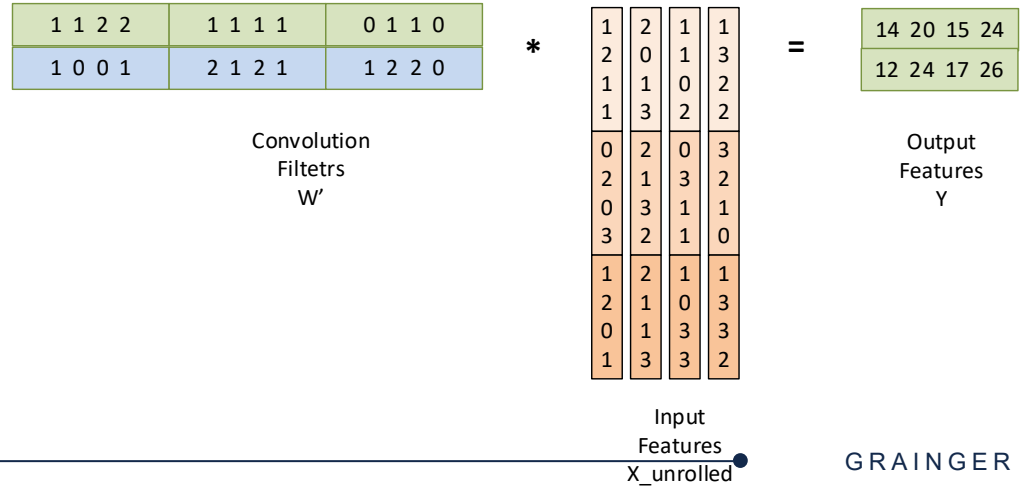

Simple Matrix Multiplication

- Each product matrix element is an output feature map pixel.
- This inner product generates element 0 of output feature map 0.
- Tiled matrix multiplication can be used to improve overall computational efficiency.

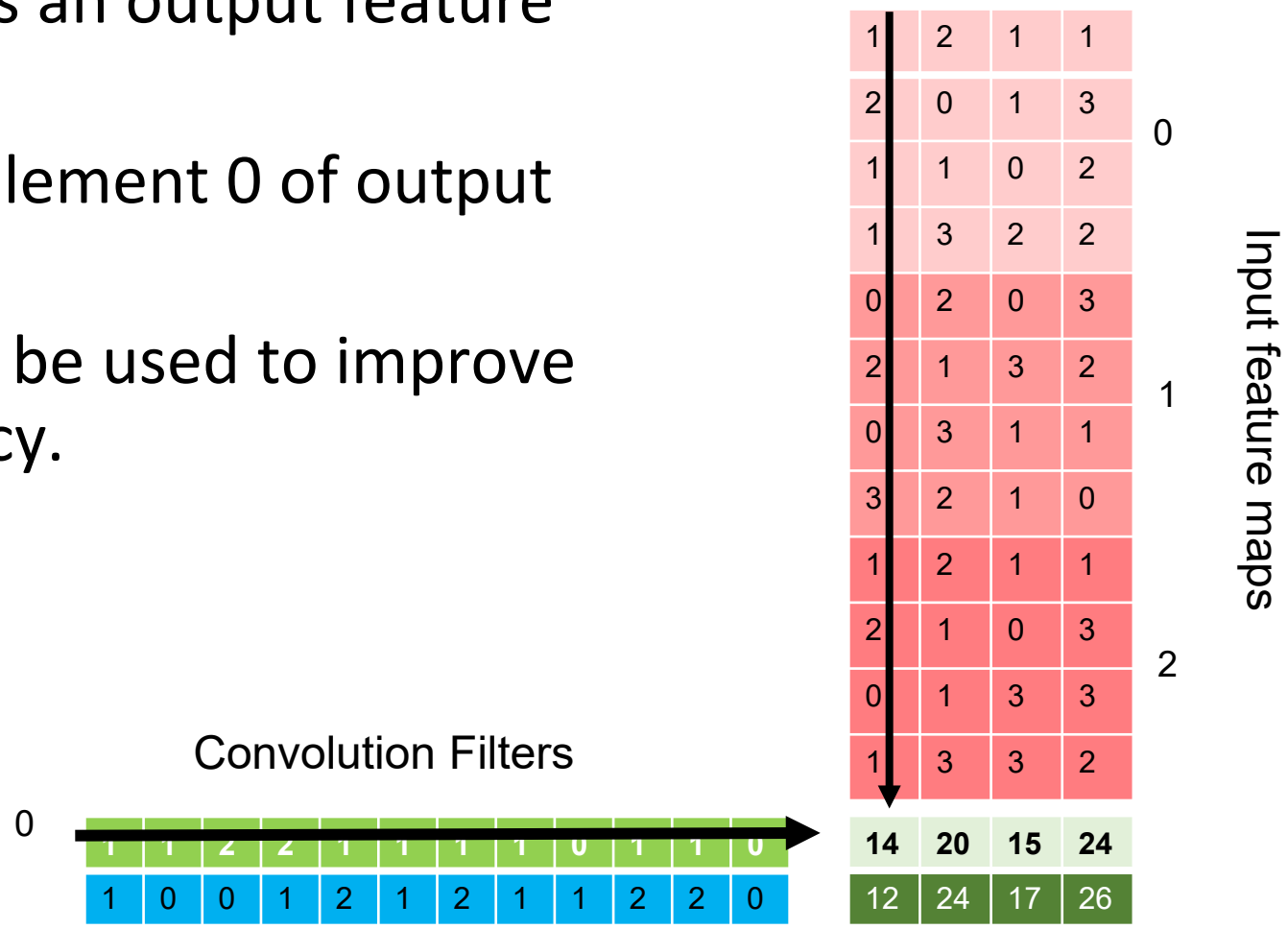

Efficiency Analysis: Total Input Replication

- Replicated input features are shared among output maps
  - There are H_out * W_out output feature map elements
  - Each requires K*K elements from the input feature maps
  - So, the total number of input element after replication is H_out*W_out*K*K times for each input feature map
  - The total number of elements in each original input feature map is (H_out+K-1) * (W*out+K-1)

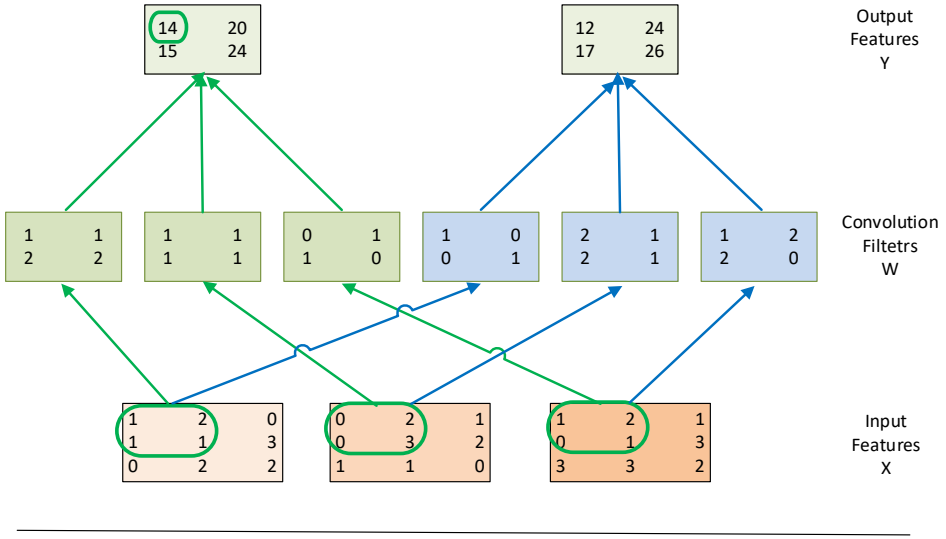

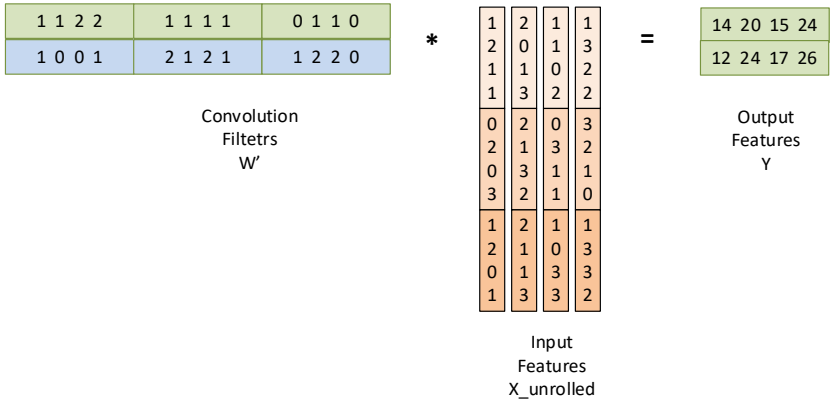

Analysis of a Small Example

- Dimensions
  - H_out = 2
  - W_out = 2
  - K = 2
- There are 3 input maps (channels)
- The total number of input elements in the replicated ("unrolled") input matrix is 3*2*2*2*2
- The replicating factor is
  - (3*2*2*2*2)/(3*3*3) = 1.78

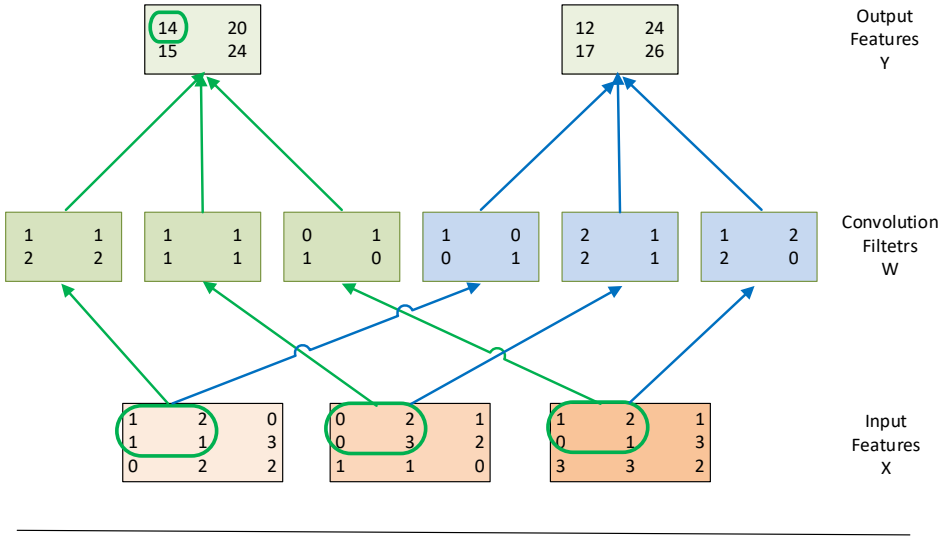

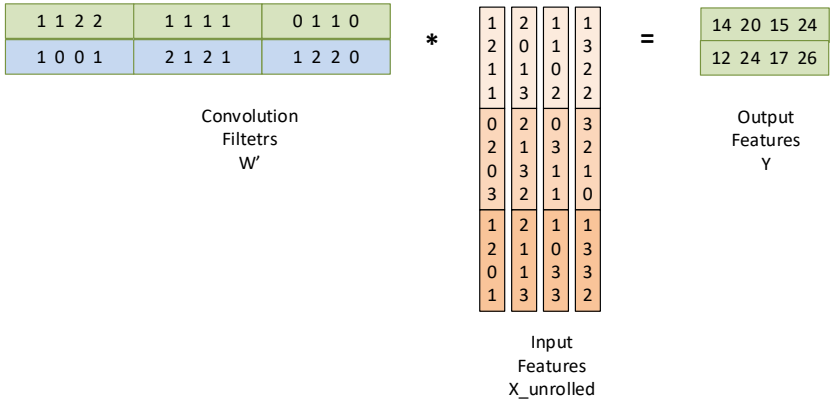

Memory Access Efficiency of Original Convolution Algorithm

- Assume that we use tiled 2D convolution
- For input elements
  - Each output tile has $TILE_WIDTH^2$ elements
  - Each input tile has $(TILE_WIDTH+K-1)^2$
  - The total number of input feature map element accesses was $TILE_WIDTH^2*K^2$
  - The reduction factor of the tiled algorithm is $K^2*TILE_WIDTH^2/(TILE_WIDTH+K-1)^2$
- The convolution filter weight elements are reused within each output tile

Properties of the Unrolled Matrix

- Each unrolled column corresponds to an output feature map element
- For an output feature element (h,w), the index for the unrolled column is h*W_out+w (linearized index of the output feature map element)

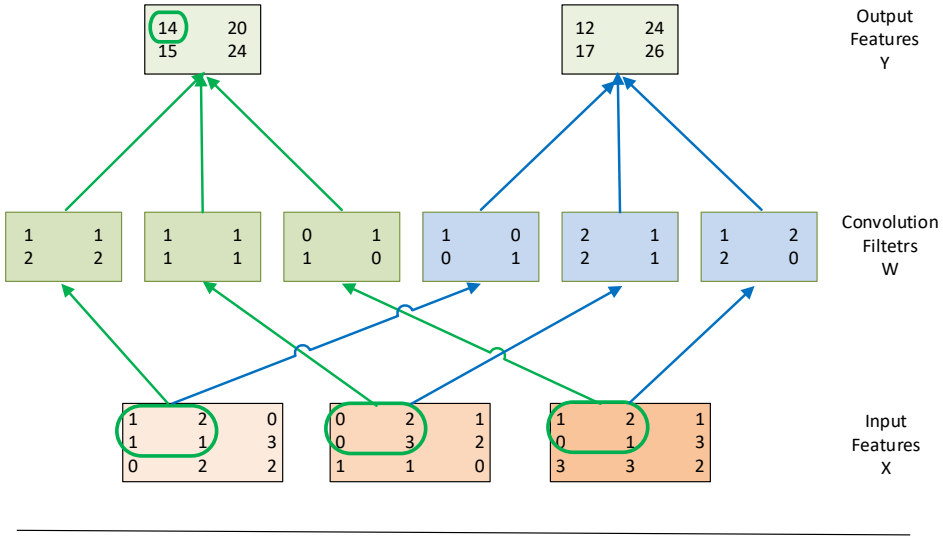

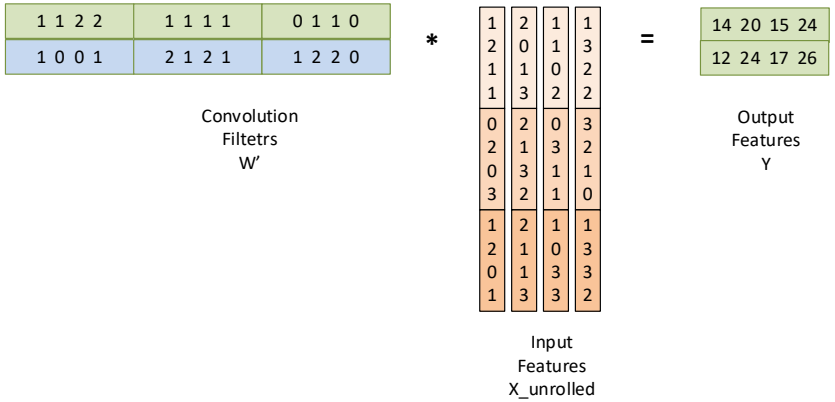

Properties of the Unrolled Matrix (cont.)

- Each section of the unrolled column corresponds to an input feature map
- Each section of the unrolled column has k*k elements (convolution mask size)
- For an input feature map c, the vertical index of its section in the unrolled column is c*k*k (linearized index of the output feature map element)

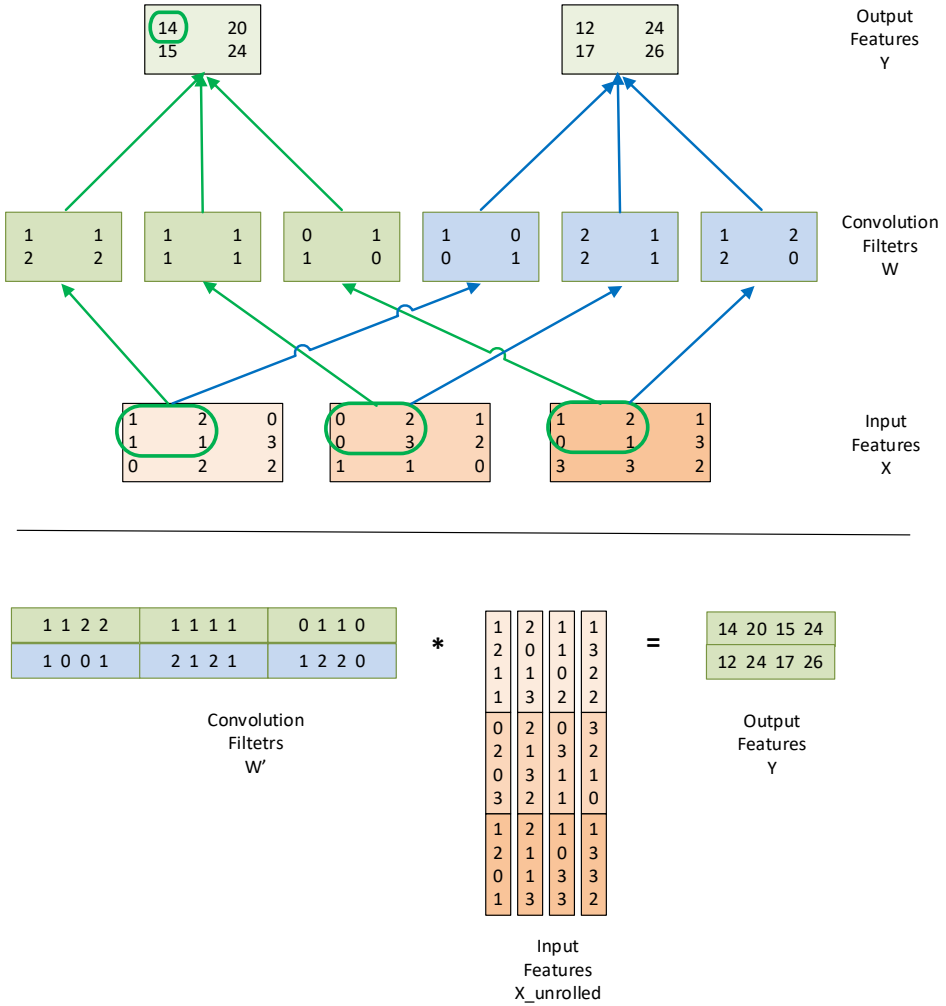

To Find the Input Elements

- For output element (h,w), the base index for the upper left corner of the input feature map c is (c, h, w)
- The input element index for multiplication with the convolution mask element (p, q) is (c, h+p, w+q)

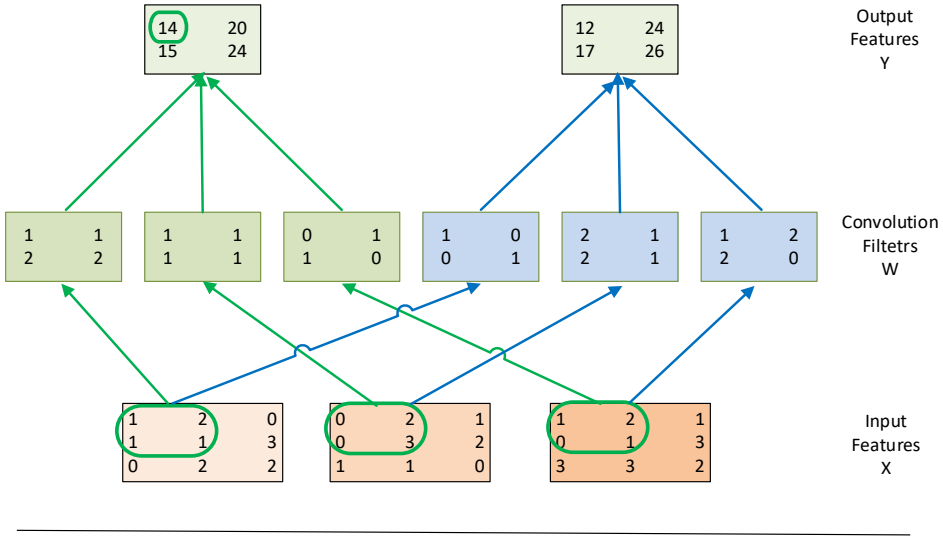

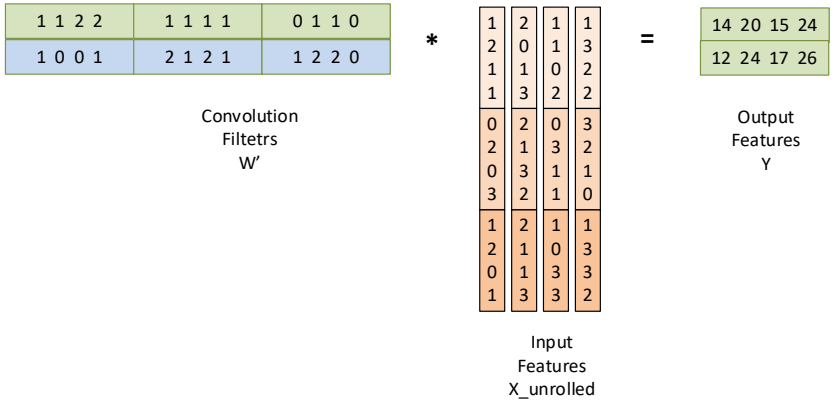

Input to Unrolled Matrix Mapping

```
Output element (h, w)
Mask element (p, q)
Input feature map c
```

```
// calculate the horizontal matrix index
int w_unroll = h * W_out + w;

// find the beginning of the unrolled
int w_base = c * (K*K);

// calculate the vertical matrix index
int h_unroll = w_base + p * K + q;

X_unroll[b, h_unroll, w_unroll] = X[b, c, h + p, w + q];
```

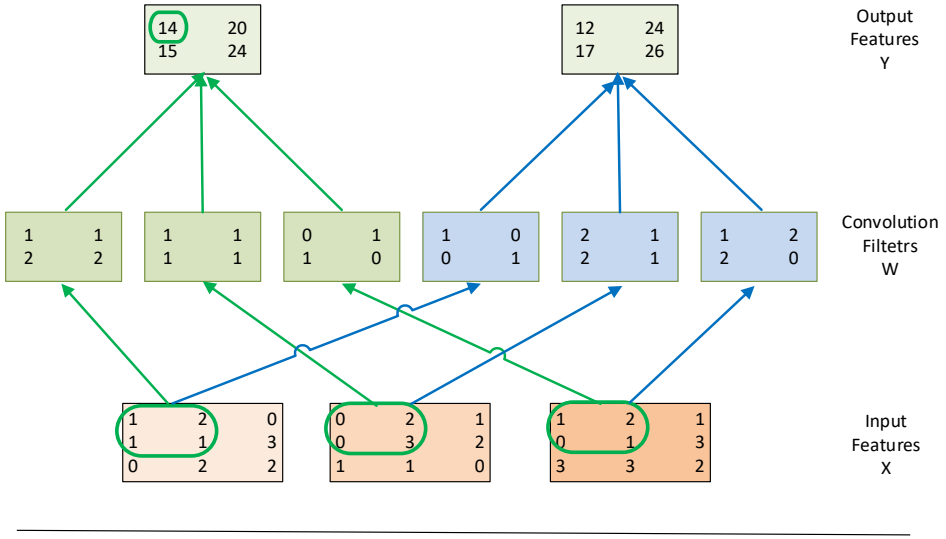

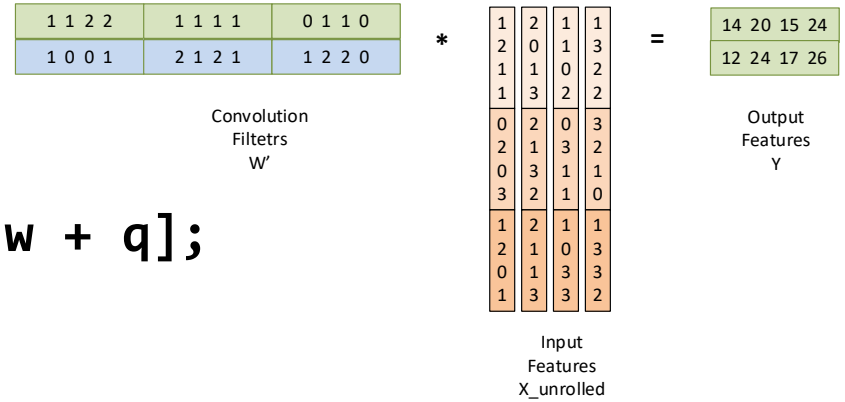

Function to generate “unrolled” X

```
void unroll(int B, int C, int H, int W, int K, float* X, float* X_unroll)
{
  int H_out = H – K + 1;                          // calculate H_out, W_out
  int W_out = W – K + 1;
  for (int b = 0; b < B; ++b)                     // for each image
    for (int c = 0; c < C; ++c) {                 // for each input channel
      int w_base = c * (K*K);                     // per-channel offset for smallest X_unroll index
      for (int p = 0; p < K; ++p)                 // for each element of KxK filter (two loops)
        for (int q = 0; q < K; ++q) {
          for (int h = 0; h <  H_out; ++h)        // for each thread (each output value, two loops)
            for (int w = 0; w < W_out; ++w) {
              int h_unroll = w_base + p * K + q;  // data needed by one thread
              int w_unroll = h * W_out + w;       // smallest index--across threads (output values)
              X_unroll[b, h_unroll, w_unroll] = X[b, c, h + p, w + q];     // copy input pixels
            }
    }
}
```

Implementation Strategies for a Convolution Layer

- Baseline
  - Tiled 2D convolution implementation, use constant memory for convolution masks
- Matrix-Multiplication Baseline
  - Input feature map unrolling kernel, constant memory for convolution masks as an optimization
  - Tiled matrix multiplication kernel
- Matrix-Multiplication with built-in unrolling
  - Perform unrolling only when loading a tile for matrix multiplication
  - The unrolled matrix is only conceptual
  - When loading a tile element of the conceptual unrolled matrix into the shared memory, use the properties in the lecture to load from the input feature map
- More advanced Matrix-Multiplication
  - Use joint register-shared memory tiling

Transformer-based Language Models

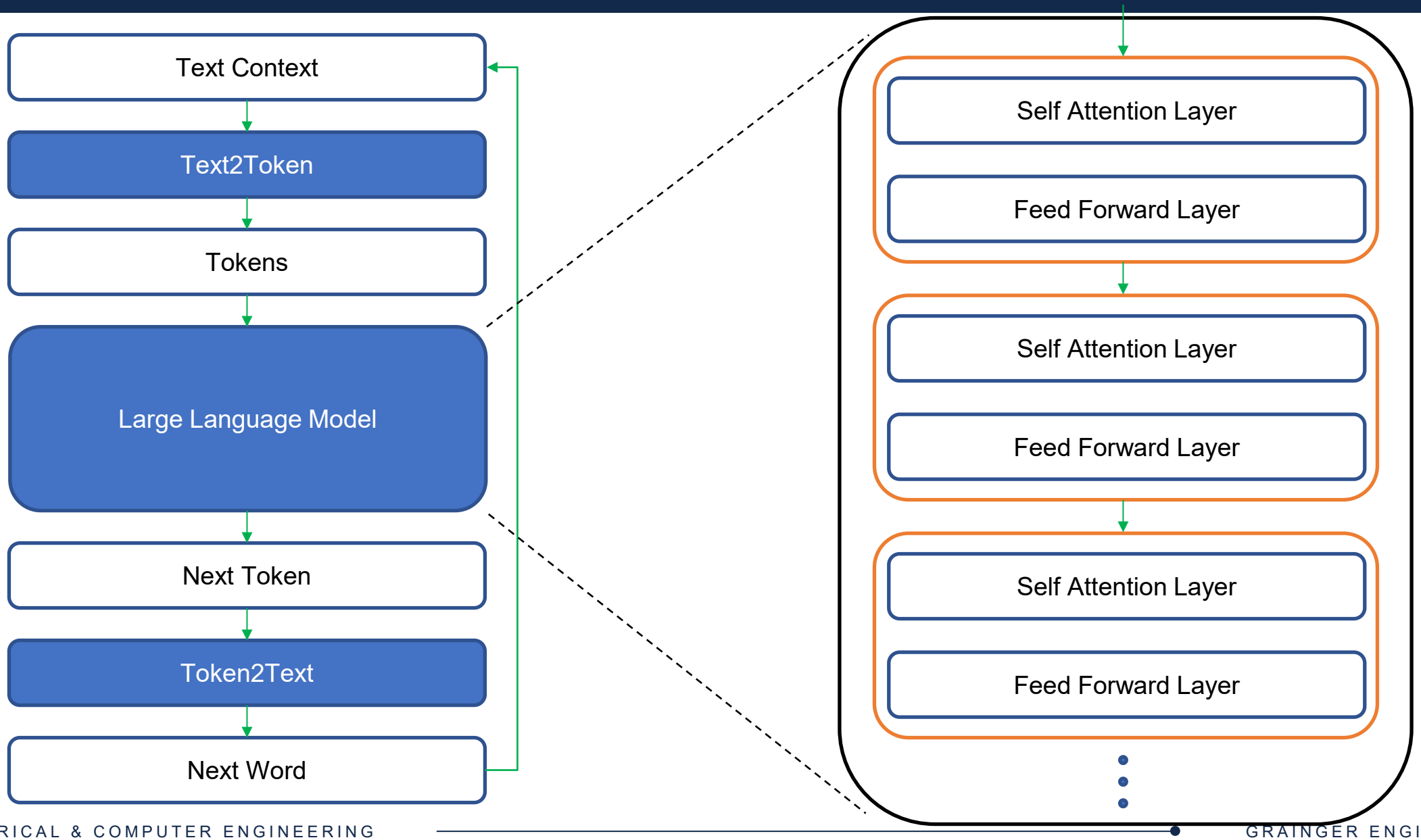

Single Layer Computational Flow

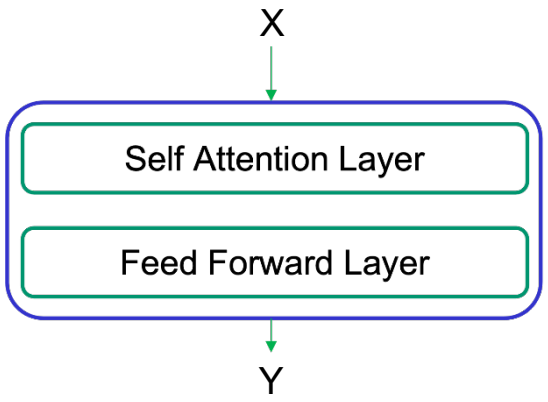

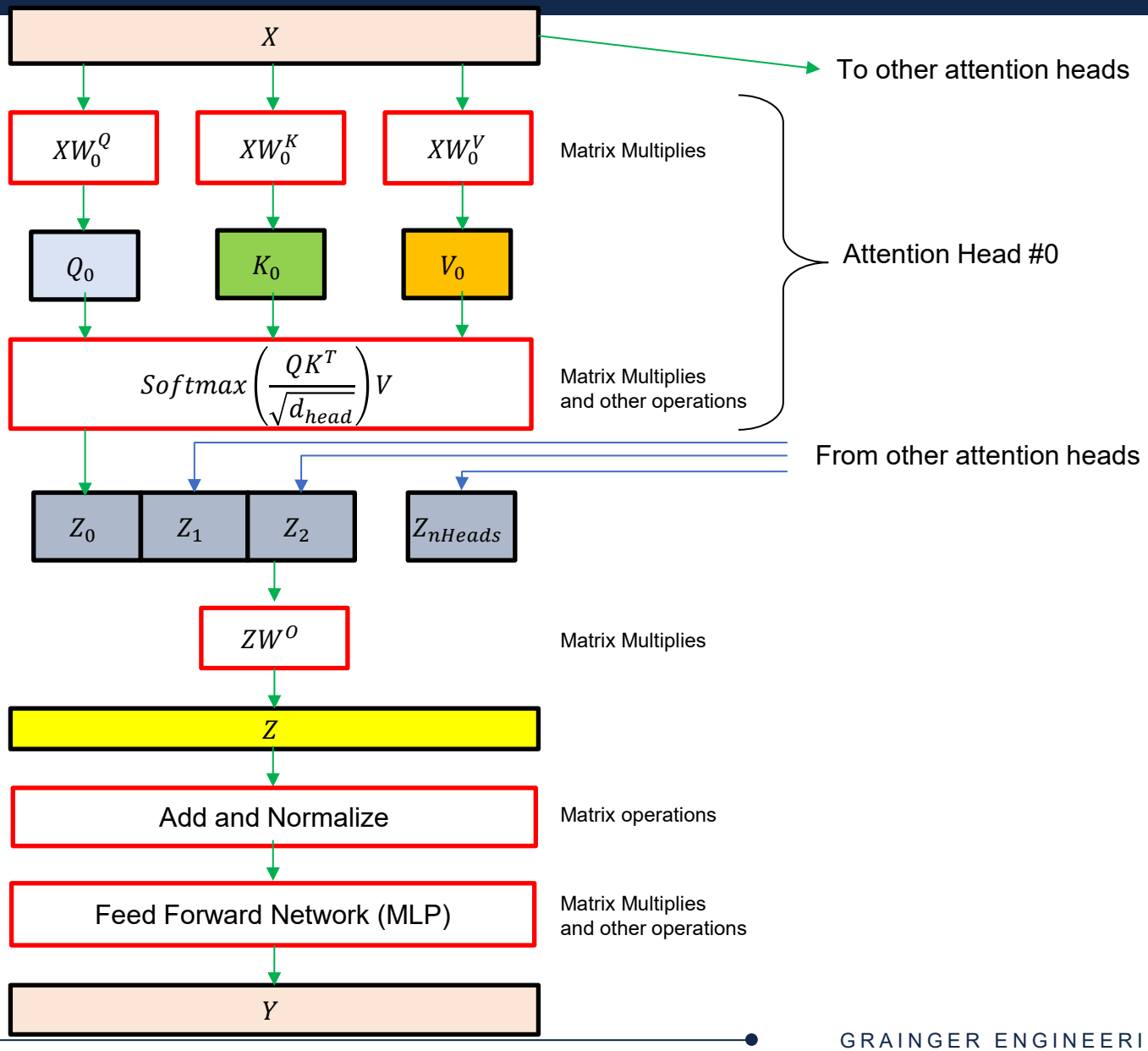

GPT-3 As an Example

Language Models are Few-Shot Learners, Brown et al., OpenAI, July 2020

Model Name	n_{params}	n_{layers}	d_{model}	n_{heads}	d_{head}	Batch Size	Learning Rate
GPT-3 Small	125M	12	768	12	64	0.5M	6.0×10^{-4}
GPT-3 Medium	350M	24	1024	16	64	0.5M	3.0×10^{-4}
GPT-3 Large	760M	24	1536	16	96	0.5M	2.5×10^{-4}
GPT-3 XL	1.3B	24	2048	24	128	1M	2.0×10^{-4}
GPT-3 2.7B	2.7B	32	2560	32	80	1M	1.6×10^{-4}
GPT-3 6.7B	6.7B	32	4096	32	128	2M	1.2×10^{-4}
GPT-3 13B	13.0B	40	5140	40	128	2M	1.0×10^{-4}
GPT-3 175B or "GPT-3"	175.0B	96	12288	96	128	3.2M	0.6×10^{-4}

Table 2.1: Sizes, architectures, and learning hyper-parameters (batch size in tokens and learning rate) of the models which we trained. All models were trained for a total of 300 billion tokens.

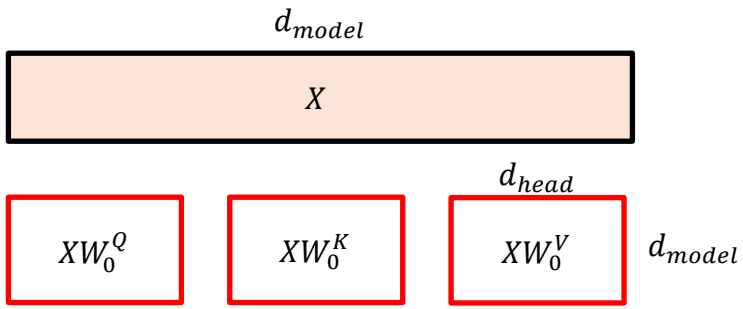

In GPT-3, each W is 12288x128 matrix, 1.5M parameters, 3MB (@ 16 bit floats), or 6 MFlop per X vector

There are 96x3 of these for a total of 432M parameters, 864MB (@ 16 bit floats), or 1.7 GFlop per X vector

GPT-3 has 96 Layers, 55B parameters just from Self Attention. 220 Gflop per X vector, per output token.

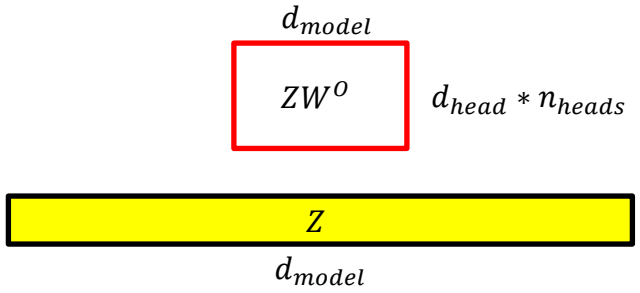

W^o is 12288x12288 matrix, 150M parameters, 300MB (@ 16 bit floats), or 600 MFlop per X vector

Any More Questions?

Things to Read:
Textbook chapter 16

Things to Do:
Project Checkpoint 1
Prepare for the Midterm 1

Problem Solving

- Q: Consider a 3D video filtering (convolution) code in CUDA with a 5x5x7 mask, which is stored in constant memory. Shared memory is used to fully store the input tile required for an 16x16x16 output tile (for example, using strategy 2). What is the ratio of total global memory read operations to shared memory accesses for one output tile? For this question, only consider interior tiles with no ghost elements.
- A:
  - 20*20*22 to 5*5*7*16*16*16

Problem Solving

- Q: Consider a convolutional neural network that takes 100x200 images with 3 color channels (red, green, blue). The first layer of this network generates 10 output feature maps using 9x9 filters, where all channels are combined in each output feature map. Assuming all convolutions are performed in floating point, and considering only the convolutional layer (e.g., no pooling, thresholding, non-linearity, etc.), how many floating-point operations (both multiplications and additions) are required to generate all the output feature maps in a single forward pass? Remember: output feature maps are smaller than input maps because only pixels without ghost elements are generated.
- A:

  10 (output feature maps)

  * 92*192 (total # of pixels to compute in each output feature map)

  * 9*9 (conv. filter size)

  * 3 (color channels)

  * 2 (multiply-add operations)