Power

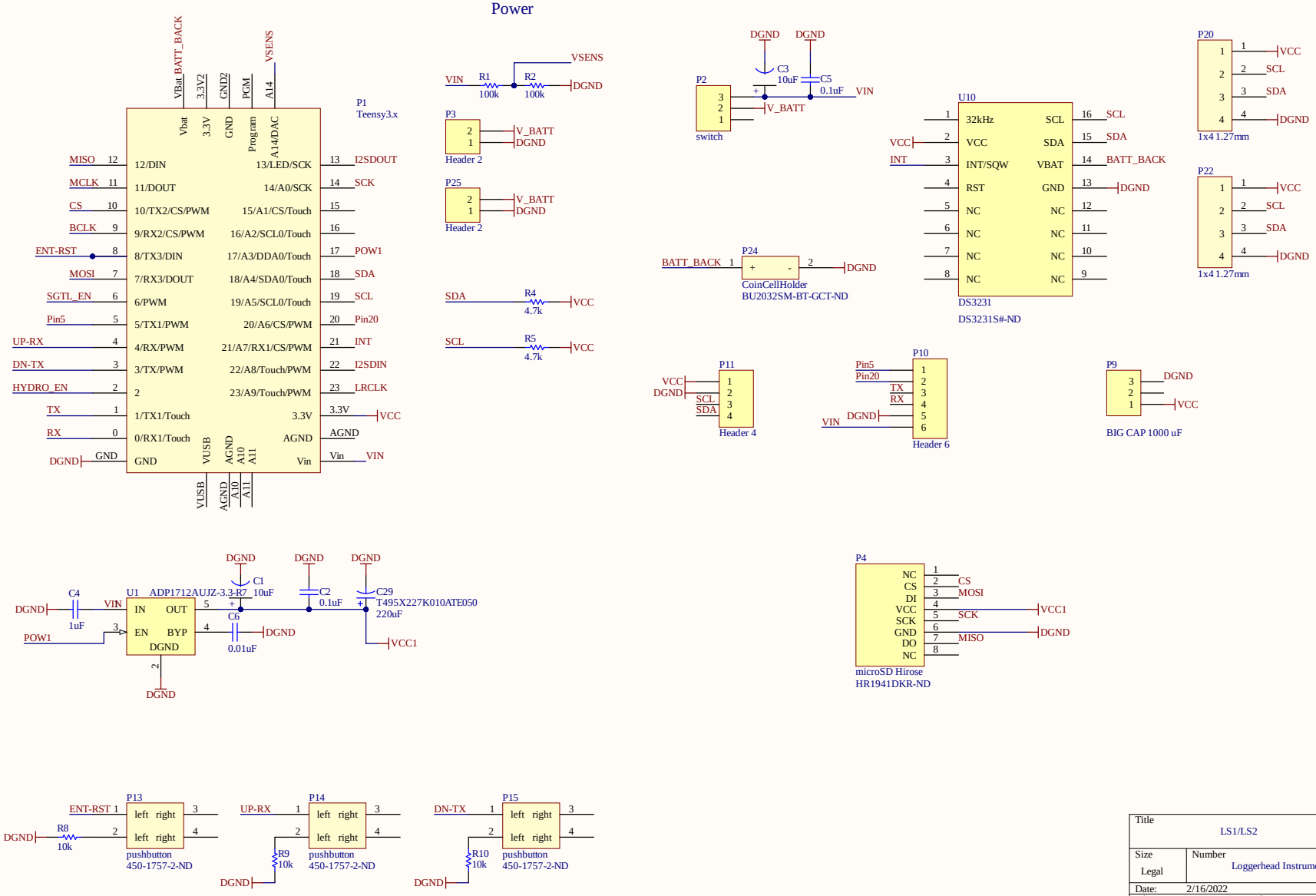

Title	LS1/LS2		
Size: Legal	Number: Loggerhead Instruments		Revision: 3.0
Date: 2/16/2022		Sheet bf 2	
File: C:\w\HS1-HS2\Altium\HS1-HS2.SchDoc		Drawn By: D. Mann	

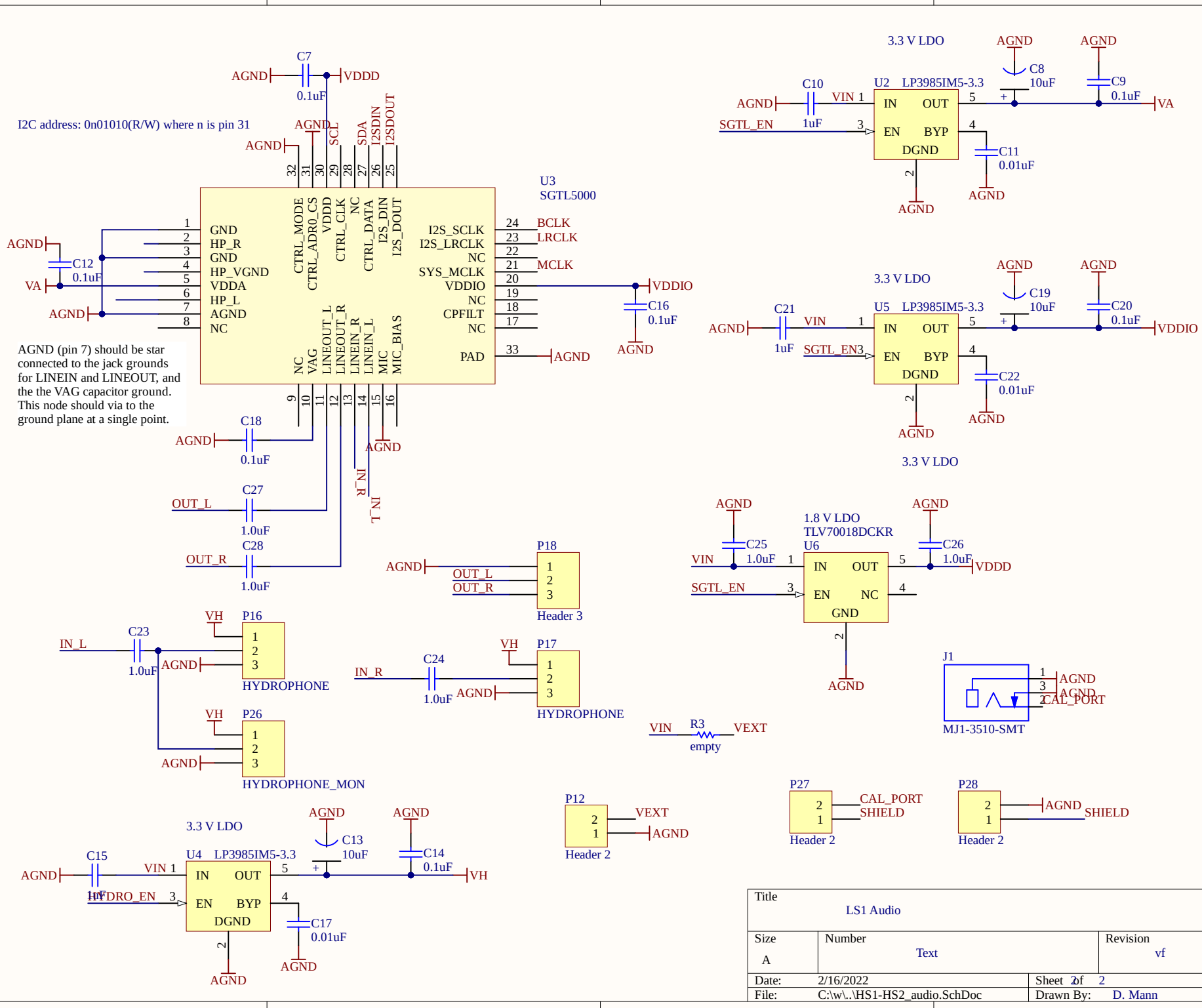
I2C address: 0n01010(R/W) where n is pin 31
AGND (pin 7) should be star connected to the jack grounds for LINEIN and LINEOUT, and the the VAG capacitor ground. This node should via to the ground plane at a single point.
U3
SGTL5000
GND
HP_R
HP_VGND
VDDA
HP_L
AGND
NC
CTRL_MODE
CTRL_ADR0_CS
VDDD
CTRL_CLK
NC
CTRL_DATA
I2S_DIN
I2S_DOUT
I2S_SCLK
I2S_LRCLK
NC
SYS_MCLK
VDDIO
NC
CPFILT
NC
PAD
BCLK
LRCLK
MCLK
NC
VAG
LINEOUT_L
LINEOUT_R
LINEIN_R
LINEIN_L
MIC
MIC_BIAS
3.3 V LDO
U2 LP3985IM5-3.3
3.3 V LDO
U5 LP3985IM5-3.3
3.3 V LDO
U4 LP3985IM5-3.3
1.8 V LDO
TLV70018DCKR
U6
HYDROPHONE
HYDROPHONE
HYDROPHONE_MON
Header 3
Header 2
Header 2
Header 2
MJ1-3510-SMT
empty
Title
LS1 Audio
Size
A
Number
Text
Revision
vf
Date: 2/16/2022
File: C:\w\..\HS1-HS2_audio.SchDoc
Sheet 2 of 2
Drawn By: D. Mann

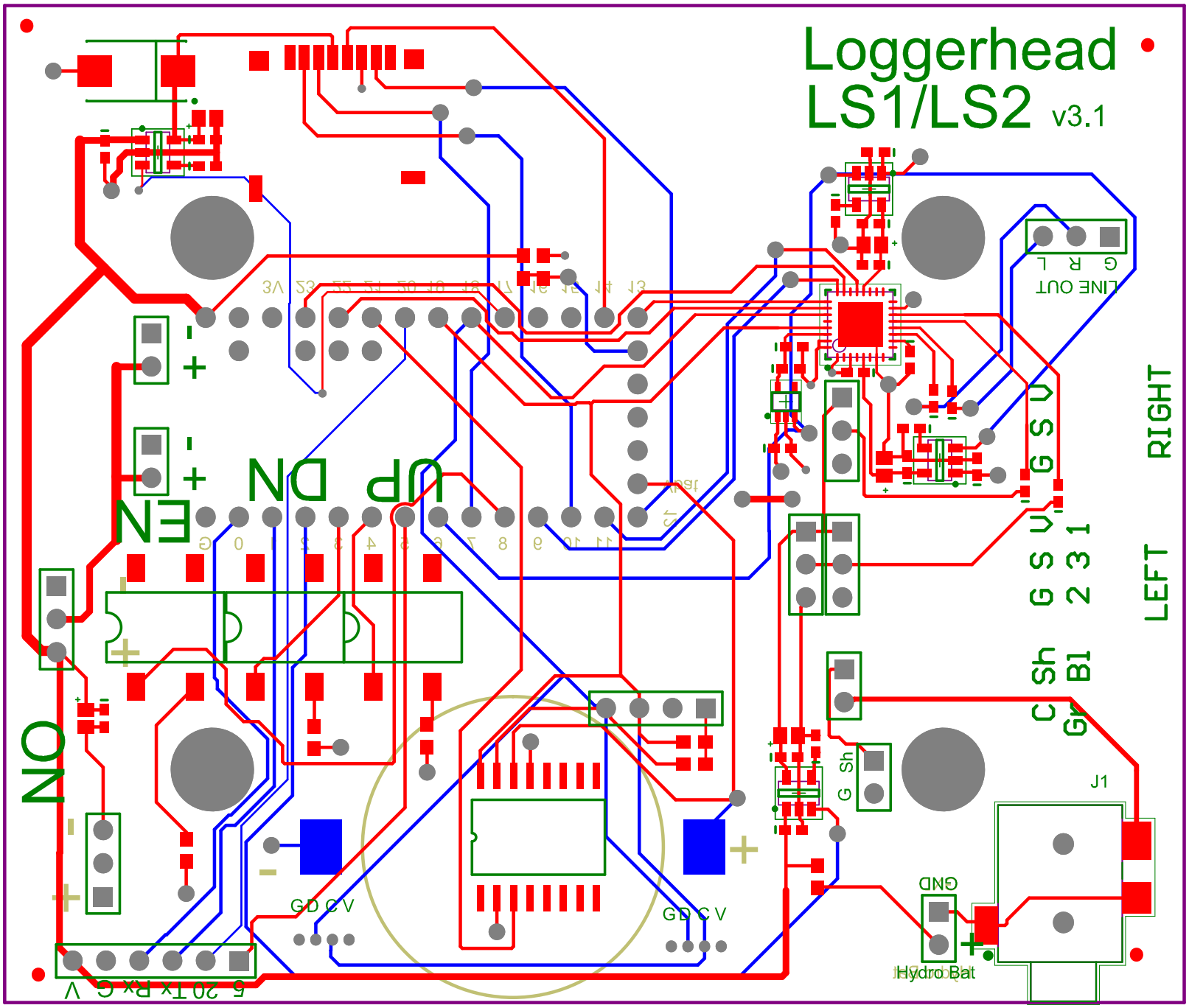
Loggerhead
LS1/LS2 v3.1
RIGHT
LEFT
LINE OUT
G R L
G S V
G S V
2 3 1
C Sh
Gr B1
G Sh
J1
GND
Hydro Bat
GD C V
GD C V
UP DN
EN
ON

Board Stack Report