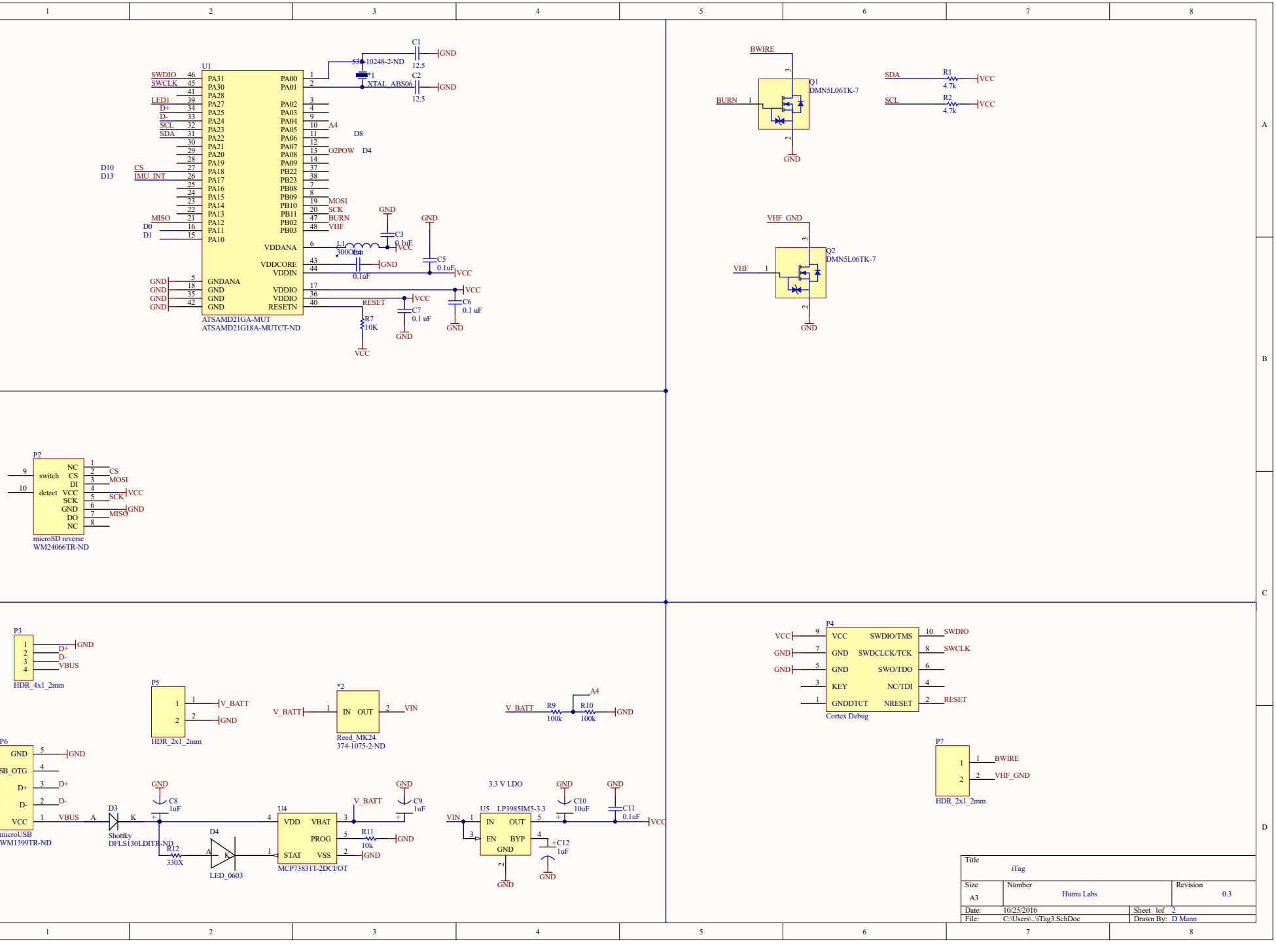
U1
ATSAMD21GA-MUT
ATSAMD21G18A-MUTCT-ND
SWDIO
SWCLK
LED1
D+
D-
SCL
SDA
CS
IMU_INT
MISO
D0
D1
D10
D13
PA31
PA30
PA28
PA27
PA25
PA24
PA23
PA22
PA21
PA20
PA19
PA18
PA17
PA16
PA15
PA14
PA13
PA12
PA11
PA10
GNDANA
GND
PA00
PA01
PA02
PA03
PA04
PA05
PA06
PA07
PA08
PA09
PB22
PB23
PB08
PB09
PB10
PB11
PB02
PB03
VDDANA
VDDCORE
VDDIN
VDDIO
RESETN
A4
D8
O2POW
D4
MOSI
SCK
BURN
VHF
C1
12.5
C2
12.5
10248-2-ND
XTAL_ABS06
C3
0.1uF
L1
300Ohm
C5
0.1uF
C6
0.1 uF
C7
0.1 uF
R7
10K
RESET
VCC
GND
BWIRE
Q1
DMN5L06TK-7
SDA
SCL
R1
4.7k
R2
4.7k
VHF_GND
Q2
DMN5L06TK-7
P2
microSD reverse
WM24066TR-ND
switch
detect
NC
CS
DI
VCC
SCK
GND
DO
NC
MOSI
MISO
P3
HDR_4x1_2mm
VBUS
P5
HDR_2x1_2mm
V_BATT
*2
Reed_MK24
374-1075-2-ND
IN
OUT
VIN
R9
100k
R10
100k
P6
microUSB
WM1399TR-ND
USB_OTG
D3
Shottky
DFLS130LDITR-ND
C8
1uF
R12
330X
D4
LED_0603
U4
MCP73831T-2DCI/OT
VDD
VBAT
PROG
STAT
VSS
C9
1uF
R11
10k
3.3 V LDO
U5
LP3985IM5-3.3
EN
BYP
C10
10uF
C11
0.1uF
C12
1uF
P4
Cortex Debug
SWDIO/TMS
SWDCLCK/TCK
SWO/TDO
NC/TDI
NRESET
KEY
GNDDTCT
P7
HDR_2x1_2mm
Title
iTag
Size
A3
Number
Humu Labs
Revision
0.3
Date: 10/25/2016
Sheet 1of 2
File: C:\Users\..\iTag3.SchDoc
Drawn By: D Mann

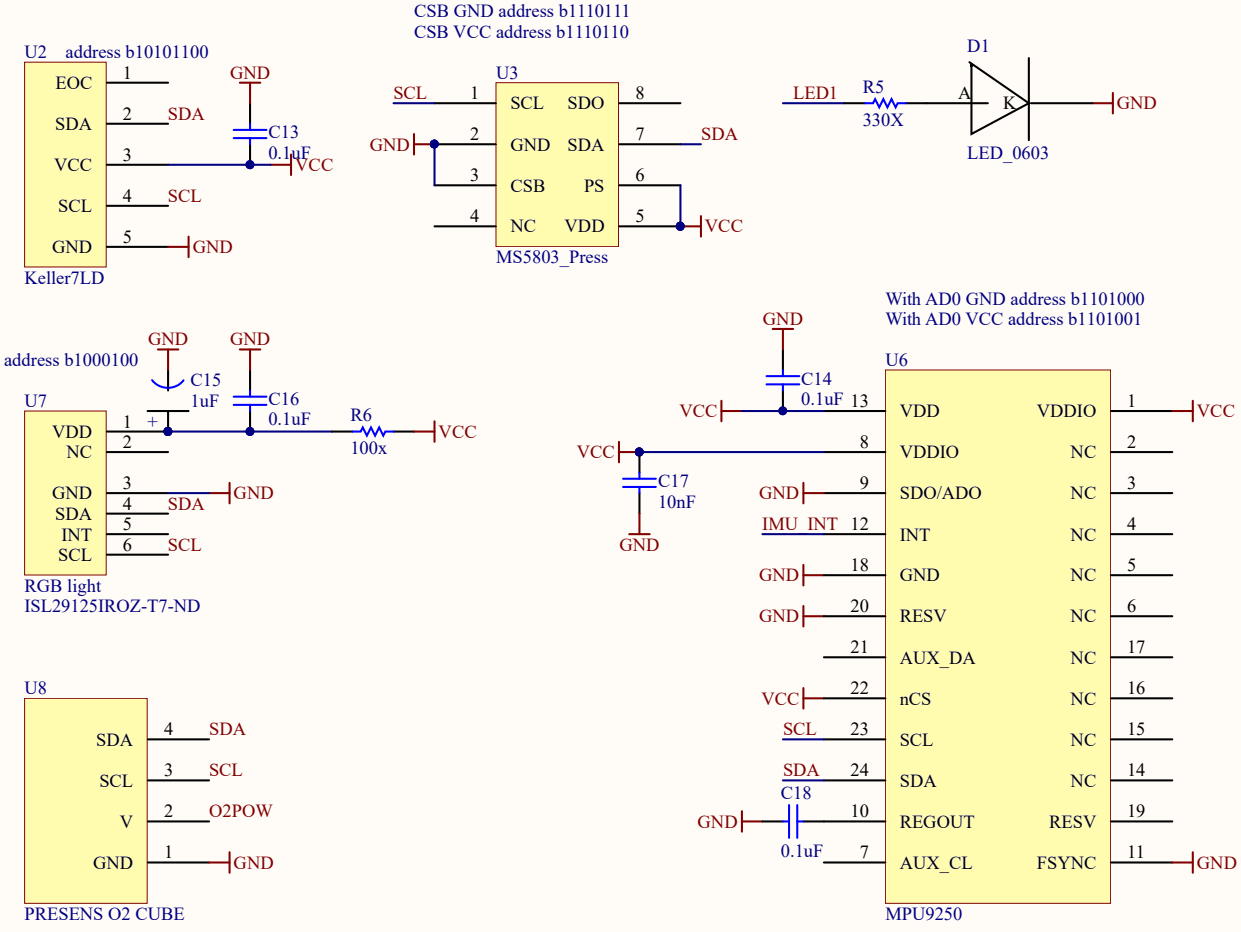

Title: iTag		
Size: A	Number: Humu Labs	Revision: 0.3
Date: 10/25/2016		Sheet 2of 2
File: C:\Users\..\iTag3Sensors2.SchDoc		Drawn By: D Mann

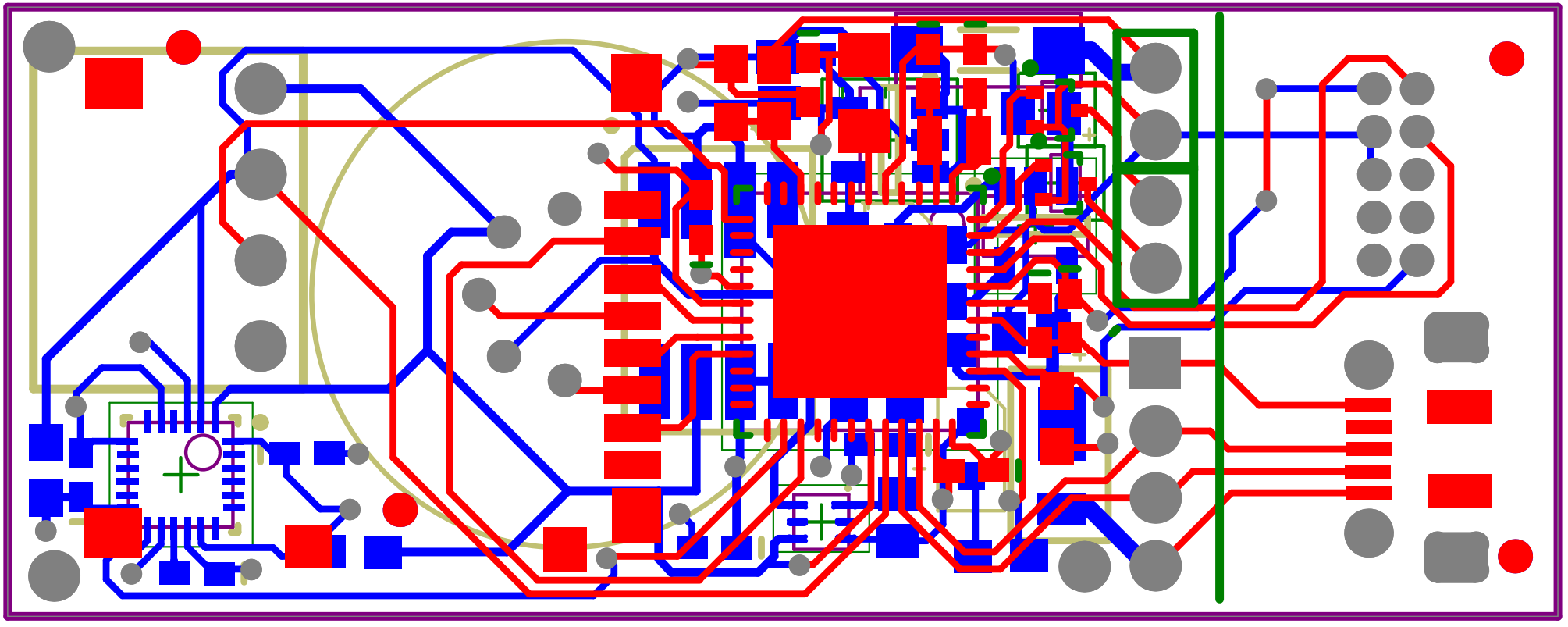

Comment	Description	Designator	Footprint	LibRef	Quantity
XTAL_ABS06		*1	XTAL-ABS06	XTAL_ABS06	1
Reed_MK24		*2	Reed MK24-B-3	Reed_MK24	1
12.5	Ceramic Chip Capacitor - Standard	C1, C2	0402	C0402	2
0.1uF	Ceramic Chip Capacitor - Standard	C3, C4, C5, C11, C13, C14, C16, C18	0402	C0402	8
0.1 uF	Ceramic Chip Capacitor - Standard	C6, C7	0402	C0402	2
1uF		C8, C9, C12, C15	Tant0805	Tant0805	4
10uF		C10	Tant0805	Tant0805	1
10nF	Ceramic Chip Capacitor - Standard	C17	0402	C0402	1
LED_0603		D1, D4	Diode0603	LED_0603	2
Shottky		D3	DFLS130	DFLS130	1
300Ohm	Ferrite 25mOhm@DC, 60 Ohm@100MHz	L1	0805 (M2125) Ferrite	Ferrite 0805(M2125) 3A	1
microSD reverse		P2	miroSD_reverse	microSD reverse	1
HDR_4x1_2mm		P3	Hdr_4x1_2mm	HDR_4x1_2mm	1
Cortex Debug		P4	Header_2x5_50mil	CortexDebug	1
HDR_2x1_2mm		P5, P7	HDR_2x1_2mm	HDR_2x1_2mm	2
microUSB		P6	microUSB-B	microUSB-B	1
DMN5L06TK-7	Ultra-low leakage Enhanced MOSFET	Q1, Q2	SOT-523	FET DMN5L06TK-7	2
4.7k	Precision Thick Film Chip Resistor, 10 Ohm to 1M Ohm Range, 1% and 0.5% Tolerance, 0603 Size, 0.063 W	R1, R2	3-0603	ERJ3RK	2
330X	Precision Thick Film Chip Resistor, 10 Ohm to 1M Ohm Range, 1% and 0.5% Tolerance, 0603 Size, 0.063 W	R5, R12	3-0603	ERJ3RK	2
100x	Precision Thick Film Chip Resistor, 10 Ohm to 1M Ohm Range, 1% and 0.5% Tolerance, 0603 Size, 0.063 W	R6	3-0603	ERJ3RK	1
10K	Precision Thick Film Chip Resistor, 10 Ohm to 1M Ohm Range, 1% and 0.5% Tolerance, 0603 Size, 0.063 W	R7, R11	3-0603	ERJ3RK	2
100k	Precision Thick Film Chip Resistor, 10 Ohm to 1M Ohm Range, 1% and 0.5% Tolerance, 0603 Size, 0.063 W	R9, R10	3-0603	ERJ3RK	2
ATSAMD21GA-MUT		U1	QFN127P600-8N	ATSAMD21G18	1
Keller7LD	Keller Pressure/Temp	U2	Keller7LD	Keller 7LD	1
MS5803_Press		U3	MS5803_Press	MS5803_Press	1
MCP73831T-2DCI/OT	Miniature Single-Cell, Fully Integrated Li-Ion, Li-Polymer Charge Management Controller, 4.2V, 5-Pin SOT-23, Industrial Temperature, Tape and Reel	U4	SOT-23-OT5_N	MCP73831T-2DCI/OT	1
LP3985IM5-3.3	Micropower, 150mA Low-Noise Ultra Low-Dropout CMOS Voltage Regulator, 5-pin SOT-23	U5	MF05A_N	LP3985IM5-3.3	1
MPU9250	Invensense	U6	MPU6500	MPU-9250	1
RGB light	RGB light sensor	U7	ODFN	ISL29125	1
PRESENS O2 CUBE		U8	PRESENS_O2	PRESENS_O2	1