Power

POWER SUPPLY UNIT

File: Power.kicad_sch

T20

FPGA

File: T20.kicad_sch

interfaces&protections

INTERFACES & PROTECTION

File: interfaces&protections.kicad_sch

Pier Francesco Maria Santi
LOGITILES by Hexcape

Sheet: /
File: HEXBERRY-V-20Q100.kicad_sch

Title: HEXBERRY-V-20Q100

Size: A3	Date: 2024-09-19	**Rev: 1.0**
KiCad E.D.A. 8.0.5		Id: 1/4

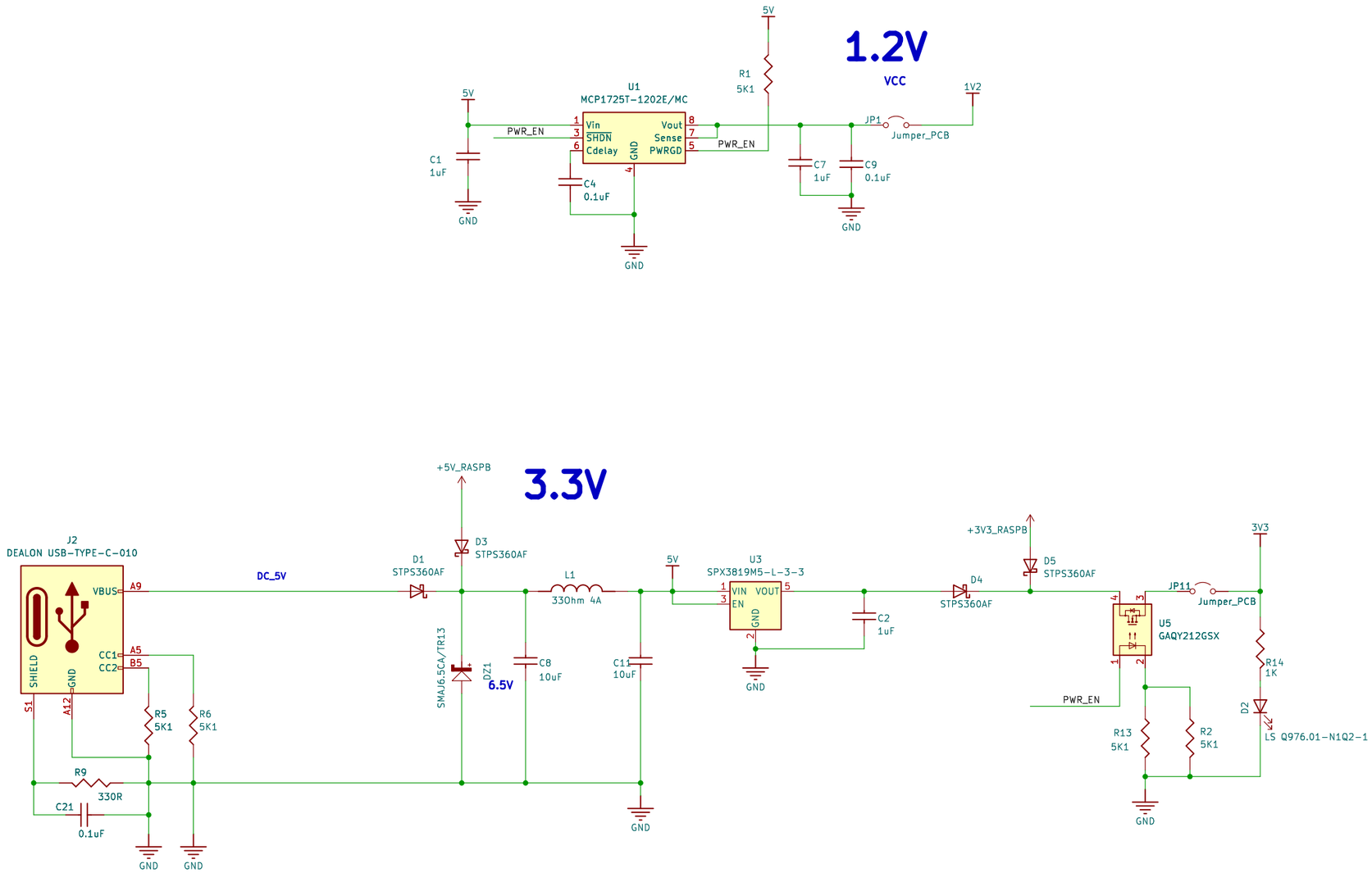

Pier Francesco Maria Santi
LOGITILES by Hexcape

Sheet: /Power/
File: Power.kicad_sch

Title: HEXBERRY-V-20Q100

Size: A3	Date: 2024-09-19	**Rev: 1.0**
KiCad E.D.A. 8.0.5		Id: 2/4

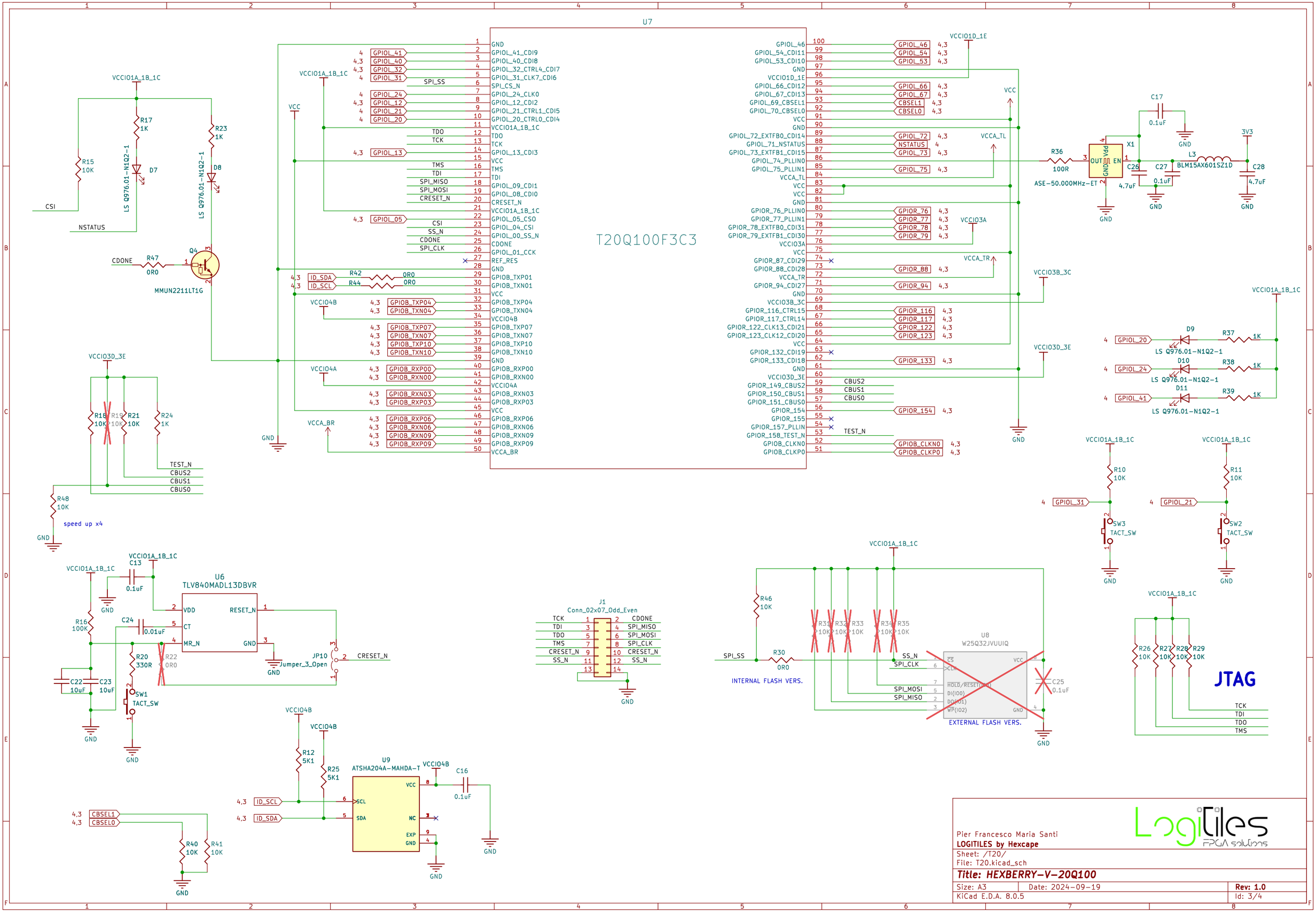
U7
T20Q100F3C3
GND
GPIOL_41_CDI9
GPIOL_40_CDI8
GPIOL_32_CTRL4_CDI7
GPIOL_31_CLK7_CDI6
SPI_CS_N
GPIOL_24_CLK0
GPIOL_12_CDI2
GPIOL_21_CTRL1_CDI5
GPIOL_20_CTRL0_CDI4
VCCIO1A_1B_1C
TDO
TCK
GPIOL_13_CDI3
VCC
TMS
TDI
GPIOL_09_CDI1
GPIOL_08_CDI0
CRESET_N
VCCIO1A_1B_1C
GPIOL_05_CSO
GPIOL_04_CSI
GPIOL_00_SS_N
CDONE
GPIOL_01_CCK
REF_RES
GND
GPIOB_TXP01
GPIOB_TXN01
VCC
GPIOB_TXP04
GPIOB_TXN04
VCCIO4B
GPIOB_TXP07
GPIOB_TXN07
GPIOB_TXP10
GPIOB_TXN10
GND
GPIOB_RXP00
GPIOB_RXN00
VCCIO4A
GPIOB_RXN03
GPIOB_RXP03
VCC
GPIOB_RXP06
GPIOB_RXN06
GPIOB_RXN09
GPIOB_RXP09
VCCA_BR
GPIOL_46
GPIOL_54_CDI11
GPIOL_53_CDI10
GND
VCCIO1D_1E
GPIOL_66_CDI12
GPIOL_67_CDI13
GPIOL_69_CBSEL1
GPIOL_70_CBSEL0
VCC
GND
GPIOL_72_EXTFB0_CDI14
GPIOL_71_NSTATUS
GPIOL_73_EXTFB1_CDI15
GPIOL_74_PLLIN0
GPIOL_75_PLLIN1
VCCA_TL
VCC
VCC
GND
GPIOR_76_PLLIN0
GPIOR_77_PLLIN1
GPIOR_78_EXTFB0_CDI31
GPIOR_79_EXTFB1_CDI30
VCCIO3A
VCC
GPIOR_87_CDI29
GPIOR_88_CDI28
VCCA_TR
GPIOR_94_CDI27
GND
VCCIO3B_3C
GPIOR_116_CTRL15
GPIOR_117_CTRL14
GPIOR_122_CLK13_CDI21
GPIOR_123_CLK12_CDI20
VCC
GPIOR_132_CDI19
GPIOR_133_CDI18
GND
VCCIO3D_3E
GPIOR_149_CBUS2
GPIOR_150_CBUS1
GPIOR_151_CBUS0
GPIOR_154
GPIOR_155
GPIOR_157_PLLIN
GPIOR_158_TEST_N
GPIOB_CLKN0
GPIOB_CLKP0
CBUS2
CBUS1
CBUS0
TEST_N
VCCIO1D_1E
VCC
VCCA_TL
VCCIO3A
VCCA_TR
VCCIO3B_3C
VCCIO3D_3E
GND
VCCIO1A_1B_1C
CSI
NSTATUS
R17 1K
R23 1K
R15 10K
LS Q976.01-N1Q2-1
D7
D8
CDONE
R47 0R0
Q4
MMUN2211LT1G
ID_SDA
ID_SCL
R42 0R0
R44 0R0
VCCIO4B
VCCIO4A
VCCIO3D_3E
R18 10K
R19 10K
R21 10K
R24 1K
TEST_N
CBUS2
CBUS1
CBUS0
R48 10K
speed up x4
GND
VCCIO1A_1B_1C
C13 0.1uF
U6
TLV840MADL13DBVR
VDD
CT
MR_N
RESET_N
GND
R16 100K
C24 0.01uF
R20 330R
R22 0R0
C22 10uF
C23 10uF
SW1
TACT_SW
JP10
Jumper_3_Open
CRESET_N
J1
Conn_02x07_Odd_Even
TCK
TDI
TDO
TMS
CRESET_N
SS_N
CDONE
SPI_MISO
SPI_MOSI
SPI_CLK
CRESET_N
SS_N
VCCIO4B
R12 5K1
R25 5K1
U9
ATSHA204A-MAHDA-T
VCC
SCL
SDA
NC
EXP
GND
C16 0.1uF
ID_SCL
ID_SDA
CBSEL1
CBSEL0
R40 10K
R41 10K
R36 100R
ASE-50.000MHz-ET
OUT
EN
GND
Vdd
X1
C17 0.1uF
C26 4.7uF
C27 0.1uF
L3 BLM15AX601SZ1D
3V3
C28 4.7uF
D9
D10
D11
R37 1K
R38 1K
R39 1K
LS Q976.01-N1Q2-1
R10 10K
R11 10K
SW3
SW2
TACT_SW
R46 10K
R30 0R0
SPI_SS
INTERNAL FLASH VERS.
R31 10K
R32 10K
R33 10K
R34 10K
R35 10K
U8
W25Q32JVUUIQ
CS
CLK
HOLD/RESET(IO3)
DI(IO0)
DO(IO1)
WP(IO2)
VCC
GND
SS_N
SPI_CLK
SPI_MOSI
SPI_MISO
C25 0.1uF
EXTERNAL FLASH VERS.
R26 10K
R27 10K
R28 10K
R29 10K
JTAG
TCK
TDI
TDO
TMS
Pier Francesco Maria Santi
LOGITILES by Hexcape
Sheet: /T20/
File: T20.kicad_sch
Title: HEXBERRY-V-20Q100
Size: A3
Date: 2024-09-19
Rev: 1.0
KiCad E.D.A. 8.0.5
Id: 3/4

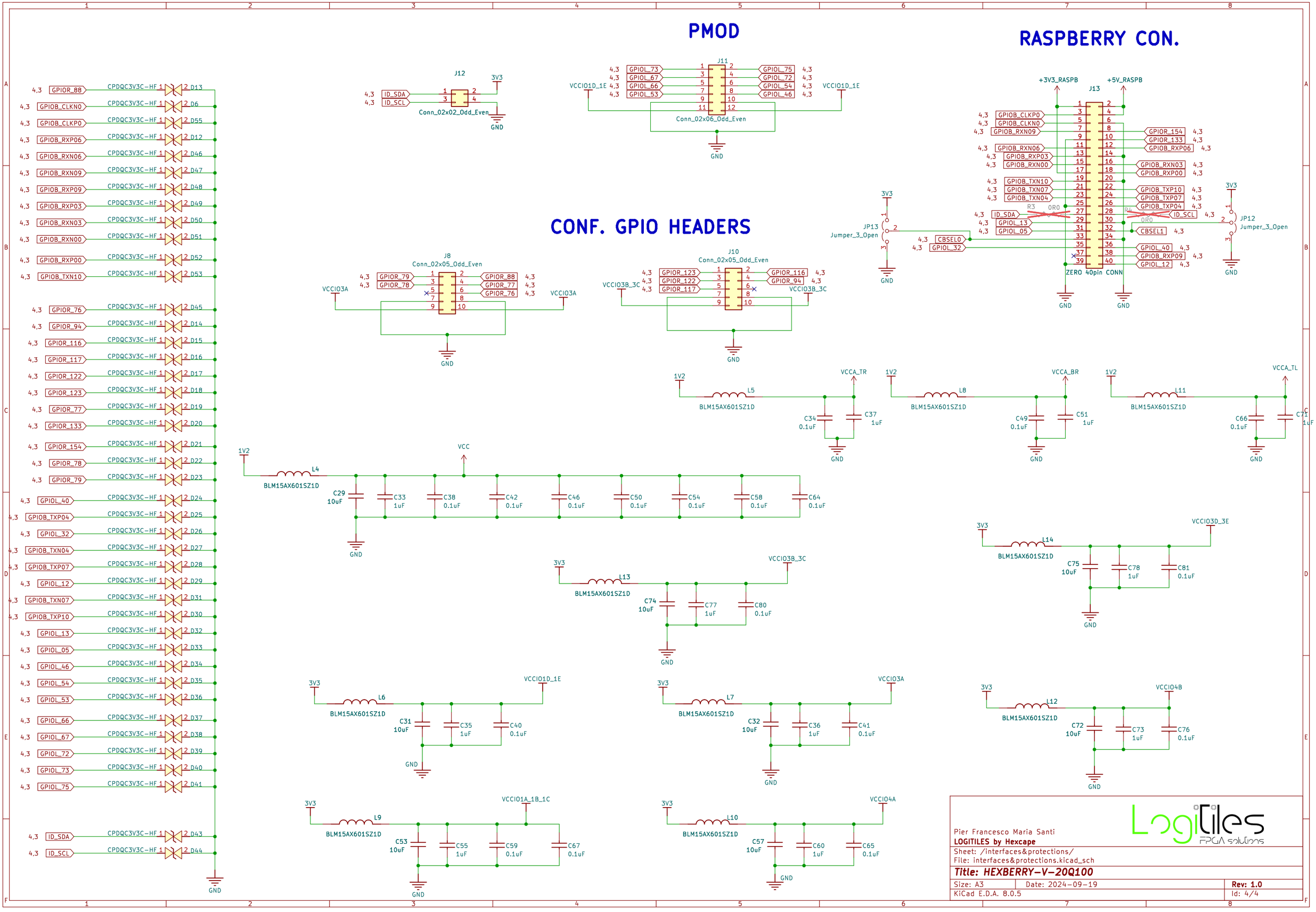

Pier Francesco Maria Santi
LOGITILES by Hexcape
Sheet: /interfaces&protections/
File: interfaces&protections.kicad_sch

Title: HEXBERRY-V-20Q100

Size: A3	Date: 2024-09-19	**Rev: 1.0**
KiCad E.D.A. 8.0.5		Id: 4/4