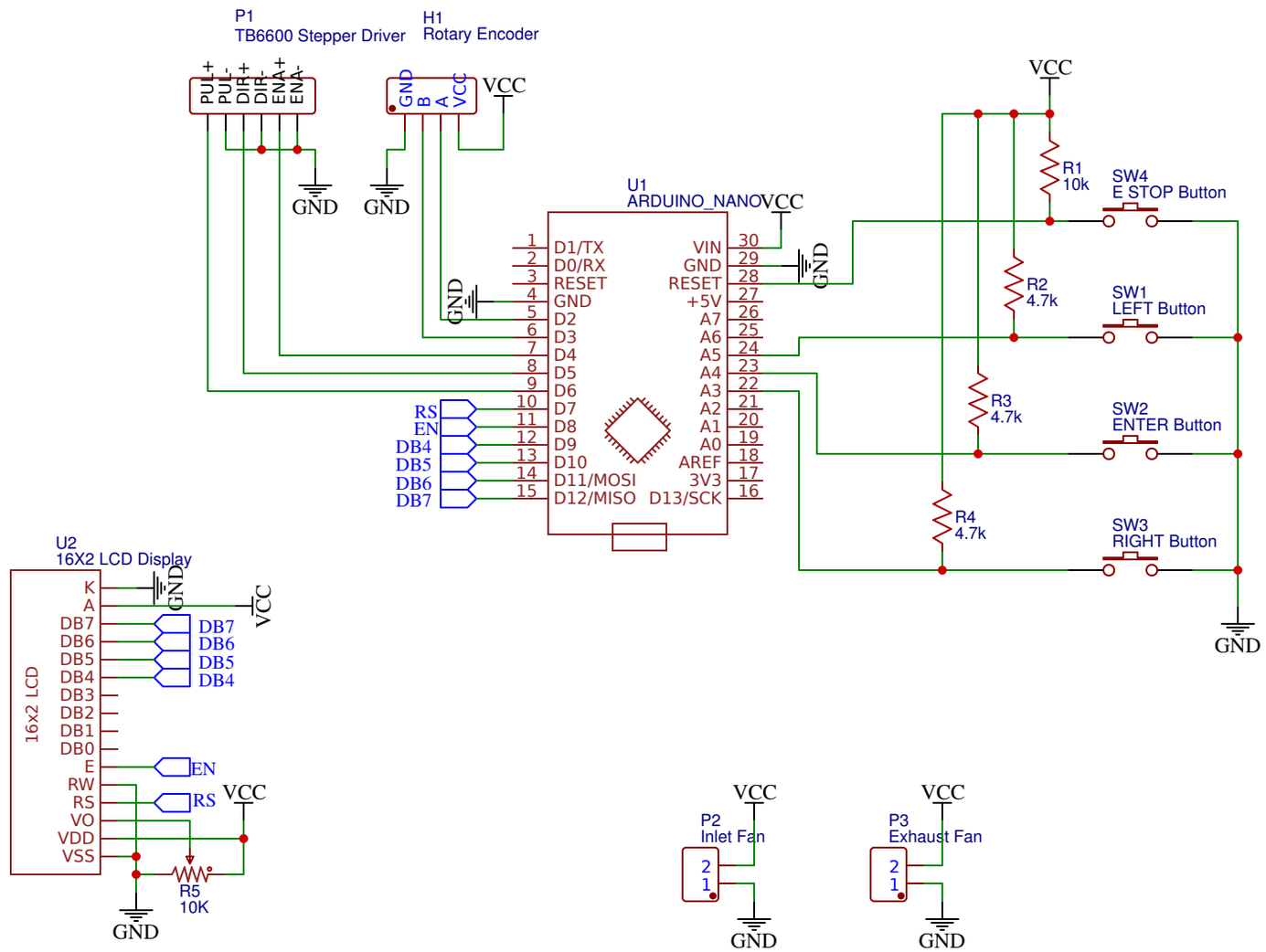

TITLE: Automatic Coiler V2		REV: 1.0
EasyEDA	Company: Your Company	Sheet: 1/1
	Date: 2019-06-27 Drawn By: Chris Loidolt	