Adder Subtractor Circuit

22 September 2023 11:21

$A = 1101$
$+\ B = 1001$
10110
carry

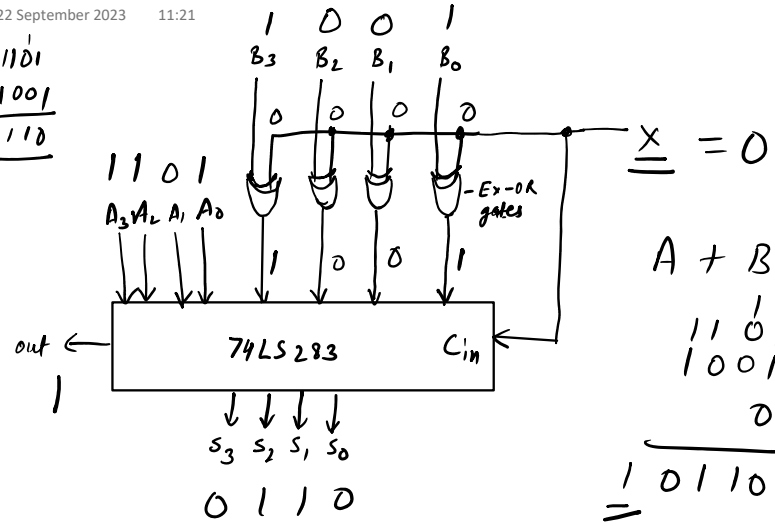

$\underline{\underline{X}} = 0$

$A + B + C_{in} = \text{Sum}$

$$\begin{array}{r} 1101 \\ 1001 \\ 0 \\ \hline 10110 \end{array}$$

C.

$A - B \rightarrow$

$$\begin{array}{r} 1101 \\ -\ 1001 \\ \hline 0100 \end{array}$$

4

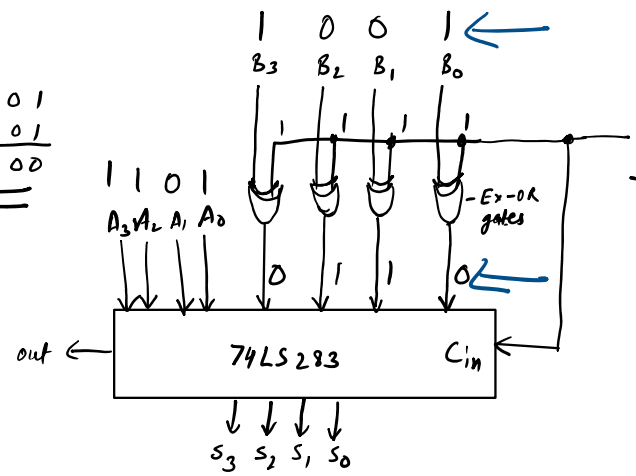

$\underline{\underline{X}} = 1$

1001
0110 → 1's complement

$A + [(\text{1's complement of } B) + 1]$

↓

$A + [\text{2's complement of } B]$

O/P → $A - B$

$$\begin{array}{r} 0110 \\ +\ 1 \\ \hline 0111 \end{array}$$

C_{in}

2's complement

$$\begin{array}{r} 1101 \\ +\ 0111 \\ \hline \boxed{1}\,0100 \end{array}$$

2's

↳ 4