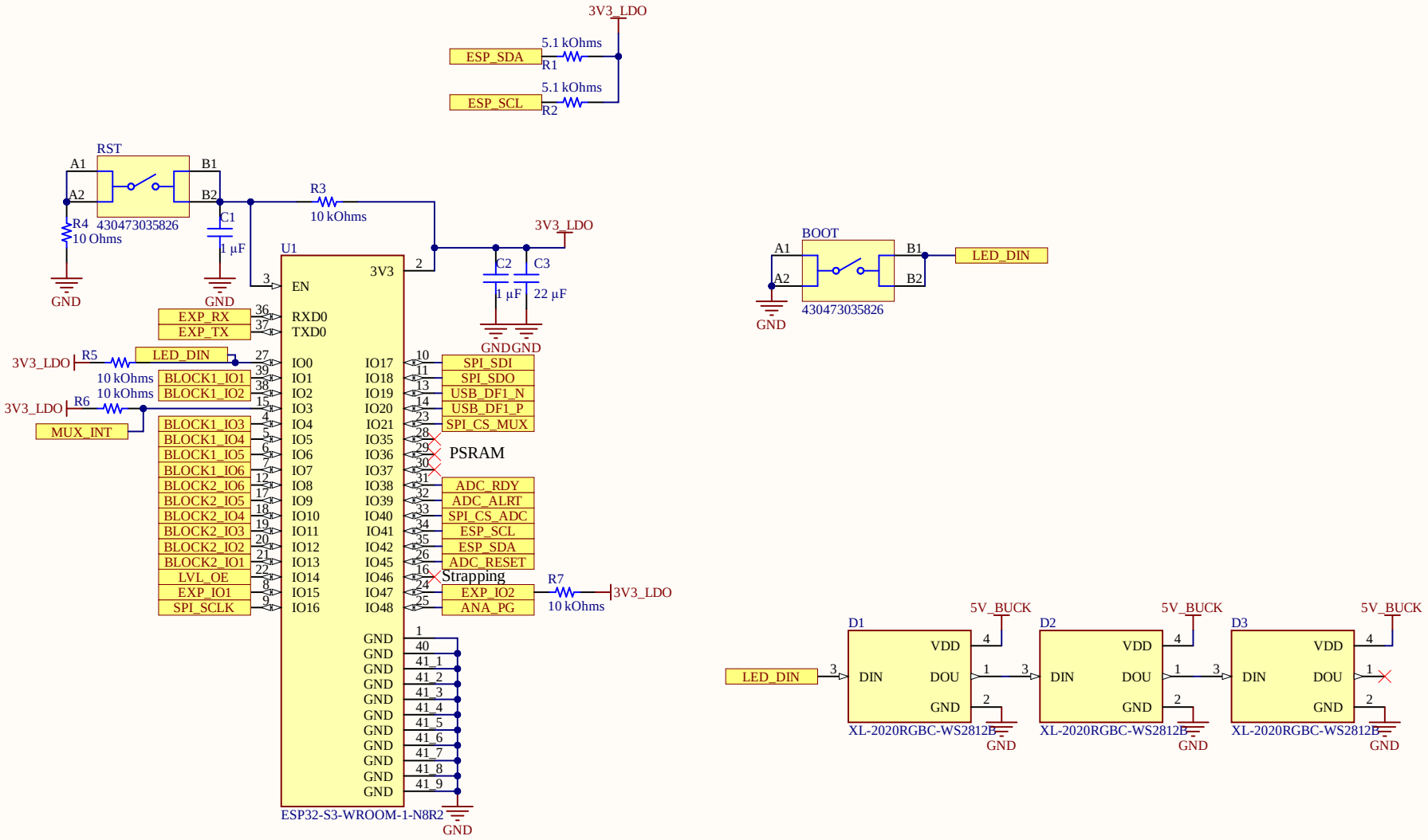

Title		
ESP32		
Size: A4	Number: 1	Revision: A
Date: 3/28/2026		Sheet of
File: C:\Users\..\ESP32.SchDoc		Drawn By: Lorenzo

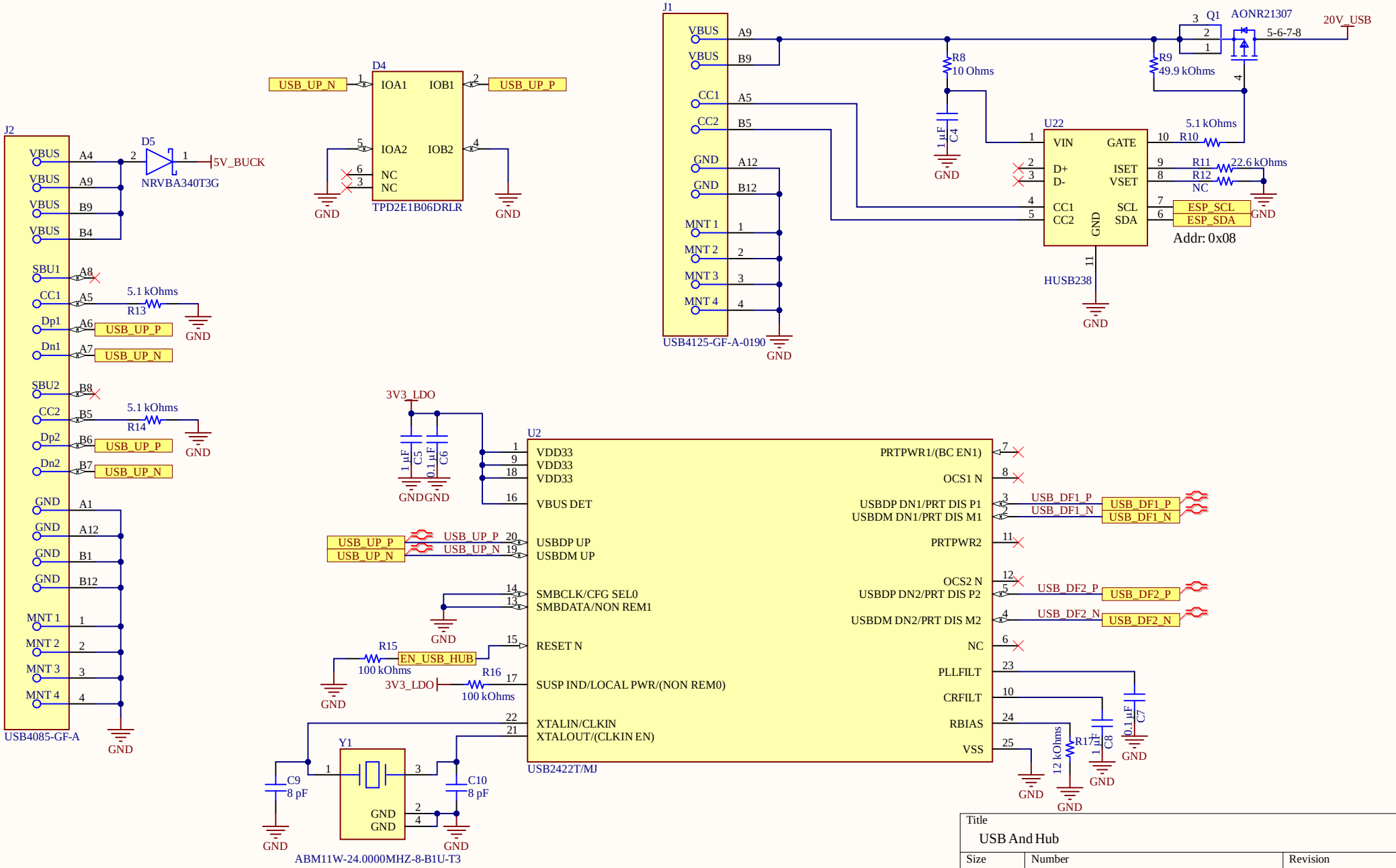
J2
USB4085-GF-A
VBUS A4
VBUS A9
VBUS B9
VBUS B4
SBU1 A8
CC1 A5
Dp1 A6
Dn1 A7
SBU2 B8
CC2 B5
Dp2 B6
Dn2 B7
GND A1
GND A12
GND B1
GND B12
MNT 1 1
MNT 2 2
MNT 3 3
MNT 4 4
D5
NRVBA340T3G
5V_BUCK
5.1 kOhms
R13
R14
USB_UP_P
USB_UP_N
GND
D4
TPD2E1B06DRLR
IOA1
IOB1
IOA2
IOB2
NC
J1
USB4125-GF-A-0190
VBUS A9
VBUS B9
CC1 A5
CC2 B5
GND A12
GND B12
MNT 1 1
MNT 2 2
MNT 3 3
MNT 4 4
R8
10 Ohms
R9
49.9 kOhms
C4
1 µF
Q1
AONR21307
5-6-7-8
20V_USB
U22
HUSB238
VIN
GATE
D+
D-
ISET
VSET
CC1
CC2
SCL
SDA
R10
5.1 kOhms
R11
22.6 kOhms
R12
NC
ESP_SCL
ESP_SDA
Addr: 0x08
3V3_LDO
C5
1 µF
C6
0.1 µF
U2
USB2422T/MJ
VDD33
VBUS DET
USBDP UP
USBDM UP
SMBCLK/CFG SEL0
SMBDATA/NON REM1
RESET N
SUSP IND/LOCAL PWR/(NON REM0)
XTALIN/CLKIN
XTALOUT/(CLKIN EN)
PRTPWR1/(BC EN1)
OCS1 N
USBDP DN1/PRT DIS P1
USBDM DN1/PRT DIS M1
PRTPWR2
OCS2 N
USBDP DN2/PRT DIS P2
USBDM DN2/PRT DIS M2
NC
PLLFILT
CRFILT
RBIAS
VSS
USB_DF1_P
USB_DF1_N
USB_DF2_P
USB_DF2_N
R15
100 kOhms
EN_USB_HUB
R16
100 kOhms
R17
12 kOhms
C7
0.1 µF
C8
1 µF
Y1
ABM11W-24.0000MHZ-8-B1U-T3
C9
8 pF
C10
8 pF
Title
USB And Hub
Size
A4
Number
1
Revision
A
Date: 3/28/2026
File: C:\Users\..\USB.SchDoc
Sheet of
Drawn By: Lorenzo

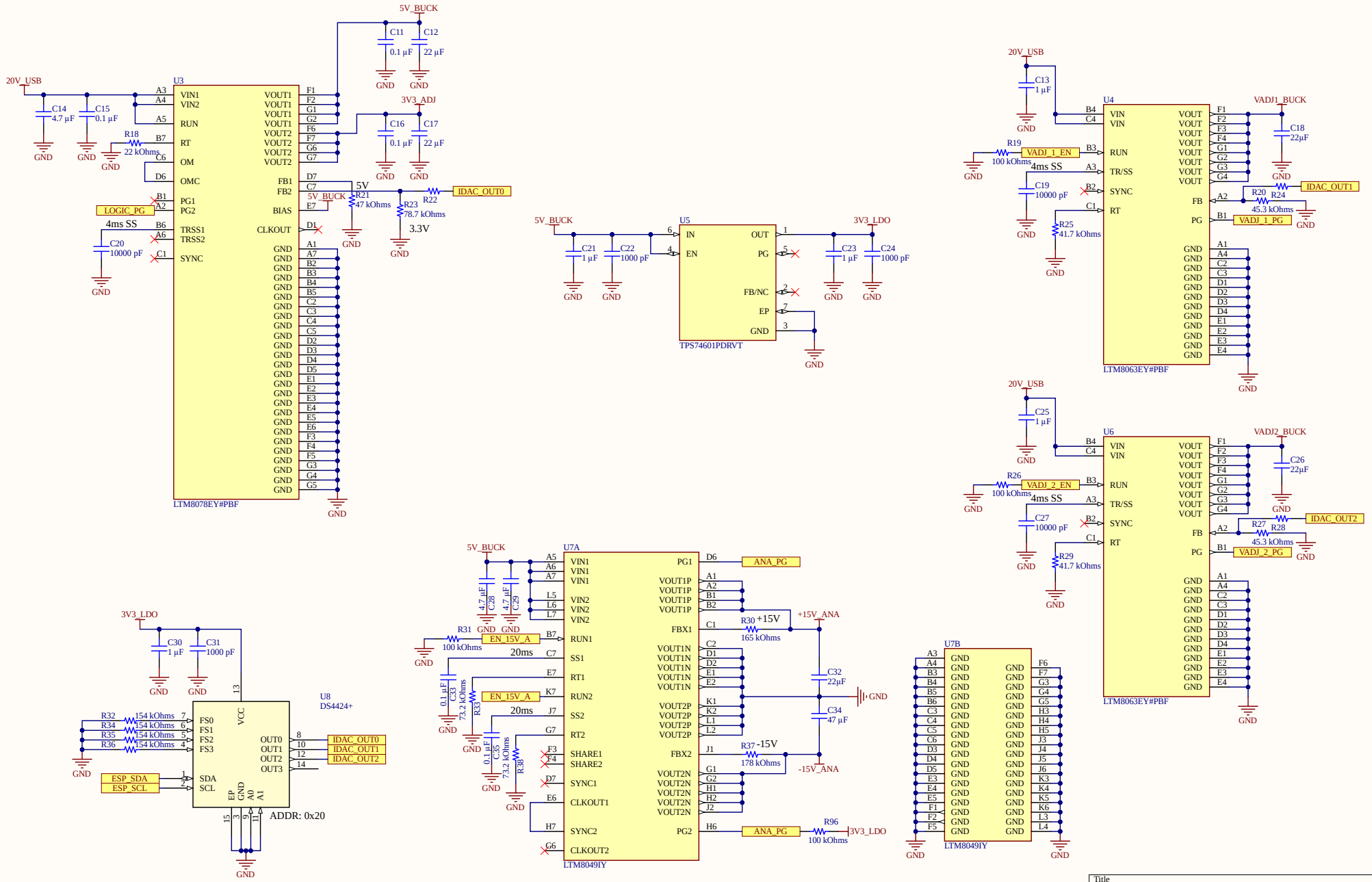

Title		
Power and Adjustments		
Size: A3	Number: 1	Revision: A
Date: 3/28/2026		Sheet of
File: C:\Users\..\Power.SchDoc		Drawn By: Lorenzo

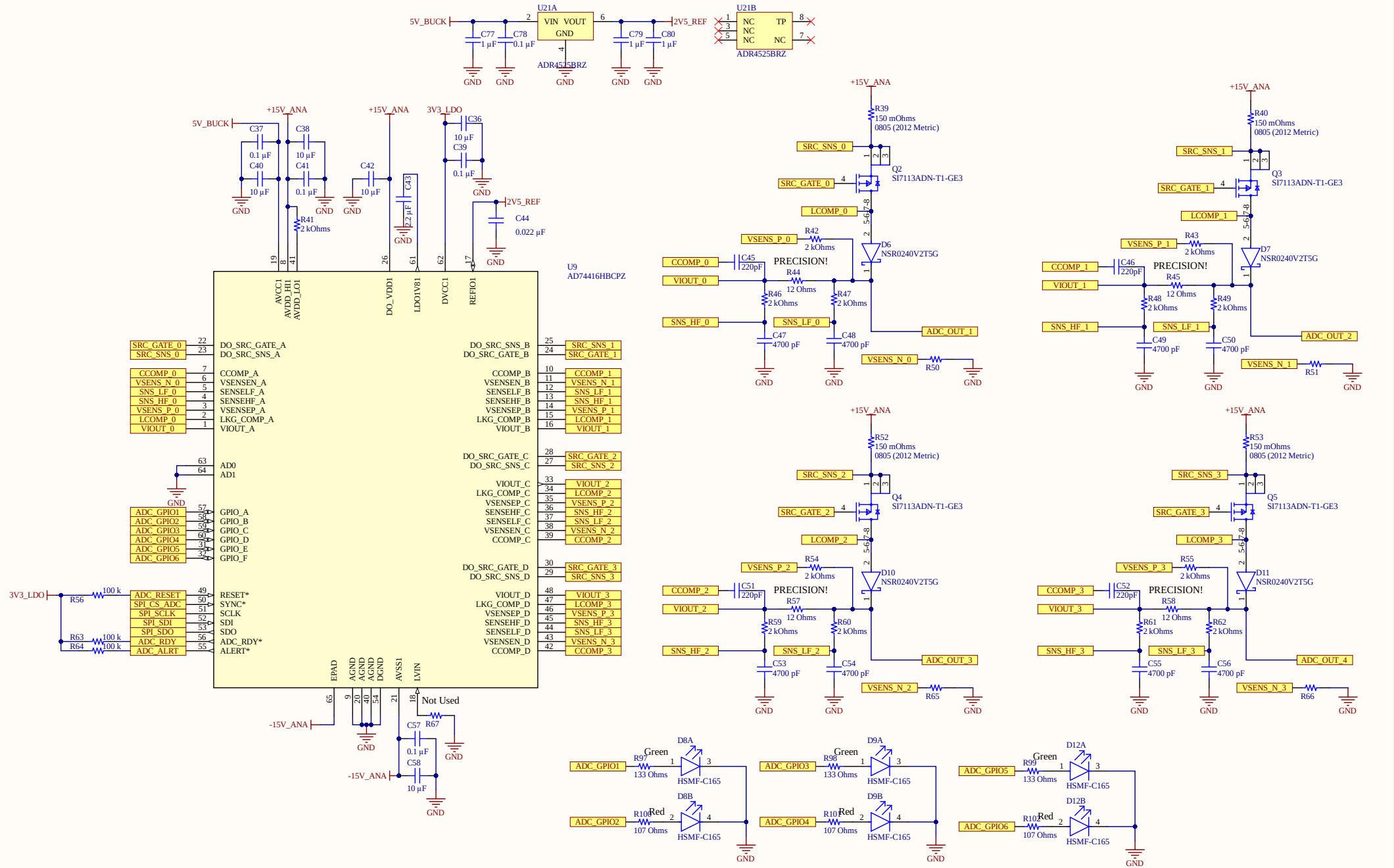

Title		
ADC Section		
Size: A3	Number: 1	Revision: A
Date: 3/28/2026		Sheet of
File: C:\Users\..\Analog.SchDoc		Drawn By: Lorenzo

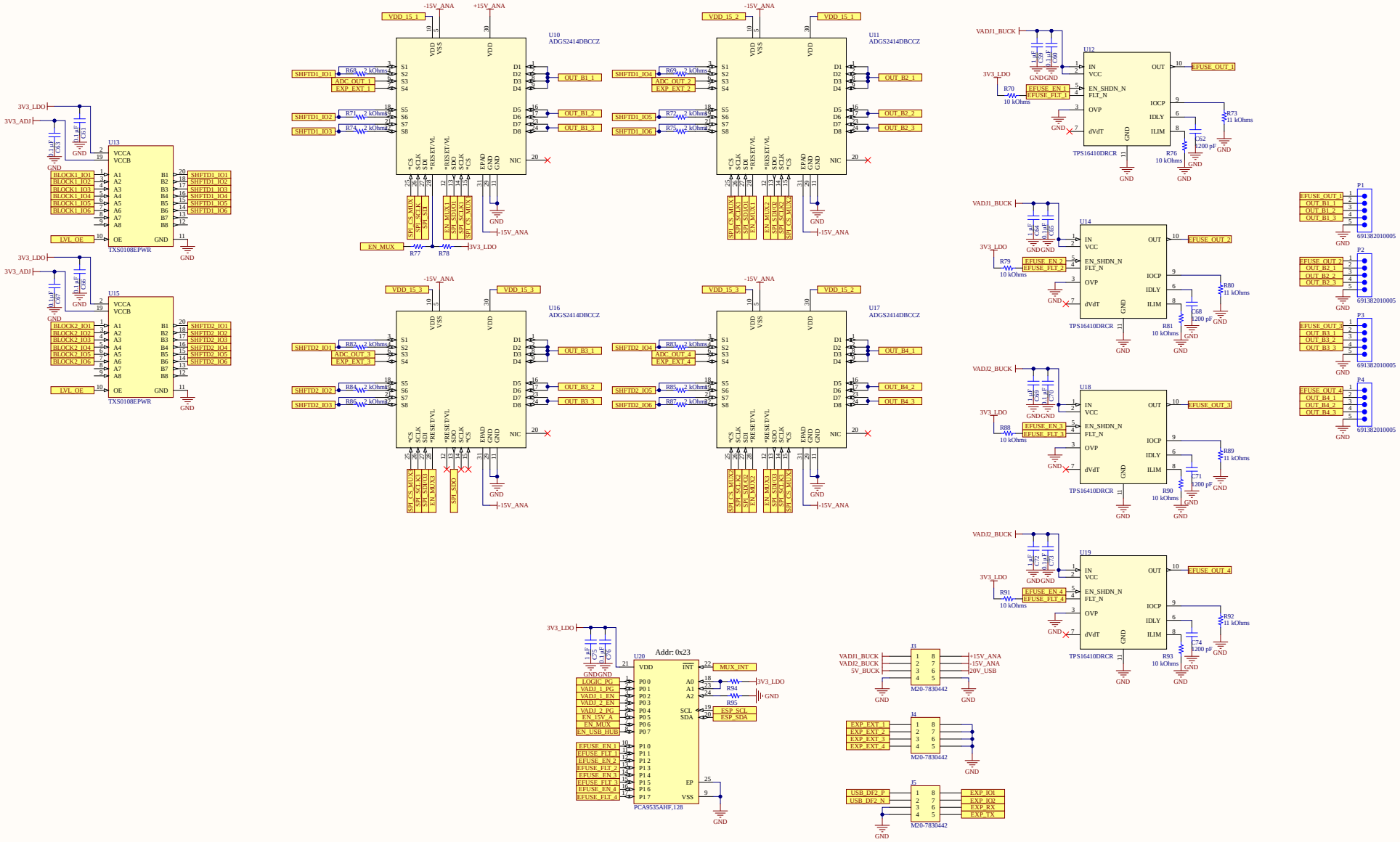

Title		
IOs Mux and Connectors		
Size	Number	Revision
A2	1	A
Date: 3/28/2026		Sheet of
File: C:\Users\...\IOs.SchDoc		Drawn By: Lorenzo

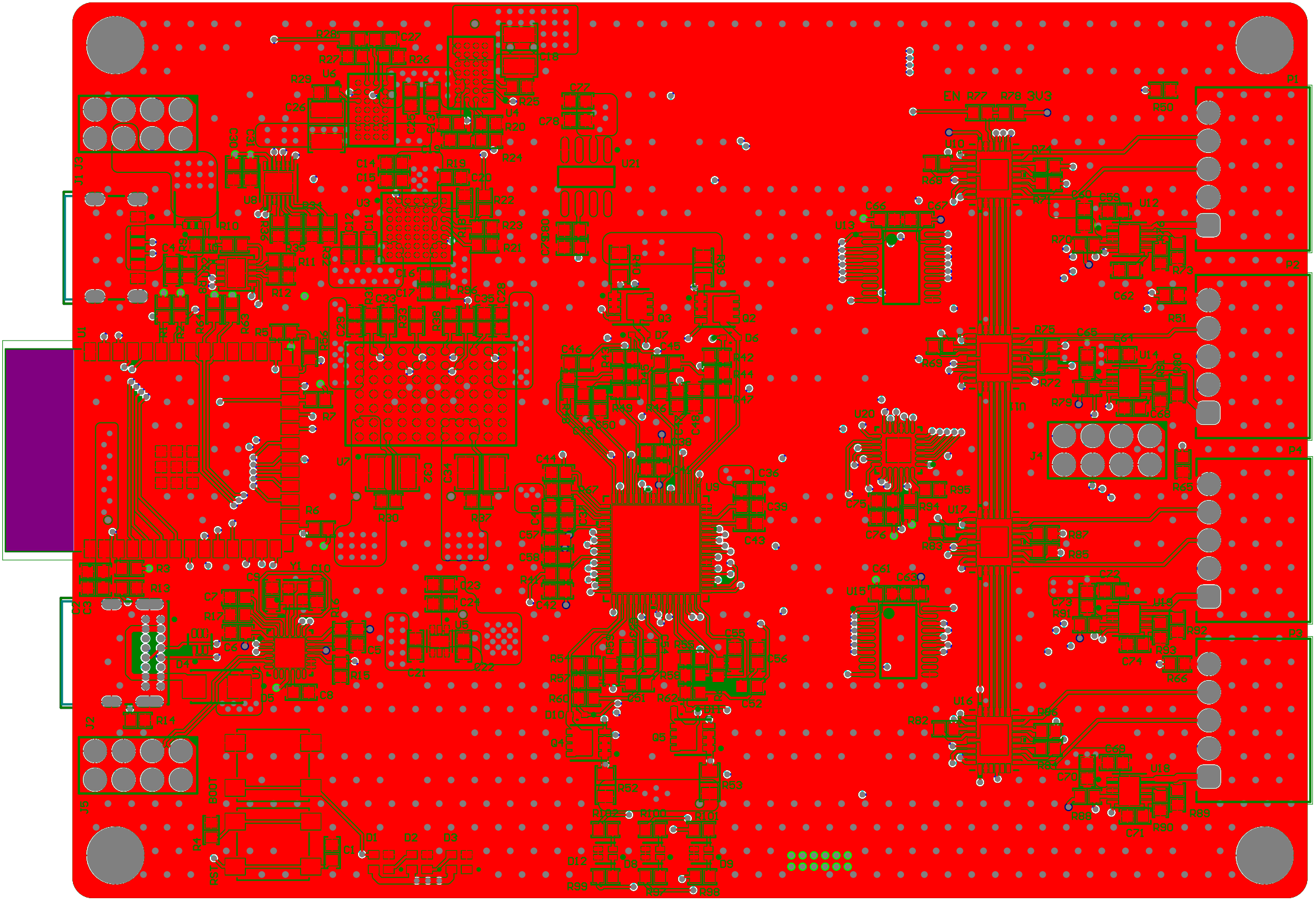
EN
3V3
P1
P2
P3
P4
J1
J2
J3
J4
J5
U1
U2
U3
U4
U5
U6
U7
U8
U9
U10
U11
U12
U13
U14
U15
U16
U17
U18
U20
U21