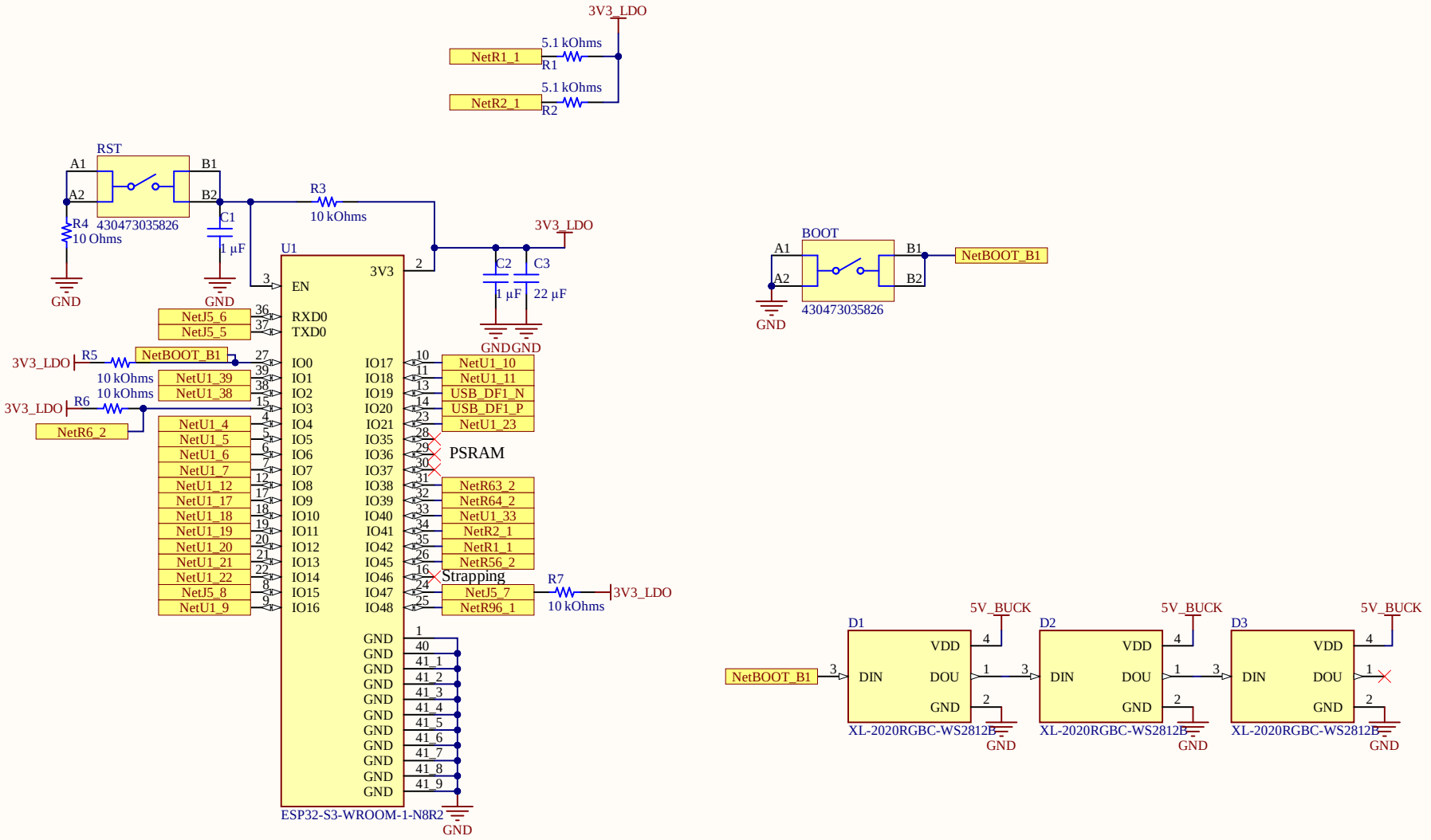

Title		
ESP32		
Size: A4	Number: 1	Revision: A
Date: 3/27/2026		Sheet of
File: C:\Users\..\ESP32.SchDoc		Drawn By: Lorenzo

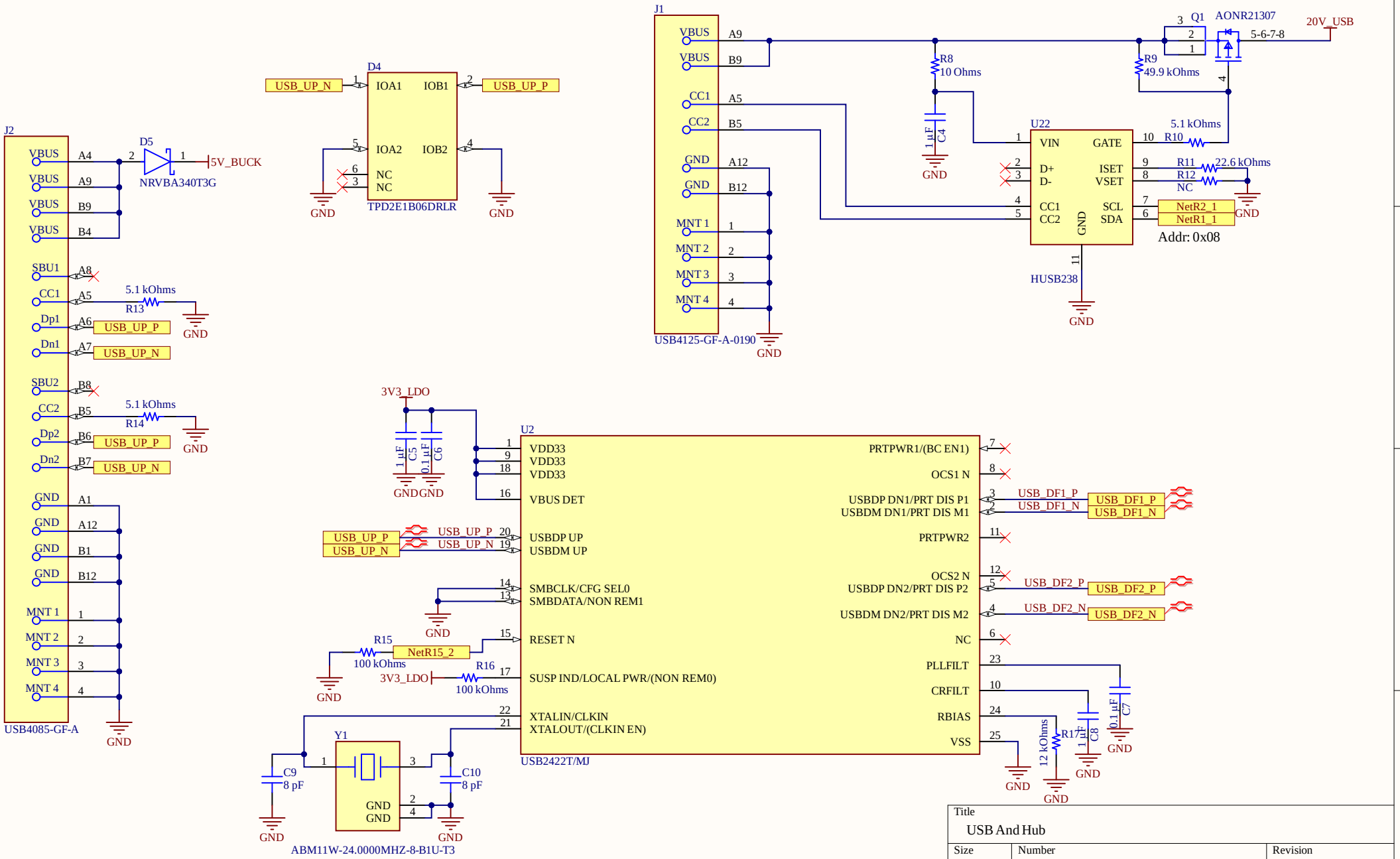

Title		
USB And Hub		
Size: A4	Number: 1	Revision: A
Date: 3/27/2026		Sheet of
File: C:\Users\..\USB.SchDoc		Drawn By: Lorenzo

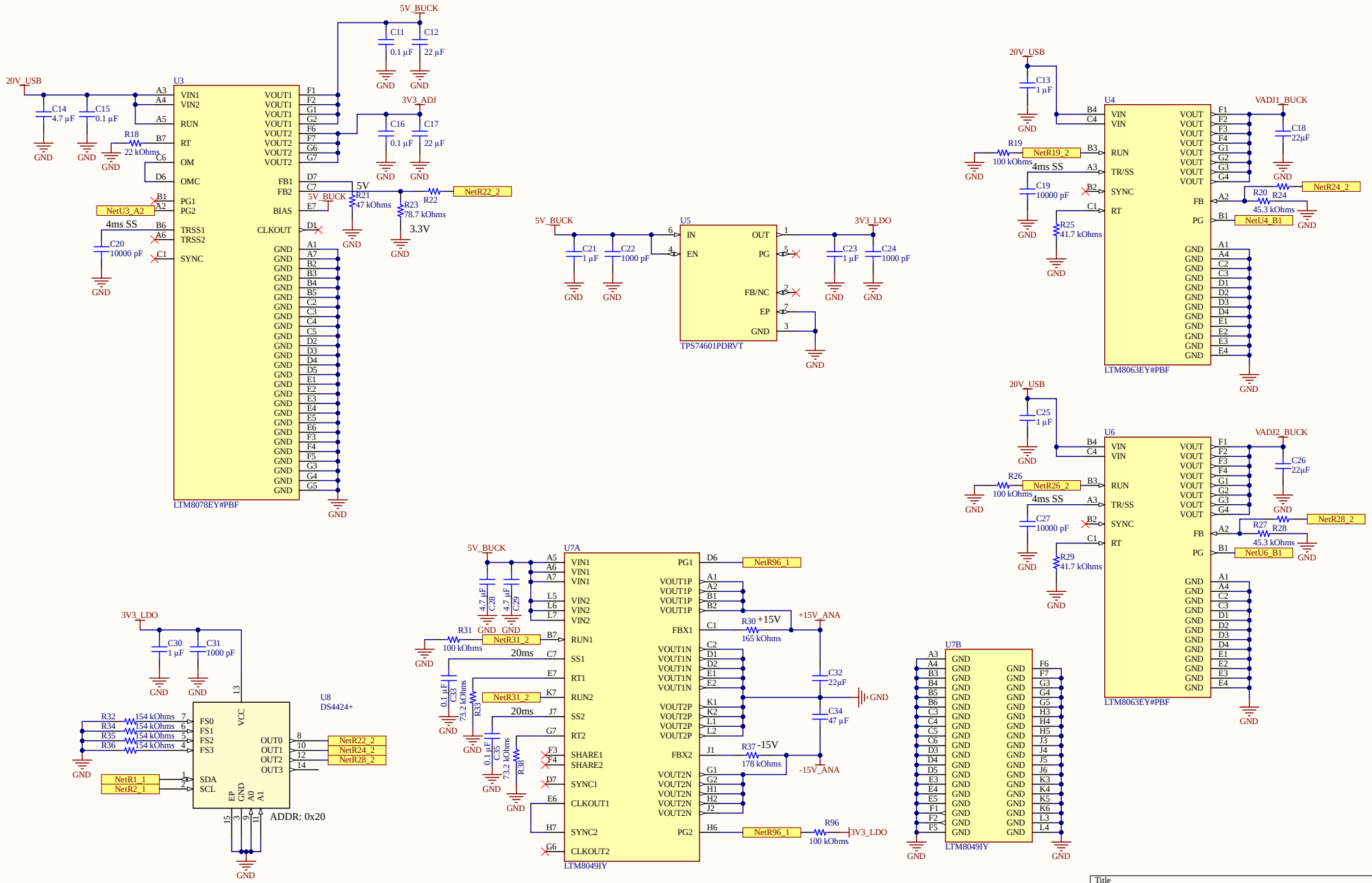

Title		
Power and Adjustments		
Size: A3	Number: 1	Revision: A
Date: 3/27/2026		Sheet of
File: C:\Users\..\Power.SchDoc		Drawn By: Lorenzo

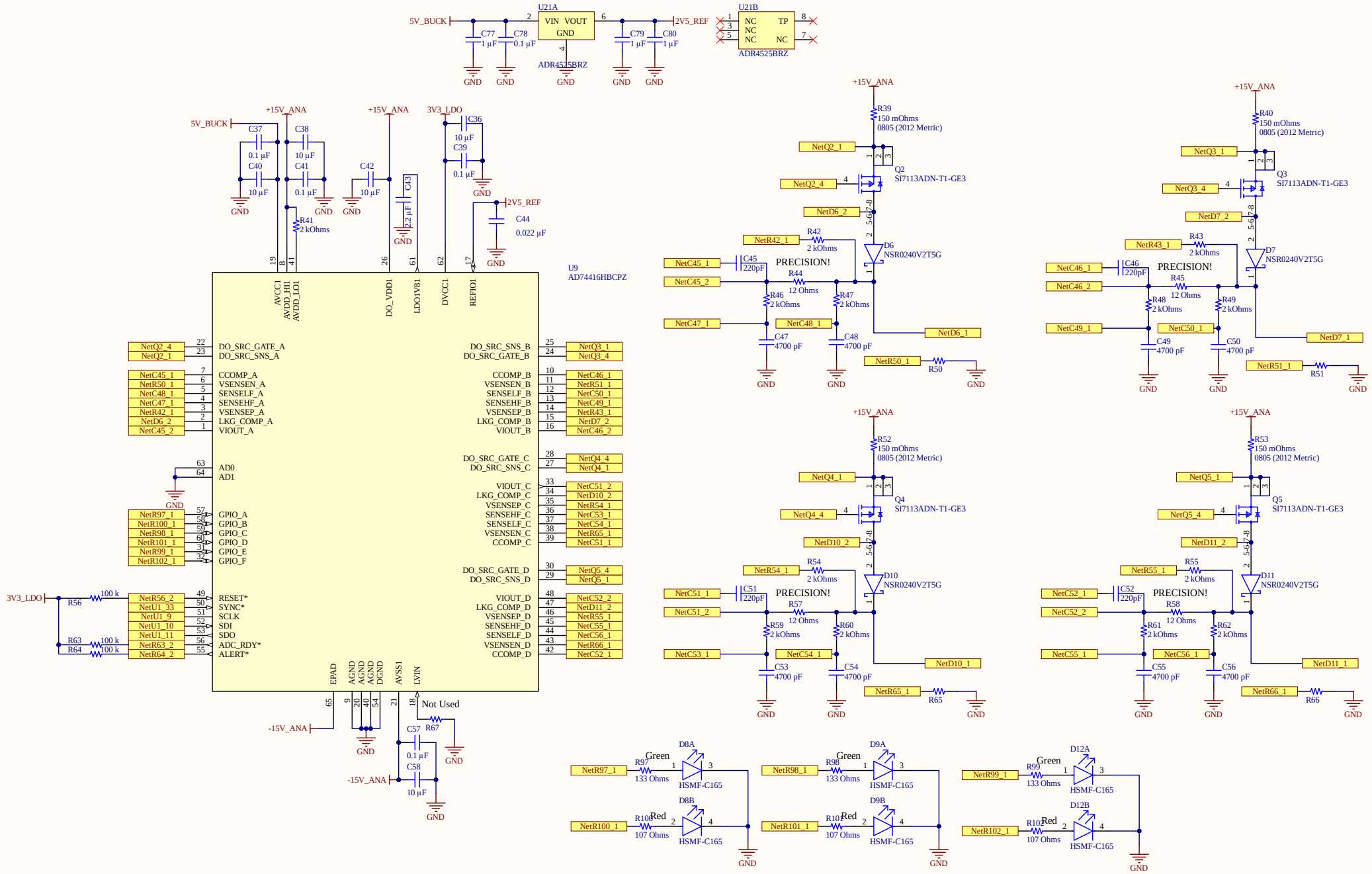

Title		
ADC Section		
Size: A3	Number: 1	Revision: A
Date: 3/27/2026		Sheet of
File: C:\Users\..\Analog.SchDoc		Drawn By: Lorenzo

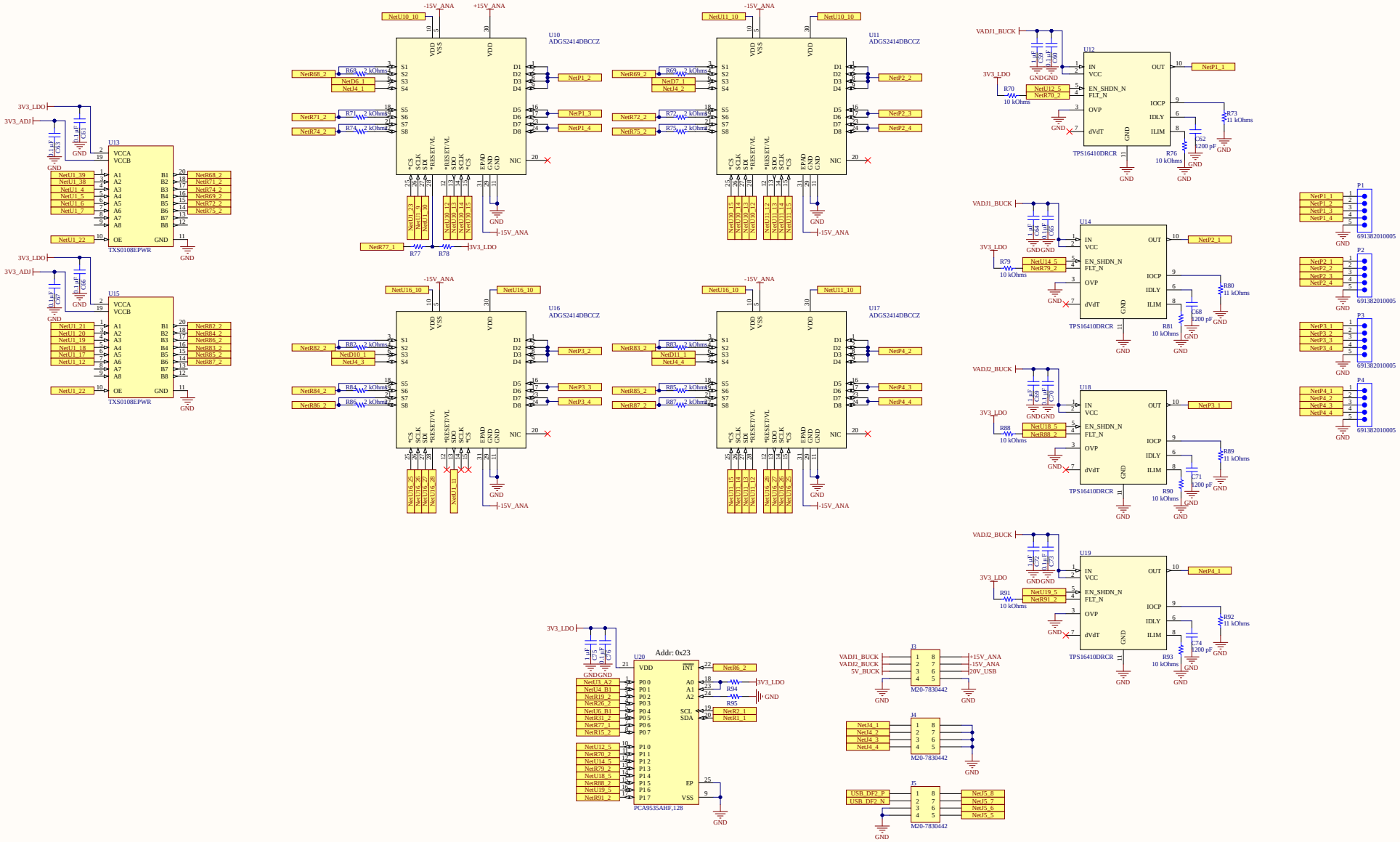

Title		
IOs Mux and Connectors		
Size: A2	Number: 1	Revision: A
Date: 3/27/2026	Sheet of	
File: C:\Users\...\IOs.SchDoc	Drawn By: Lorenzo	

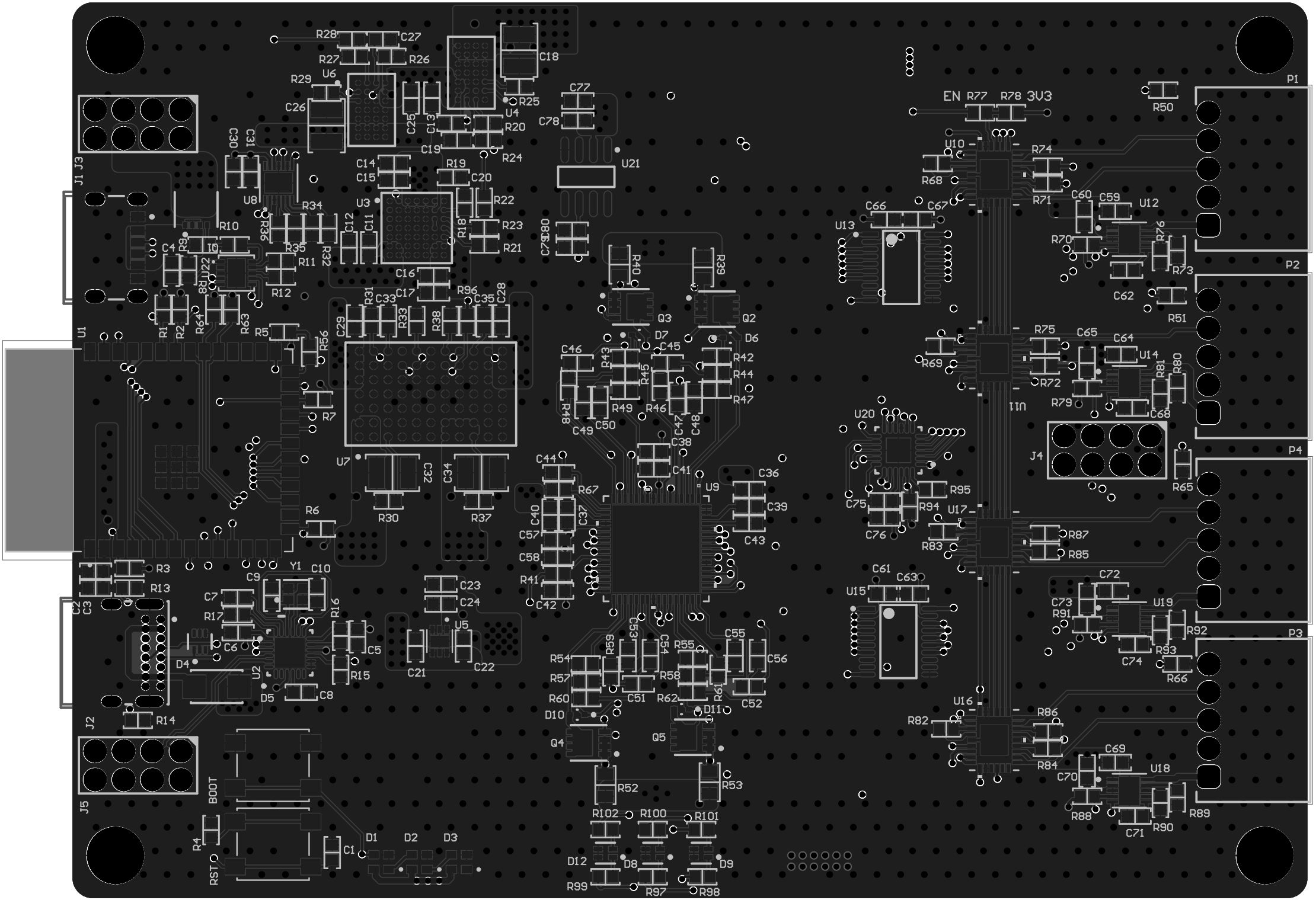
EN
R77
R78
3V3
P1
P2
P3
P4
J1
J2
J3
J4
J5
U1
U2
U3
U4
U5
U6
U7
U8
U9
U10
U11
U12
U13
U14
U15
U16
U17
U18
U19
U20
U21
U22
BOOT
RST