POLITECNICO
MILANO 1863

Study of a Fractured Rock Pillar Case with 3DEC

Advanced soil and rock mechanics

Civil Engineering

Professor: Francesco Calvetti

Students: Fabio Lonciari 252322

Beatrice Useri 231094

Martina De Luca 225211

A.A. 2023/2024

Table of Contents

Summary 4
Rock Slope Stability and Analysis 4
Geometry of the Rock Pillar 5
Parameter Estimation for Modelling 6
Joint Parameters 6
Rock Mass Properties 7
Adjustments for Joint Persistence and Resistance 8
Task 1: Stability Analysis Using SRF 9
Case A 9
Case B 11
Case C 14
Task 2: Reinforcement Design 17
Design of the reinforcement 17
Discussion of the results 23

Summary

In the following study, an attempt has been made to investigate the stability of a rock slope. Emphasis is given to the fact that discontinuities in rock masses play a vital and critical role. The analysis is done by the software 3DEC, which uses the Discrete Element Method (DEM).

The study is done by using the Strength Reduction Factor (SRF) approach, it evaluates the contribution to stability of the different joint families and it designs an appropriate reinforcement system.

Rock Slope Stability and Analysis

The behaviour of rock masses depends on the resistance, geometric orientation, and density of the discontinuities present.

Rock masses are considered made of discrete block, and the block movements are tracked using the equations of motion. The forces in contact between the blocks are then updated. DEM proves to be helpful since it takes into account large displacements of blocks opposed to the Finite Element Method (FEM) which doesn't allow the detachment of individual blocks. The elastic properties of the rock are not relevant in the description of the discrete blocks in our model, which is considered rigid. However, the deformability of the rock mass is taken into account by considering the behaviour of the joints.

A disadvantage of DEM is that the model with rigid blocks must be modelled with continuous joints because only fully disconnected blocks can move while the rest remain monolithic. Therefore, also the joint resistance must be modified in order to account for the persistence of the joint.

This project is aimed at analysing a rock pillar with predefined geometry and three joint families. The SRF approach applied to the joint families reduces their strength and it brings the pillar to failure. Then a reinforcement system was designed considering the weakened pillar.

Geometry of the Rock Pillar

The geometry of the pillar and the configuration of the joints play a significant role in assessing its stability.

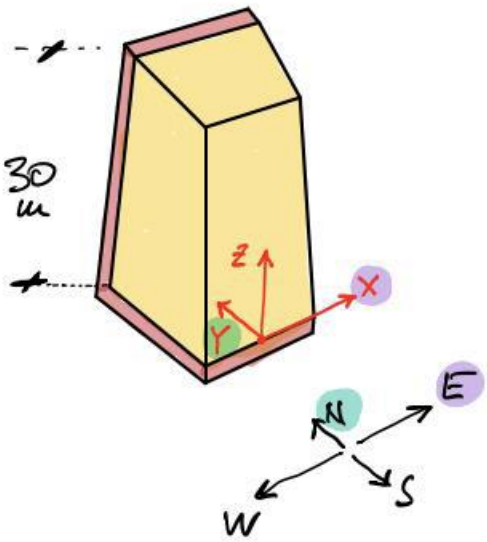

Figure 1- Three-Dimensional Geometry of the Rock Pillar

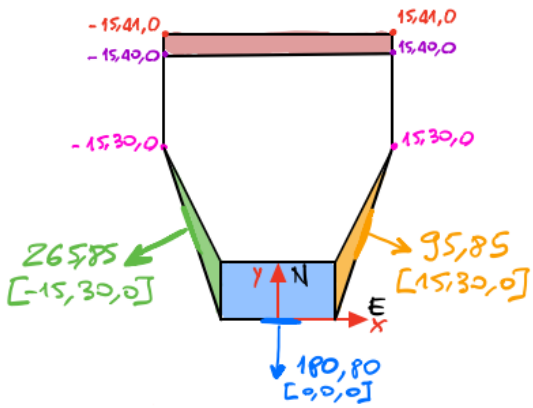

Figure 2 - Top View of the Rock Pillar

Figure 1 shows a topographical representation of the rock pillar and of the surrounding boundary blocks. The orientation of the Y axis is aligned to the North while the X axis is aligned to the Est. Figure 2 provides a top view with the spatial coordinates and parameters for the definition of the planes. The figure includes indications of the dip directions and inclinations, detailing the different slopes of the three planes.

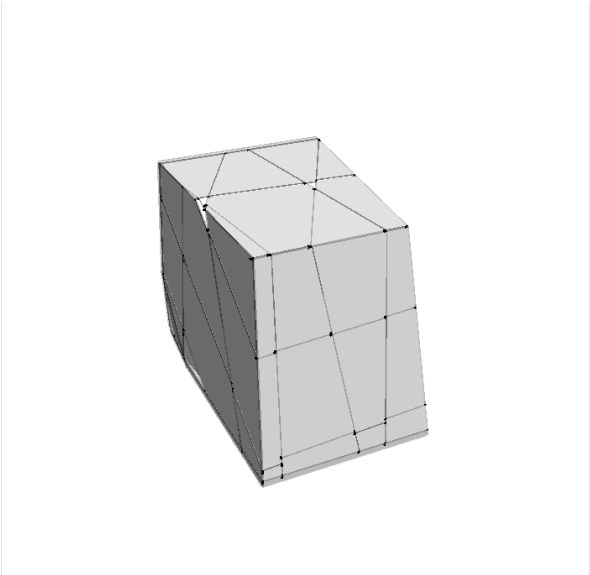

Figure 3 - Rock Pillar on 3DEC

Parameter Estimation for Modelling

The accurate estimation of the parameters is a critical issue in the modelling of the rock pillar. The parameters include strength, stiffness properties of the rock mass and joint parameters. The former set of parameters is acquired through geological surveys, laboratory testing, and statistical analyses, giving an adequate foundation for the DEM model.

Joint Parameters

The joint parameters describe the behavior of the discontinuities within the rock mass. They include joint orientation, spacing, persistence, roughness, and shear strength. These parameters are evaluated through field surveys and laboratory tests, such as direct shear tests.

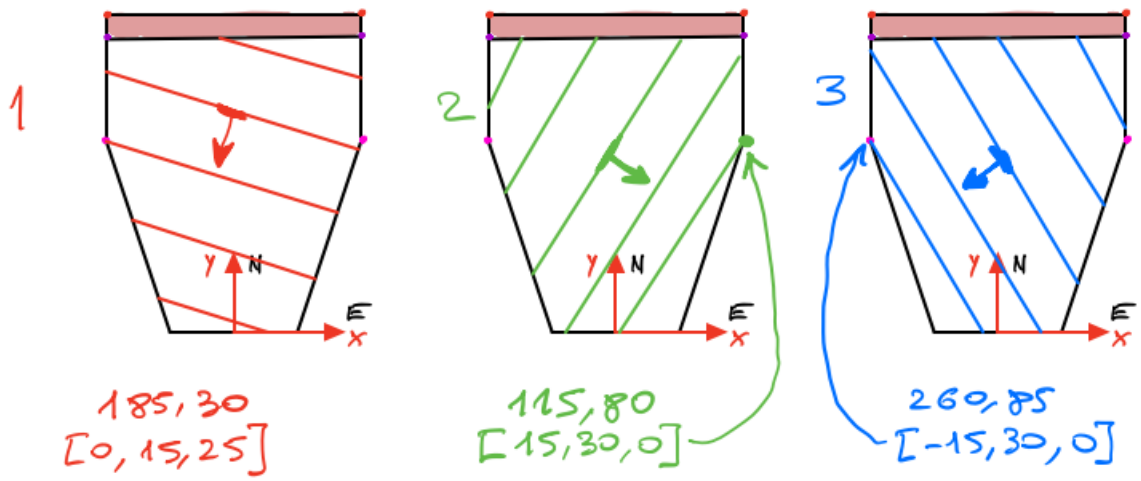

Figure 3 - Structure of the Three Joint Families in the Rock Pillar

Figure 3 shows the three different joint families. In particular, the first joint family refers to the bedding of the rock, which is the arrangement of sedimentary rocks into layers, also known as stratification. The second and third sets of joint families are fractures, which are discontinuities in the rock where cohesion has been lost due to a brittle deformation process. All these joints are characterized as empty. In Table 1 are highlighted the principal parameters of each joint family.

	TYPE	DIP DIRECTION	DIP ANGLE	SPACING	K	1-K
1	BEDDING	185°	30°	12cm	99%	1%
2	FRACTURES	115°	80°	15cm	97%	3%
3	FRACTURES	260°	85°	15cm	97%	3%

Table 1 - Parameters of each Set of Joint Families

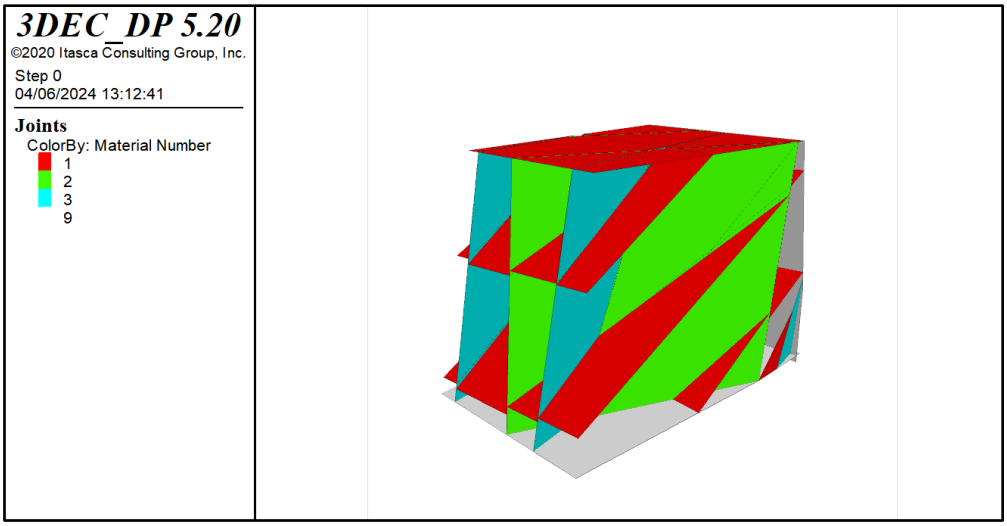

Figure 4 – Joint family on 3DEC, white colour represents the boundary.

Rock Mass Properties

The rock to be analysed is sandstone: the values that define the properties of the rock mass include the intact rock strength and stiffness and properties of the discontinuities. Intact rock properties are almost always taken directly from laboratory testing of core samples, which include the uniaxial compressive strength and tensile strength.

σ_c	σ_t	c	ρ	RMR	E_d	ν	G_d
20 MPa	3 MPa	5 MPa	2700 kg/m^3	80	60 GPa	0.3	23

Table 2 - Rock Mass Strength and Stiffness Properties

Table 2 also provides the rock mass rating (RMR), a geomechanical classification system for rocks, where an algebraic sum of the ratings for all parameters offers valuable information about the rock mass quality. The equation from Bieniawski, 1989, for rocks with an RMR of 60 or higher is as follows.

$$E_d = 2\,RMR - 100$$

Additionally, the shear stiffness was determined using the following equation from the elastic theory.

$$G_d = \frac{E_d}{2(1+\upsilon)}$$

Adjustments for Joint Persistence and Resistance

As previously mentioned, the adjustment of persistence and resistance of joints needs to be taken into acccount. Joint persistence describes the continuity of the joints and consequently affects the overall stability. Resistance adjustments ensure that weathering and mechanical damage are considered in the mechanical properties of the joints.

$$j_{kn} = \frac{E_d}{s}$$

$$j_{ks} = \frac{G_d}{s}$$

A simplified calculation was carried out, which is accurate for orthogonally intersecting joint families, using the two equations above for the normal and shear joint stiffness to model the rock's deformability.

$$j_{coh} = c\,(1 - k)$$

$$j_{ten} = \sigma_t\,(1 - k)$$

Since the pillar needs to be modelled with continuous joints, the cohesion and tensile resistance were estimated using the two equations above, respectively, to account for joint discontinuities, assuming there is no fill material (empty joints).

The results are in Table 3, where the joint friction angle was determined through laboratory testing.

Joint Family	j_{kn}	j_{ks}	j_{fri}	j_{coh}	j_{ten}
1	5 GPa/cm	1.92 GPa/cm	35°	50 kPa	30 kPa
2	4 GPa/cm	1.54 GPa/cm	40°	150 kPa	90 kPa
3	4 GPa/cm	1.54 GPa/cm	40°	150 kPa	90 kPa

Table 3 - Joint Parameters for the DEM model using 3DEC for the Rock Pillar

Task 1: Stability Analysis Using SRF

In this task three different cases are considered:

- **Case A:** SRF applied to all joint families;

- **Case B:** SRF applied only to joint family 1;

- **Case C:** SRF applied to joint families 2 and 3.

Each case helps to establish the most critical of the joint families and their effect on the stability of the rock pillar.

Case A

Starting from the default equilibrium configuration, a strength reduction factor is applied to all joint sets, lowering the friction angle (j_{fri}), cohesion (j_{coh}), and tensile resistance (j_{ten}) until an unstable condition is reached. Tables 4 and 5, list the default and adjusted parameters. Analysis shows that the rock mass remains stable up to a reduction factor of 1.3125; beyond this, a slight increase leads to failure, with several blocks starting to slide as showed in Figure 5.

Joint Family	j_{fri}	j_{coh}	j_{ten}
1	35°	50 kPa	30 kPa
2	40°	150 kPa	90 kPa
3	40°	150 kPa	90 kPa

Table 4 - Joint Default Parameter RF 1

Joint Family	j_{fri}	j_{coh}	j_{ten}
1	27.5°	37.2 kPa	22.3 kPa
2	32°	111.6 kPa	66.9 kPa
3	32°	111.6 kPa	66.9 kPa

Table 5- Joint Reduced Parameter RF 1.34375

It can be seen in Figure 5 that the order of magnitude of the velocity and of the displacement are extremely small, respectively around 0.54 and 1e-1, indicating a stable state. The equilibrium condition is lost with a minor decrease in joint resistance. Applying a reduction factor of 1.34375 results in failure (Figure 6). During

the failure process, the upper blocks formed by joint family 1 and the lower blocks formed by the intersection of all families begin to slide slowly until they fall. The final configuration without these blocks is shown in Figure 7.

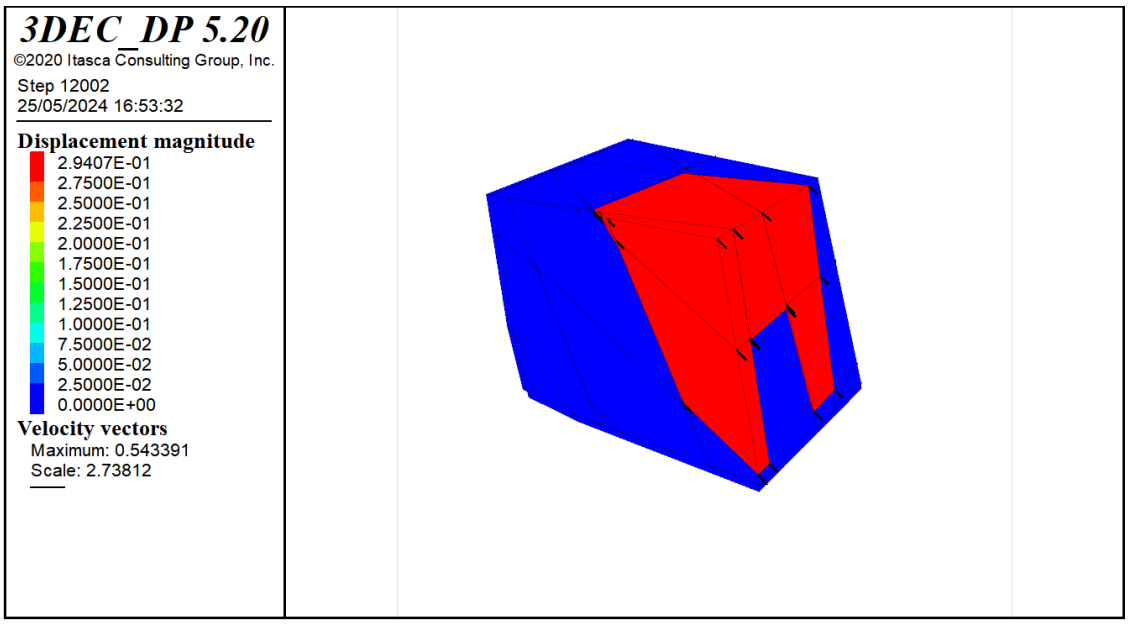

Figure 5 - Stable configuration of the rock mass associated to RF 1.3125

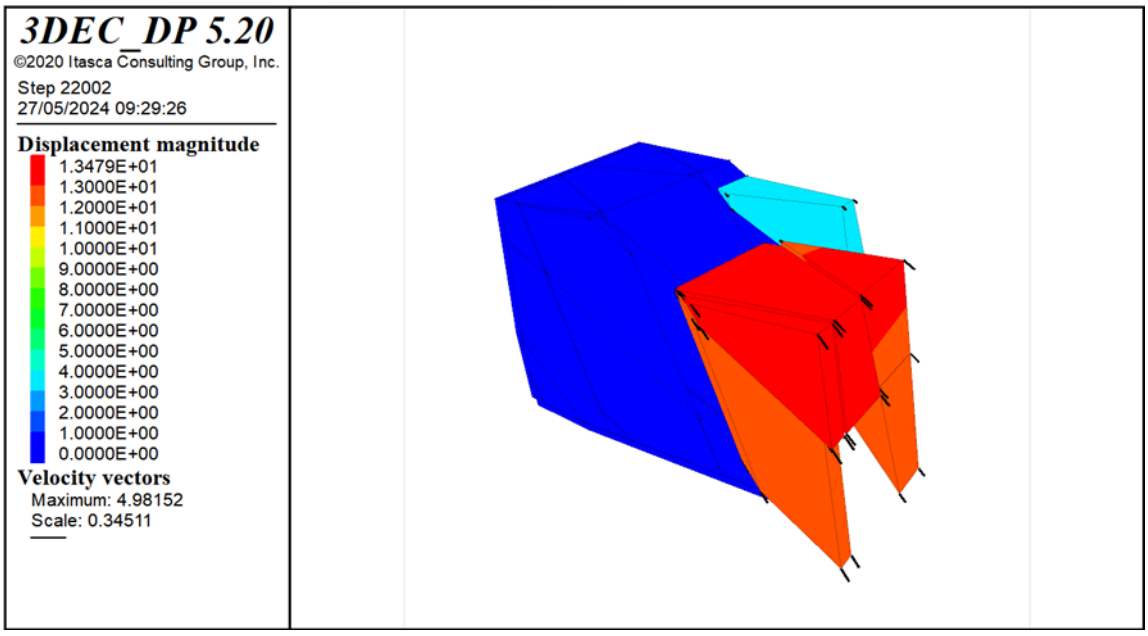

Figure 6 - First instability of rock mass associated to RF 1.34375

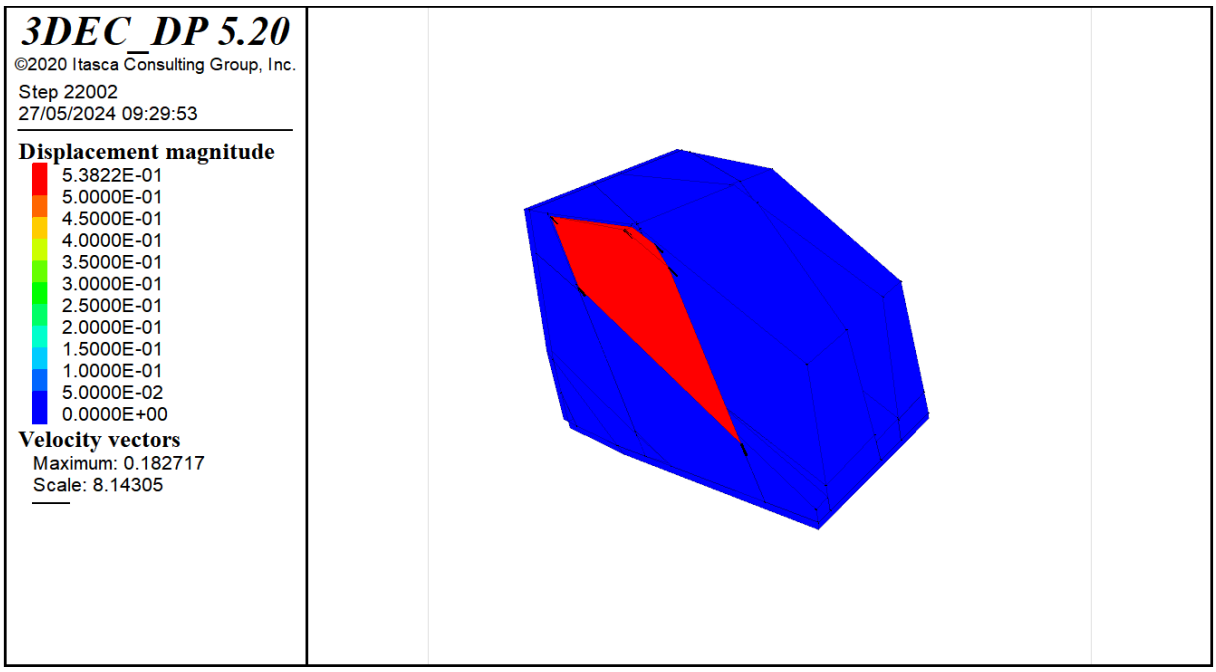

Figure 7 - Configuration post failure with RF 1.34375

Case B

In this case, the reduction is applied only to the parameters associated with joint family 1, which is the most critical because it is nearly parallel to the front face of the rock mass and it has an unfavourable inclination. With further reduction from the default values, the friction angle of joint family 1 becomes lower than its inclination, causing blocks along it to slide. However, a stable configuration is maintained up to a reduction factor of 1.625 (see Figure 8). Stability is confirmed by the maximum velocity being around 1e-18. When the reduction factor is slightly increased to 1.75, failure occurs starting from the previously stable configuration. The upper blocks formed by joint family 1, shown in Figure 9, begin to move slowly. As the analysis progresses, these blocks slip simultaneously with two lower blocks created by joint families 1 and 2. The post failure configuration without these blocks is shown in Figure 10.

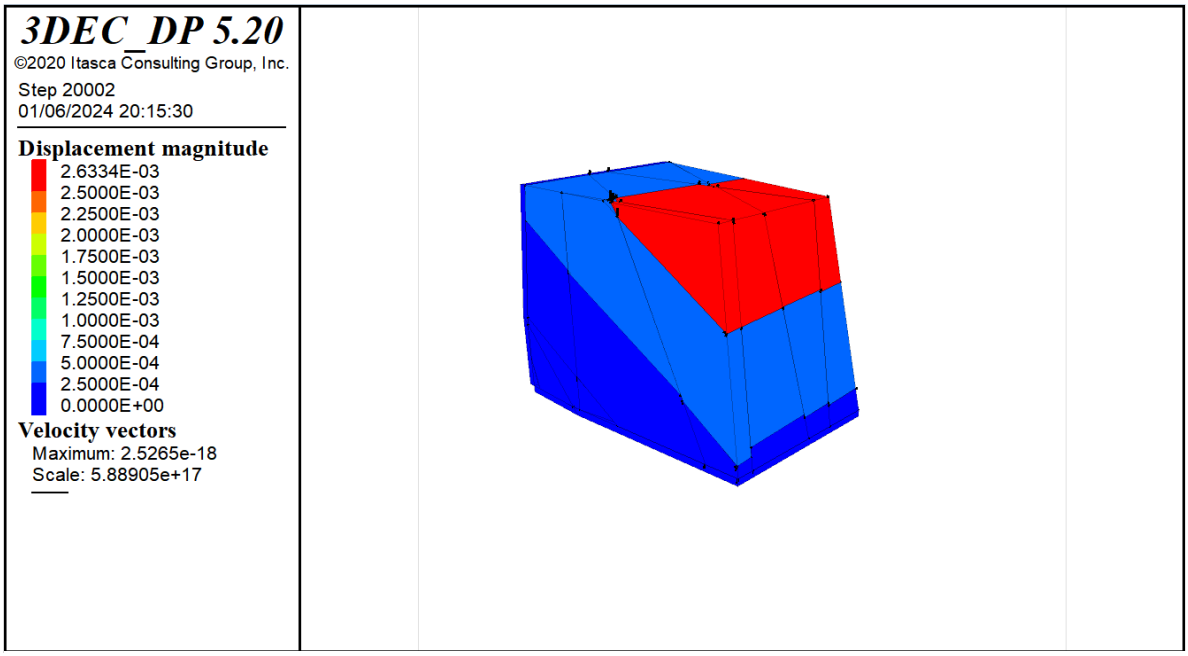

Figure 8 - Stable configuration of the rock mass associated to RF 1.625

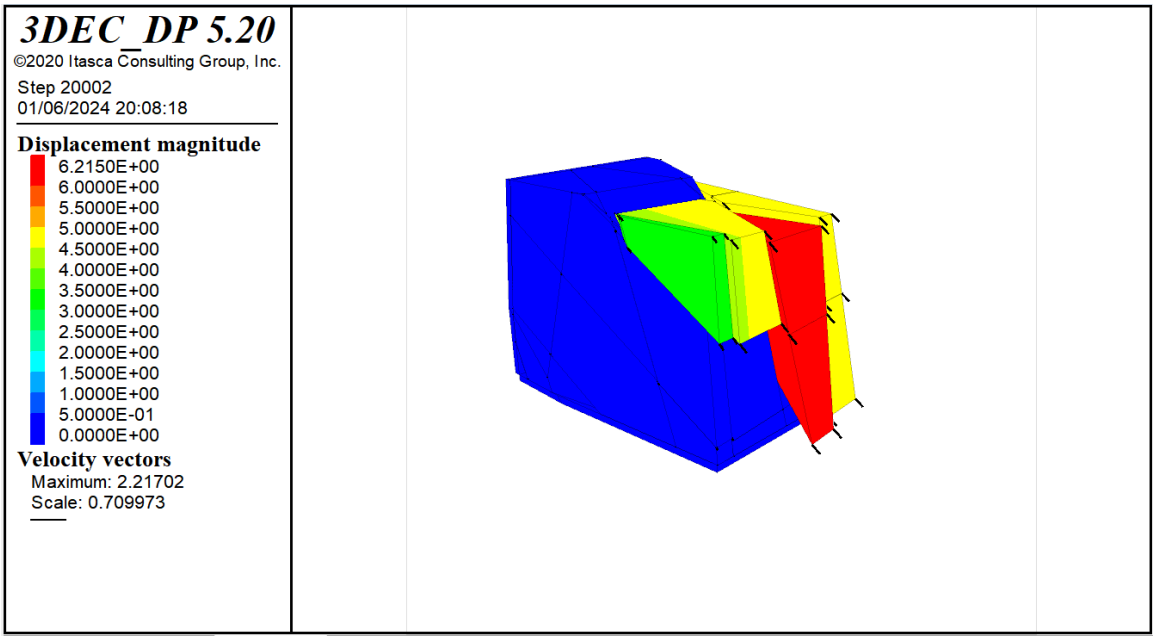

Figure 9 - First instability of the rock mass associated to RF 1.75

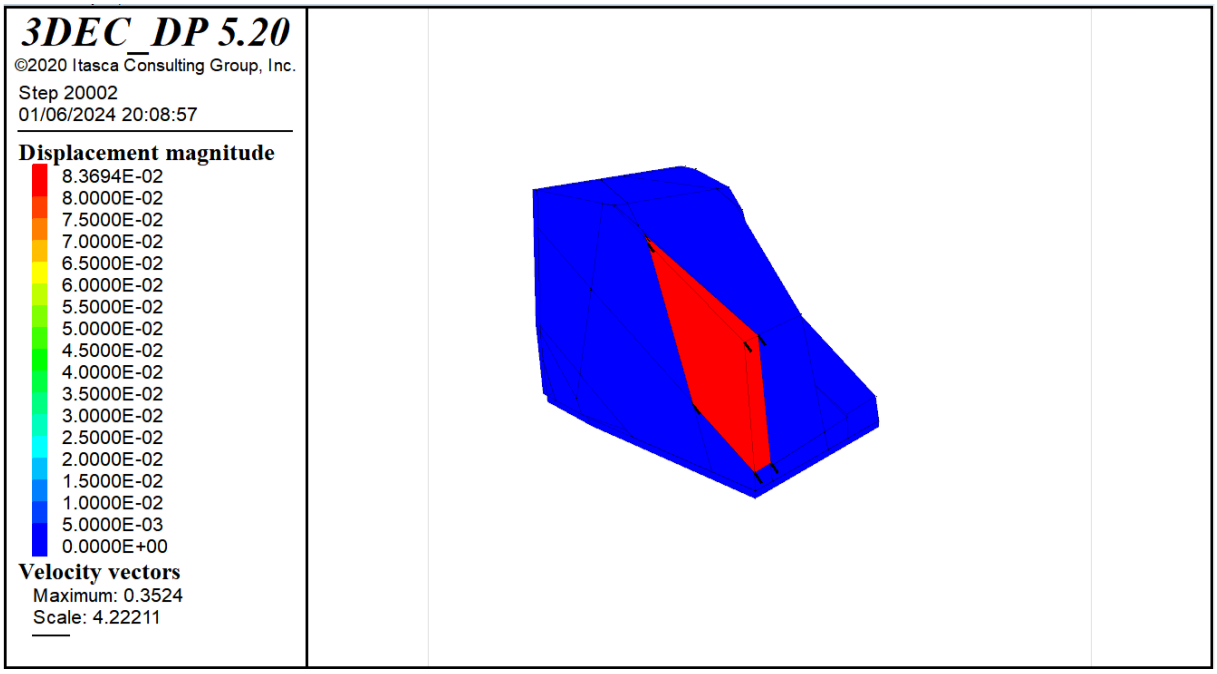

Figure 10 - Configuration post failure with RF 1.75

Joint Family	j_{fri}	j_{coh}	j_{ten}
1	23.31°	30.7 kPa	18.4 kPa
2	27.31°	92.3 kPa	55.4 kPa
3	27.31°	92.3 kPa	55.4 kPa

Table 6 – Joint reduced Parameters with RF 1.625

Case C

The application of the reduction factor to joint families 2 and 3 does not alter the state of the rock mass. Figures 11 and 12 show the results of the analysis for various reduction factors. Despite the significant variation of the RF, stability is maintained, as seen from the very low maximum velocity, around 1e-18 and the negligible displacements. In this case, only the stable configuration is analysed, as no failure occurs. This analysis indicates that the instability of the rock mass does not depend on the resistance of the two subvertical joint families.

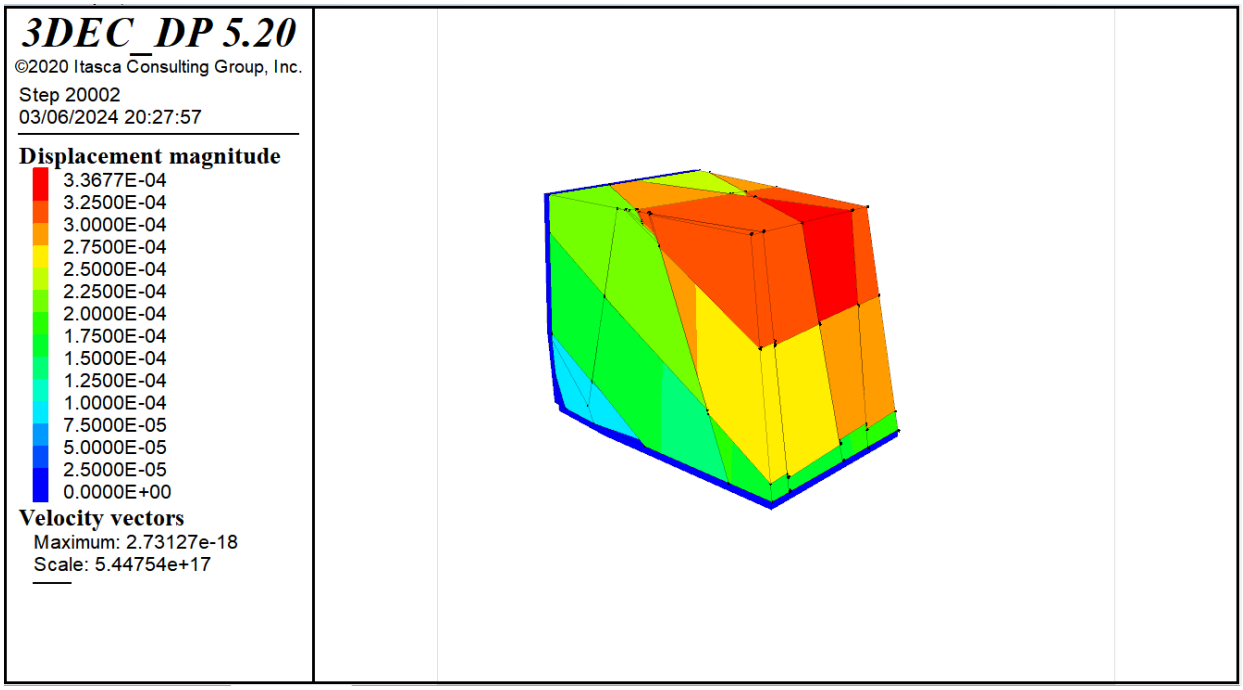

Figure 11 - Stable configuration of the rock mass associated to RF 1

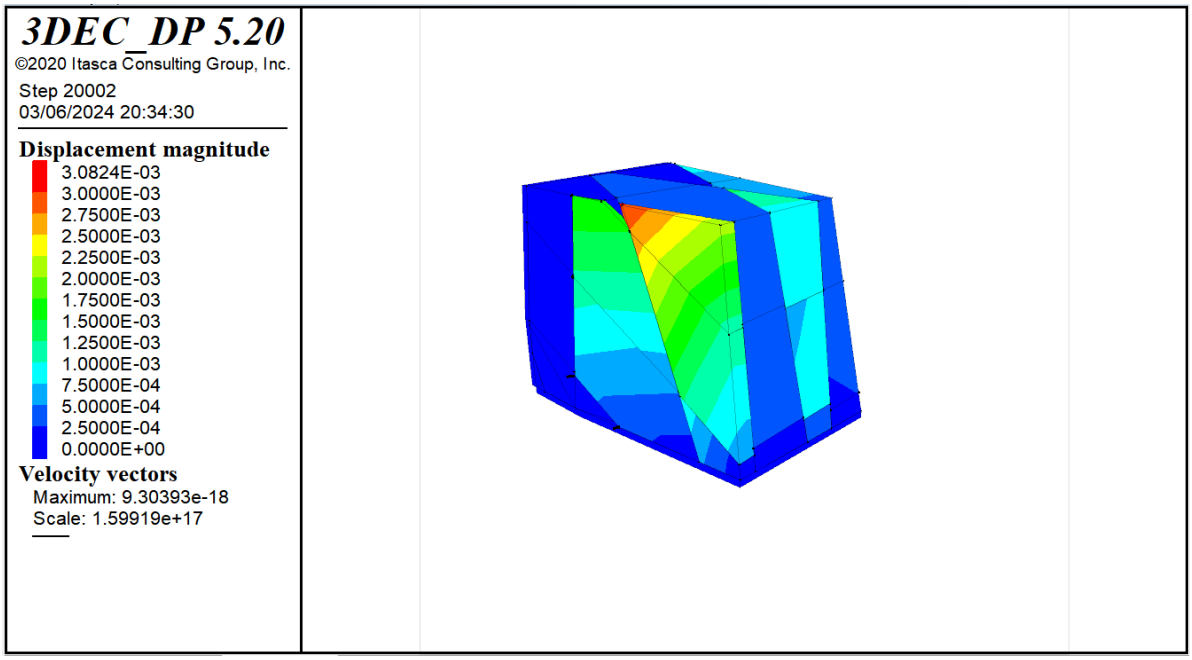

Figure 12 - Stable configuration of the rock mass associated to RF 8

Joint Family	j_{fri}	j_{coh}	j_{ten}
1	5°	6.25 kPa	3.75 kPa
2	6°	18.8 kPa	11.3 kPa
3	6°	18.8 kPa	11.3 kPa

Table 7 - Joint reduced Parameters with RF 8

Overall, the values of the strength reduction factors that lead to instability, in all cases, are summarized in Table 8, along with the corresponding reduced parameters.

Case	RF	Joint Family	j_{fri}	j_{coh}	j_{ten}
A	1.34375	1	27.5°	37.2 kPa	22.3 kPa
		2	32°	111.6 kPa	66.9 kPa
		3	32°	111.6 kPa	66.9 kPa
B	1.75	1	21.81°	20.5 kPa	17.1 kPa
		2	25.62°	85 kPa	51.4 kPa
		3	25.62°	85 kPa	51.4 kPa
C	/	/	/	/	/

Table 8 - Summary of values of RF that lead to Instability

Task 2: Reinforcement Design

A rock mass can undergo a progressive decay of its mechanical properties due to weathering or fragmentation of the joints and can therefore be susceptible to failure mechanisms that can result in landslides. However, it's possible to strengthen a rock mass by designing an adequate reinforcement system which improves the stability and load carrying capacity.

In this case, a reinforcement system was designed to stabilize the rock pillar considering a SRF=2 for all joint families. The type of reinforcement considered is bolts grouted into the rock.

The procedure that was followed was to first of all model the rock pillar with SRF=2. Then the collapse mechanism was analysed to identify the blocks that were falling and that needed to be reinforced.

Design of the reinforcement

Table 9 summarizes the reduced mechanical parameters for the joint families.

Joint Family	j_{fri}	j_{coh}	j_{ten}
1	19.3°	25 kPa	15 kPa
2	22.8°	75 kPa	45 kPa
3	22.8°	75 kPa	45 kPa

Table 9 - Joint reduced Parameters with RF 2

In Figure 13 can be seen the configuration of the unstable rock mass after running 12000 cycles in the software.

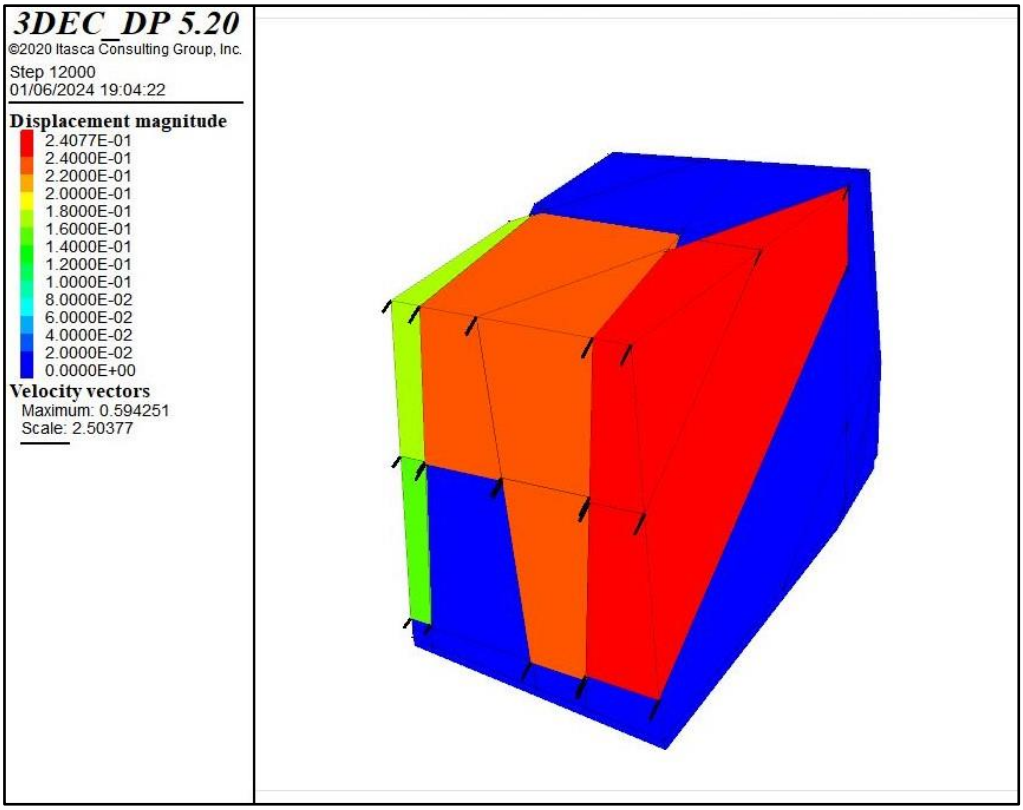

Figure 13 - Rock Mass Instability associated to RF 2 for Case A

Now that the unstable blocks have been identified the reinforcement can be designed.

The mechanical properties of the reinforcement were provided by the manufacturer. Specifically, the ultimate axial capacity was set to 1.5 MN and the ultimate shear capacity was set to 0.75 MN.

The initial analysis was performed in elastic conditions, which means setting the values of the axial and shear forces for the bolts three orders of magnitude higher than the ultimate values provided by the manufacturer, in order to have an idea of the order of magnitude of the forces required to stabilize the system.

The preliminary configuration of the reinforcement is shown in Figure 14.

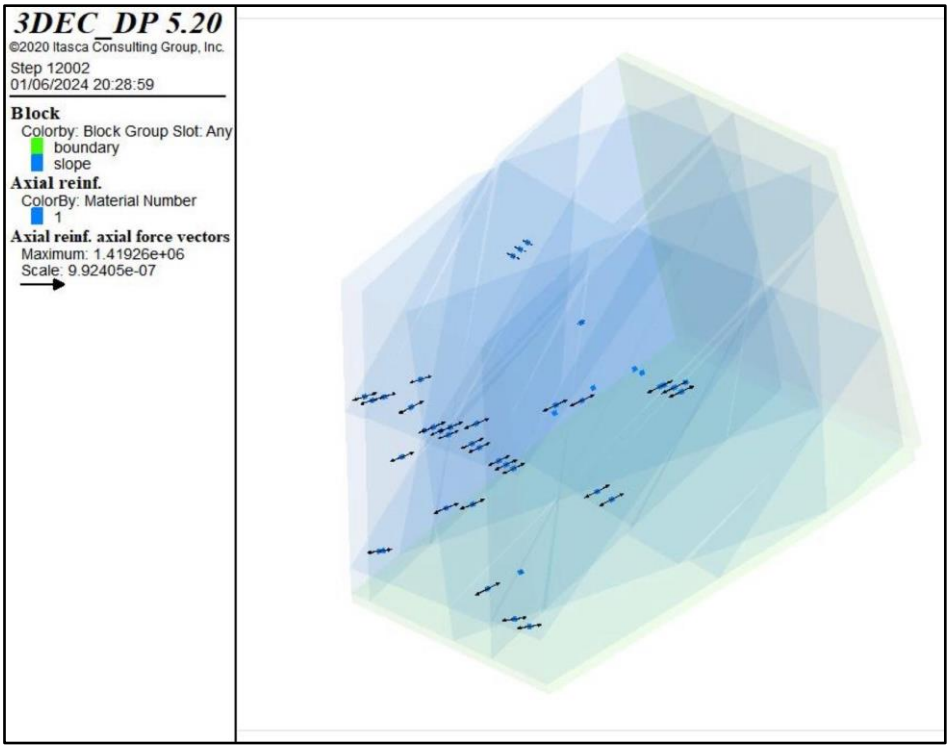

Figure 14 - Initial Rock Bolts Configuration

As it can be seen in the figure, the maximum axial force exceeded the limiting value which was provided. Hence, the reinforcement was increased and optimized.

Also, it should be known that the software 3DEC considers the reinforcing bars acting only in the places where they intersect the joints.

Finally, the elastic hypothesis was removed and the final configuration of the reinforcement was obtained (Figure 15).

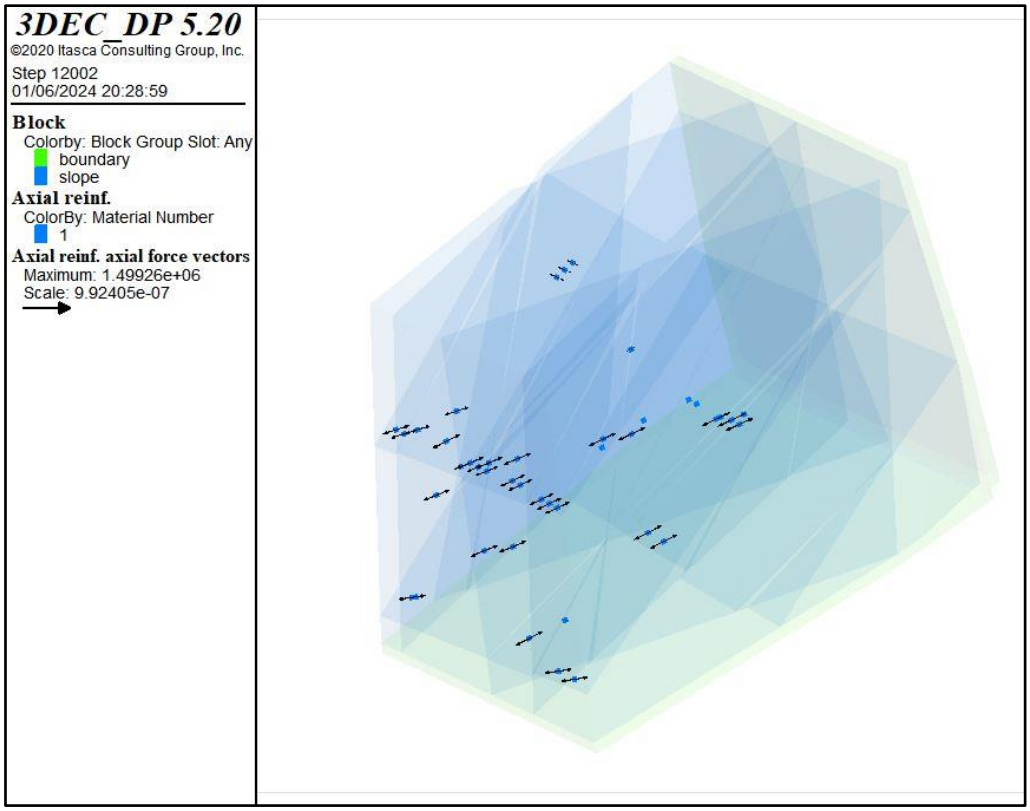

Figure 15 - Final Rock Bolts Configuration

From the figure it can be observed that the maximum axial force has now a value of 1.4 MN which is lower than the limit.

The code of the reinforcement is shown in Figure 16.

```
; Lower bolts
;left
structure axial (-10 0 5) (-10 5 2.5) property 1
; centre
structure axial (3 0 5) (3 15 2.5) property 1
; right
structure axial (8 0 5) (8 5 2.5) property 1
structure axial (10 0 5) (10 5 2.5) property 1

;Mid height bolts
;left
structure axial (-10 0 12.5) (-10 10 10) property 1
;centre
structure axial (1 0 12.5) (1 10 10) property 1
structure axial (0 0 12.5) (0 10 10) property 1
;right
structure axial (10 0 12.5) (10 15 10) property 1
structure axial (8 0 12.5) (8 15 10) property 1

;Top bolts
;left
structure axial (-9 0 20) (-9 15 15) property 1
structure axial (-10 0 20) (-10 15 15) property 1
structure axial (-4.5 0 20) (-4.5 30 15) property 1
;centre
structure axial (-1 0 20) (-1 20 15) property 1
structure axial (0 0 20) (0 20 15) property 1
structure axial (1 0 20) (1 20 15) property 1
structure axial (4 0 20) (4 25 15) property 1
structure axial (5 0 20) (5 25 15) property 1
;right
;structure axial (11 0 20) (11 25 15) property 1
structure axial (10 0 20) (10 25 15) property 1
structure axial (9 0 20) (9 25 15) property 1
structure axial (8 0 20) (8 25 15) property 1

;LATERAL BLOCK
structure axial (-15 25 20) (-10 25 20) property 1
structure axial (-15 26 20) (-10 26 20) property 1
structure axial (-15 24 20) (-10 24 20) property 1
```

Figure 16 - 3DEC Code for the Rock Bolts Coordinates

In Figure 17 it can also be seen how the reinforcement significantly reduces the displacements of the blocks that were once unstable and thus it can be concluded that it's efficient.

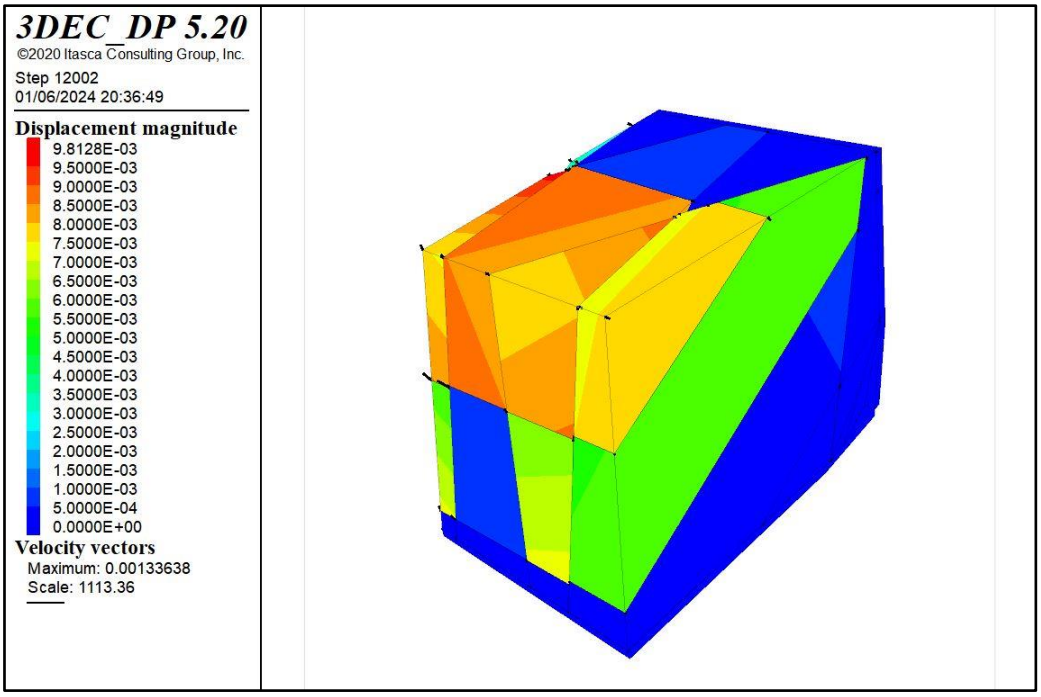

Figure 17 - Displacement and Velocity Fields of the Reinforced Block

Furthermore, it should be put in evidence that an additional lateral reinforcement was added in order to stabilize a block on the left-hand side which we noticed was very unstable when performing the elastic analysis.

Discussion of the results

After having developed the first task it was evident that the critical joint family was family 1, since the rock mass resulted unstable when applying the reduction factors to all the families (case A) and to family 1 only (case B), whereas when applying the reduction factors only to family 2 and 3 (case C) the rock mass was always stable. Therefore, the joint family 1 is the most dangerous one. This is because this family of joints has an average dip direction close to the one of the slope and thus the plane sliding phenomenon can occur.

Moreover, it is known that when the dip angle is close to the joint friction angle or to 90° the behaviour of the rock mass is given by the rock, whereas when it's in between these values then the behaviour of the rock mass is given by the joint and so it's lower. In this case study, the joint friction angle of family 1 is 35° while the dip angle is 30° so since they're close to each other the behaviour is given by the rock. However, when the reduction factor is applied the friction angle is reduced and the difference between the two angles increases resulting in the behaviour being determined by the joint, which reduces significantly the resistance of the rock mass. Conversely, the joint friction angle for both family 2 and 3 is 40° while the dip angle is respectively 80° and 85°. Since the dip angle is close to 90° the behaviour of the rock mass is determined by the rock, even after the friction angles are reduced. This is why in case C the configuration is always stable.

Given all these considerations it's evident why it was important, in this case, to design an adequate reinforcement to improve the stability and the load carrying capacity.