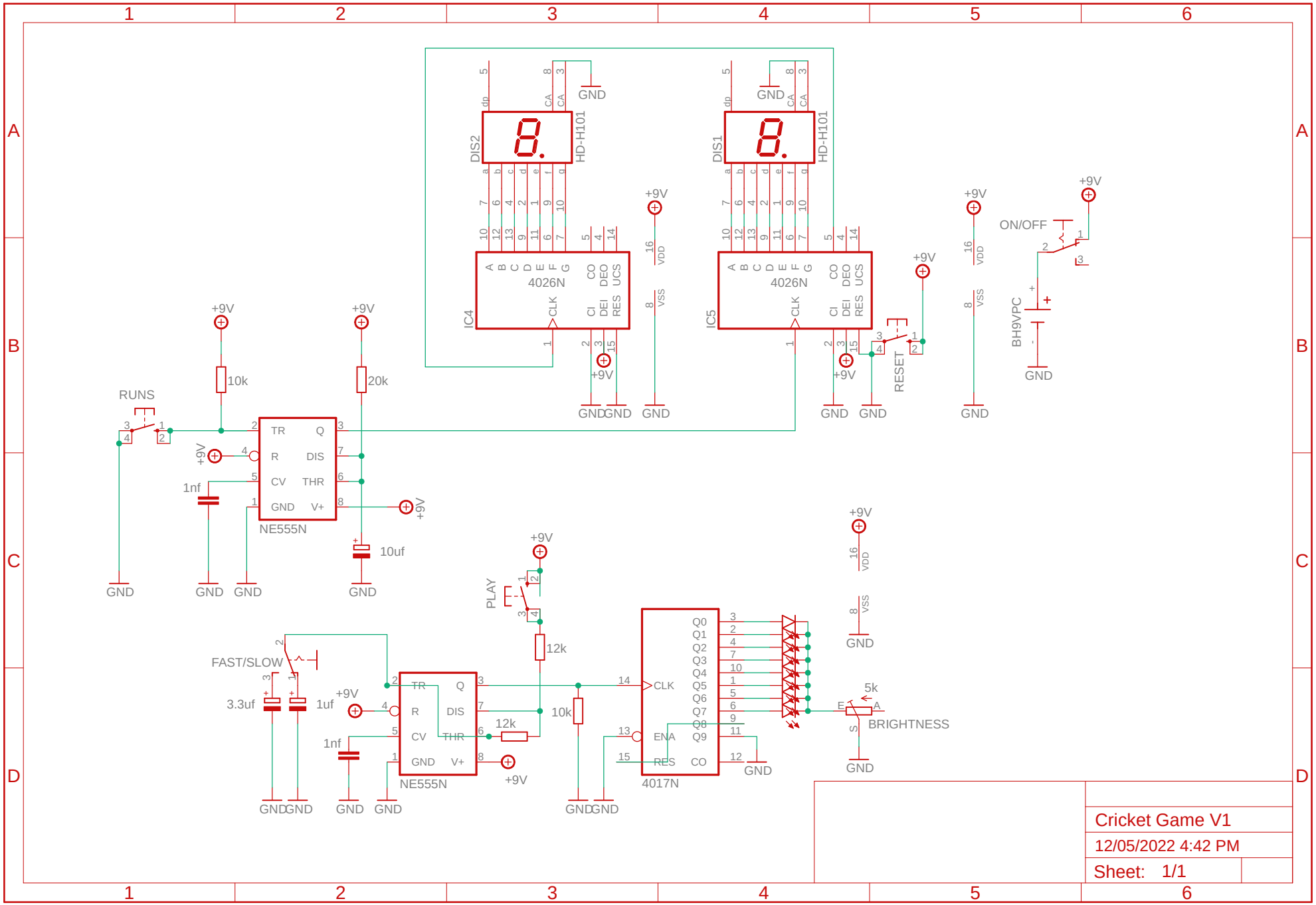

12/05/2022 4:43 PM C:\Users\marcus\Documents\EAGLE\projects\Cricket Game\Cricket Game V1.sch (Sheet: 1/1)