# ENGS 26 Final Project Report

Duck Car No. 3

DARTMOUTH
ENGINEERING
THAYER SCHOOL

May 29, 2024

Hannah Chipman & Charité Igirimbabazi

# Table of Contents

**1. System Modeling** ..... **3**
a. Sensor Characterization ..... 3
b. Motor characterization ..... 6
c. Uncompensated System Transfer Functions and Block Diagram ..... 8
**2. Stability Analysis of the Uncompensated System** ..... **8**
**3. Compensator Specifications & Rationale** ..... **10**
**4. Compensator Design using Root Locus and/or Frequency Domain Methods** ..... **10**
**5. Compensator Implementation** ..... **13**
**6. Experimental Verification** ..... **15**
**7. Conclusion and Reflections** ..... **18**
**8. Appendices** ..... **19**
A. Sensor Characterization Data ..... 19
B. Motor Characterization Data Analysis Code (MATLAB) ..... 20
C. Compensated System Step Response Tracker Data Analysis Code (MATLAB) ..... 22

## 1. System Modeling

The two general methods we considered for characterizing our duck car system were a time-domain analysis and a frequency-domain analysis. Time-domain methods analyze the time-domain response of the motor-car system to a step voltage input, where the response is measured via position and velocity gathered on the car as it accelerates to a steady state velocity, and these data are used to determine the time constant and gain of the motor by modeling the system as a first order exponential step response, and disregarding nonlinear factors such as friction. A frequency-domain analysis would be performed by running the motor off a constant-amplitude sine wave input, varying the frequency, and recording the peak velocity at each frequency as well as the offset of this peak compared to the corresponding peak on the input sine wave. From these data, we could then create a bode plot of the velocity response and identify the motor gain and time constant from the initial magnitude and location of the system pole, again modeling the motor-car system as first order and disregarding nonlinear effects. At low frequencies ($\omega$ close to zero) the magnitude will be approximately equal to the bode gain of the motor.

### a. Sensor Characterization

The initial step of this project was to characterize the infrared sensor (Sharp 2y0A21) used on the duck car. The calibration process involved determining the relationship between the output voltage of the sensor and the distance from the duck car to some sort of obstacle. In this project, a free standing first-aid kit was used to simulate the obstacle, and it was moved along a fixed meter stick measuring the distance from the front wheels of the duck car to the near face of the first aid kit (Figure 1). In this manner, we collected sensor voltage data for a range of known distances along a straight path for calibration.

*Figure 1: Experimental Step up for Sensor Calibration*

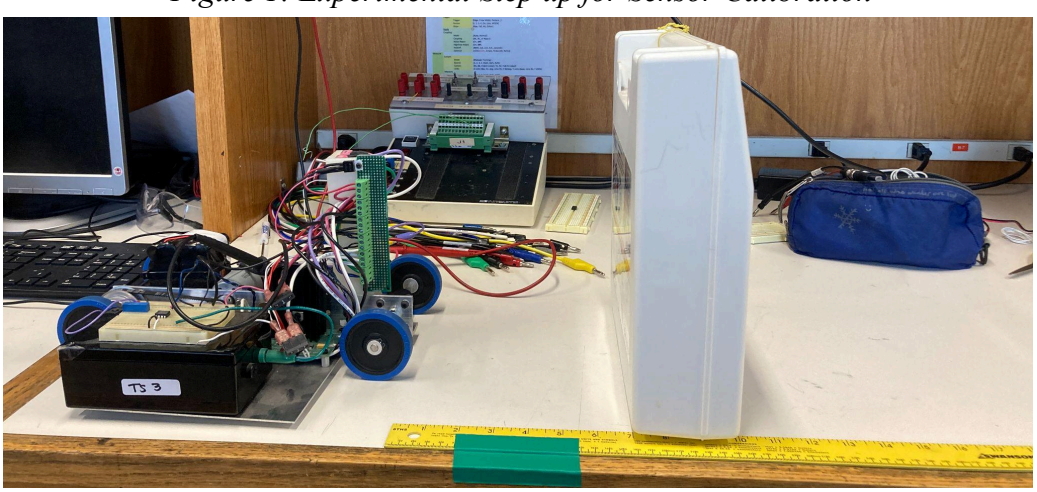

Our sensor output voltages, measured using the benchtop voltmeter, are shown in Figure 2. We used these data to develop a linear model to accurately characterize the sensor's behavior at a chosen operating point, which allows us to more precisely control the duck car's operation.

*Figure 2: Sensor output voltage as a function of distance between the duck car front wheel and free standing first aid kit*

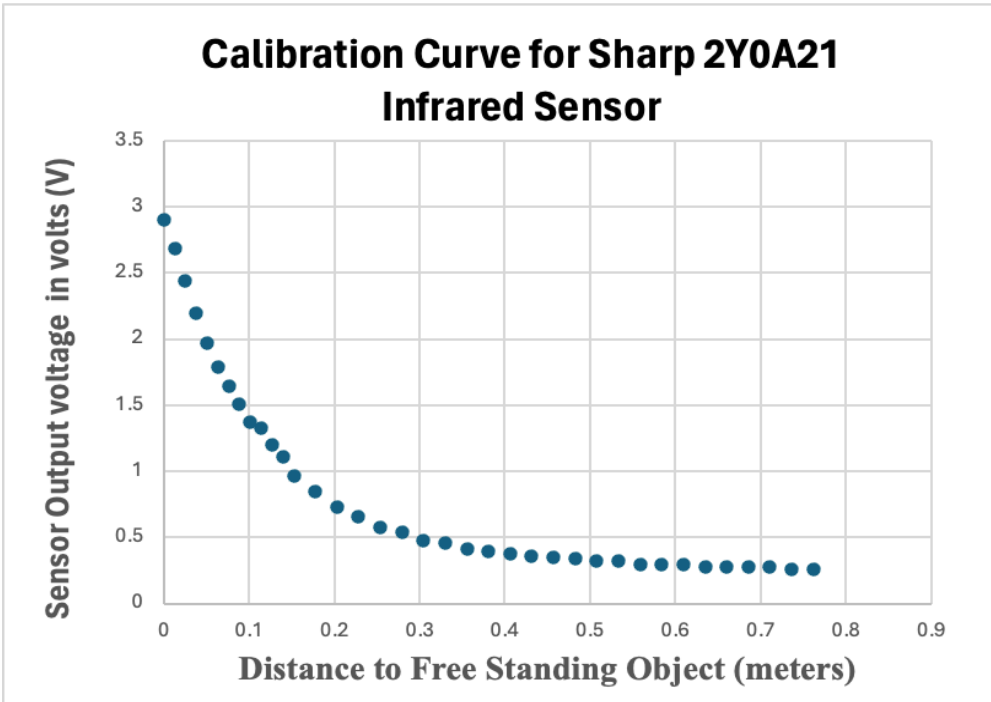


In order to develop an accurate linear model for use in our system analysis, we first constructed a nonlinear model (Figure 3) to fit the sensor characterization data, in order to more easily calculate a linearization of the sensor characteristics around a chosen operating point. Based on our sensor calibration data, we chose an operating point at 0.14 meters corresponding to a 1.1 V reference sensor voltage. A linear model for the sensor at that operating point was calculated by finding the slope of the tangent line to the sensor data in Figure 2, as modeled by our nonlinear model in Figure 3. We calculated this slope to be -6.8 $\frac{V}{m}$, which can also be verified visually on the plot by calculating the slope of the tangent line using x and y-intercepts The magnitude of this value represents the gain of the sensor ($K_S = 6.8\frac{V}{m}$).

*Figure 3: Nonlinear model (black curve) and linear model (blue line) for sensor calibration data at our chosen operating point.*

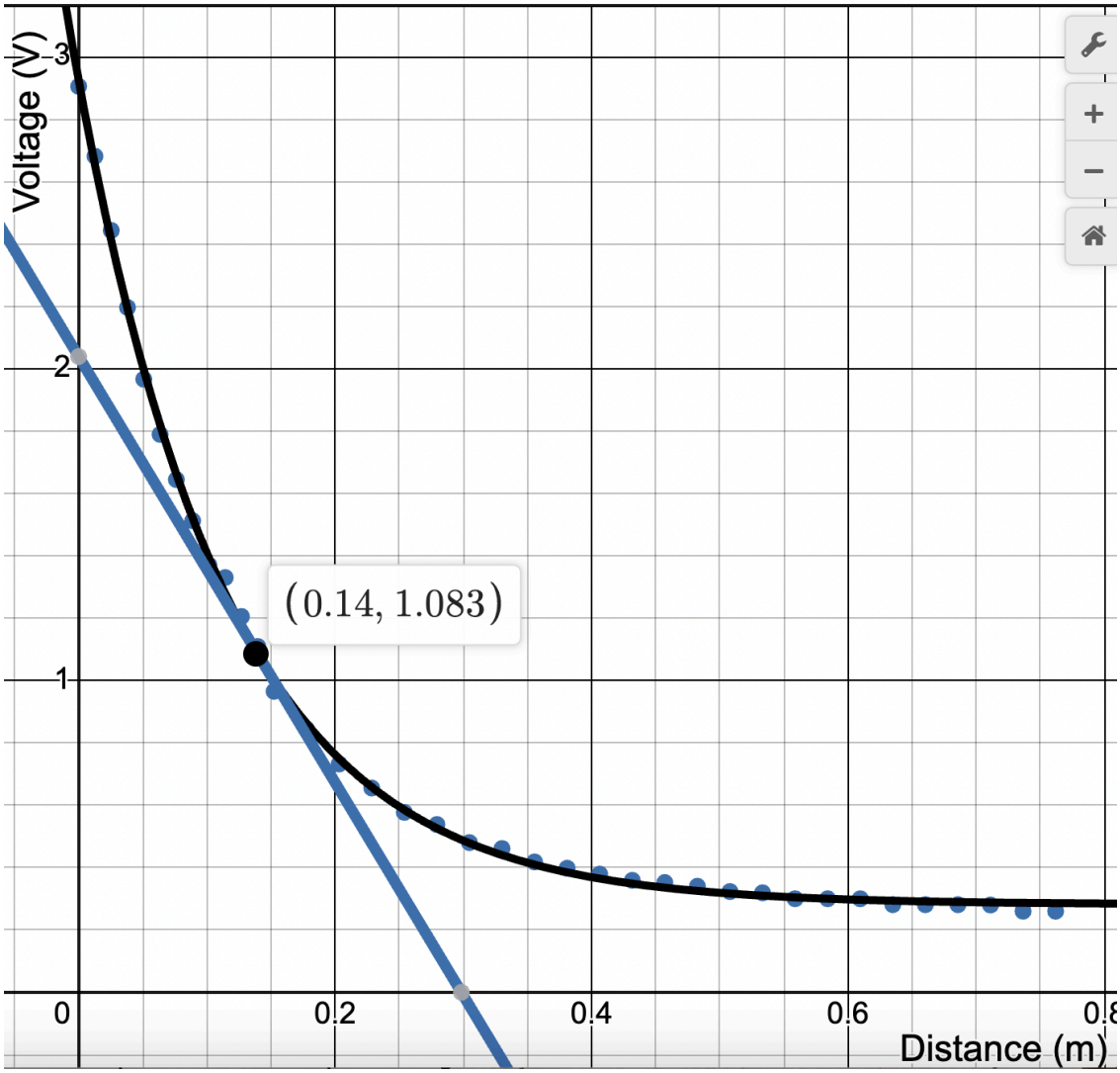


### b. Motor characterization

To characterize our duck car's motor, we recorded and analyzed the car's response to a step input reference voltage. Tracker, a video analysis software, was used to track the car's motion (based on a high-contrast target attached to the top of the car) and extract the position and velocity data. The step input (reference) voltages were varied by adjusting the potentiometer, and we ran tests of the car for 3V, 4V, and 5V input voltages, switching the motor on to initiate the step response, and letting the duck car run the width of the Maclean atrium. Approximating the motor-car system as first order, the position and velocity data from Tracker video analysis were used to determine the gain of the motor, $K_m$, and the time constant, $\tau$, which characterize the motor's transfer function. Since the width of the atrium did not allow for a sufficient duration of steady

state operation and 4 and 5 V inputs, and increasing path curvature and noise impacted our data as the car approached steady-state velocity, we used an exponential curve fit to extrapolate the steady state velocity for our motor at each input voltage. The motor gain $K_m$ was determined from the extrapolated steady-state velocity divided by the magnitude of the input voltage, while the time constant, τ, represents the time it takes for the velocity to reach approximately 63.2% of its final, extrapolated value. Both of these calculations were incorporated into the model fitting code, which can be seen in more detail in Appendix B.

*Figure 4: Tracker Data Analysis Summary*

3V Motor Step Response & First-Order Model

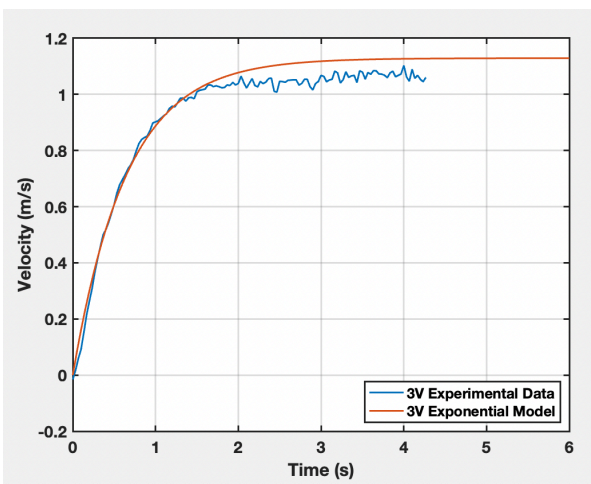


3V Regression Model Statistics

```
Nonlinear regression model:
    y ~ c1*3*(1 - exp( - 1*x/c2))

Estimated Coefficients:
          Estimate       SE         tStat       pValue
          ________    _________    ______    __________

    c1    0.37638     0.0043124    87.279    1.5167e-54
    c2     0.6484      0.017314    37.449    3.4654e-37


Number of observations: 50, Error degrees of freedom: 48
Root Mean Squared Error: 0.0221
R-Squared: 0.995,  Adjusted R-Squared 0.995
F-statistic vs. zero model: 3.05e+04, p-value = 3.06e-75
```

Interpretation:

$K_m = 0.37638 \frac{m/s}{V}$

$\tau = 0.6484\ s$

4V Motor Step Response & First-Order Model

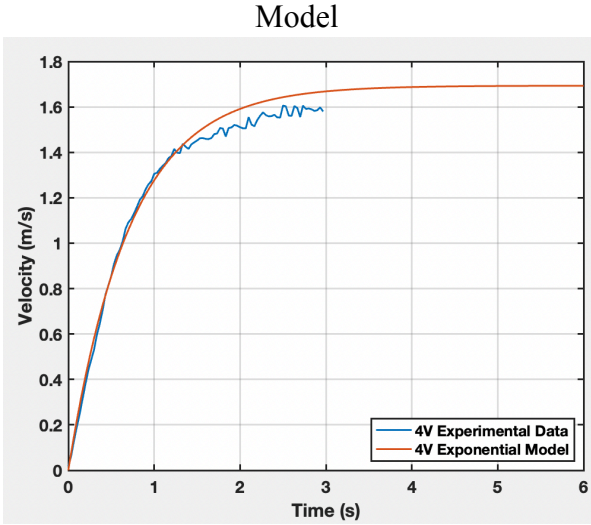


4V Regression Model Statistics

```
Nonlinear regression model:
    y ~ c1*4*(1 - exp( - 1*x/c2))

Estimated Coefficients:
          Estimate       SE        tStat       pValue
          ________    ________    ______    __________

    c1    0.42338      0.00517    81.892    9.7731e-50
    c2    0.71308     0.018074    39.454    5.5625e-36


Number of observations: 46, Error degrees of freedom: 44
Root Mean Squared Error: 0.0255
R-Squared: 0.997,  Adjusted R-Squared 0.997
F-statistic vs. zero model: 4.04e+04, p-value = 1.56e-72
```

Interpretation:

$K_m = 0.42338 \frac{m/s}{V}$

$\tau = 0.71308\ s$

5V Motor Step Response & First-Order Model

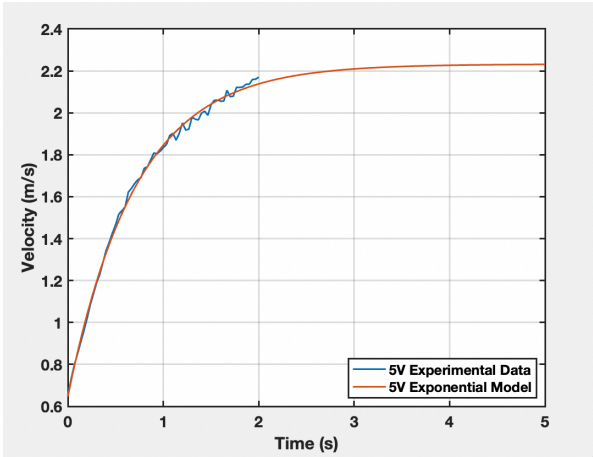


5V Regression Model Statistics

```
Nonlinear regression model:
    y ~ c1*5*(1 - exp( - 1*(x - c3)/c2))

Estimated Coefficients:
          Estimate       SE          tStat       pValue
          ________    _________    _______    __________

    c1     0.44649    0.0020622     216.51     4.834e-86
    c2     0.70872     0.014062       50.4    1.3718e-49
    c3    -0.24244     0.007428    -32.639    5.0607e-39

Number of observations: 61, Error degrees of freedom: 58
Root Mean Squared Error: 0.02
R-Squared: 0.998,  Adjusted R-Squared 0.998
F-statistic vs. zero model: 1.55e+05, p-value = 3.84e-113
```

Interpretation:

$K_m = 0.44649 \frac{m/s}{V}$

$\tau = 0.70872\ s$

*Figure 5: Summary Table of Calculated Motor Characteristics Based on Tracker Analysis*

| Step Input Voltage | Calculated Motor Gain $K_m$ ($\frac{m/s}{V}$) | Calculated Motor Time Constant τ (s) |
|---|---|---|
| 3V | 0.37638 | 0.6484 |
| 4V | 0.42338 | 0.71308 |
| 5V | 0.44649 | 0.70872 |
| Average | 0.41542 | 0.6901 |
| 4 & 5V Average | 0.43494 | 0.7109 |

### c. Uncompensated System Transfer Functions and Block Diagram

The transfer function of the motor system used in this project describes the relationship between the input voltage, and the output velocity of the duck car, The transfer function of the motor was represented by a first order system in the frequency domain as follows:

$$G_m(s) = \frac{V(s)}{U(s)} = \frac{K_m}{\tau s + 1}$$

Where:

- $G_m(s)$ is the transfer function for the motor system
- U(s) is the laplace transform of the input voltage

- V(s) is the laplace transform of the output velocity
- $K_m$ is the motor system gain
- $\tau$ is the time constant of the system

The system parameters we determined from the sensor and motor characterization experiments (see above) are as follows:

- $K_m$ = 0.435 m/s/V, is the motor system gain
- $\tau_m$ = 0.7109 s, is the time constant of the motor
- $K_s$ = 6.8 V/m, is the gain of the sensor at the chosen operating point

Including these parameters, the closed loop uncompensated system can be modeled by the block diagram below, where an additional integrating term has been added into the motor transfer function to account for the transition from motor velocity output to position sensor input.

*Figure 6: Uncompensated System Block Diagram*

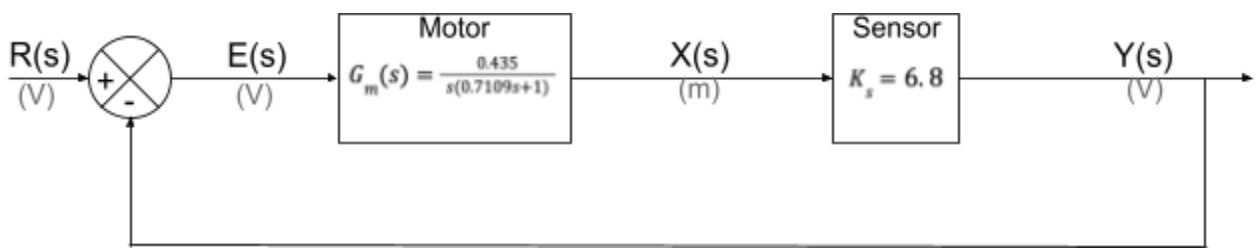


## 2. Stability Analysis of the Uncompensated System

To assess the stability and performance of the uncompensated system, the system was analyzed using both time domain and frequency domain methods provided by the Sisotool feature in matlab. For this analysis, we combined the motor transfer function and sensor gain into a single transfer function with the error signal as input and the sensor voltage (corresponding to car position) as output.

$$G_{ms}(s) = \frac{2.958}{s(0.7109s + 1)}$$

In the frequency domain analysis, the bode plot was generated to evaluate the gain and phase margins. The magnitude and phase plots confirmed a positive gain margin (GM = ∞) and a positive phase margin (PM = 37.8º), indicating stability. In the time domain analysis, the step response of the system was evaluated to assess transient characteristics such as peak overshoot and settling time. The peak overshoot was recorded to be 31.5% (with a $\varsigma \simeq 0.4$), indicating an underdamped system. The settling time of the uncompensated system was determined to be ≃ 5.4s. The steady state error was calculated to zero since the uncompensated system is a type I system.

*Figure 7: Sisotool Analysis of  Uncompensated System*

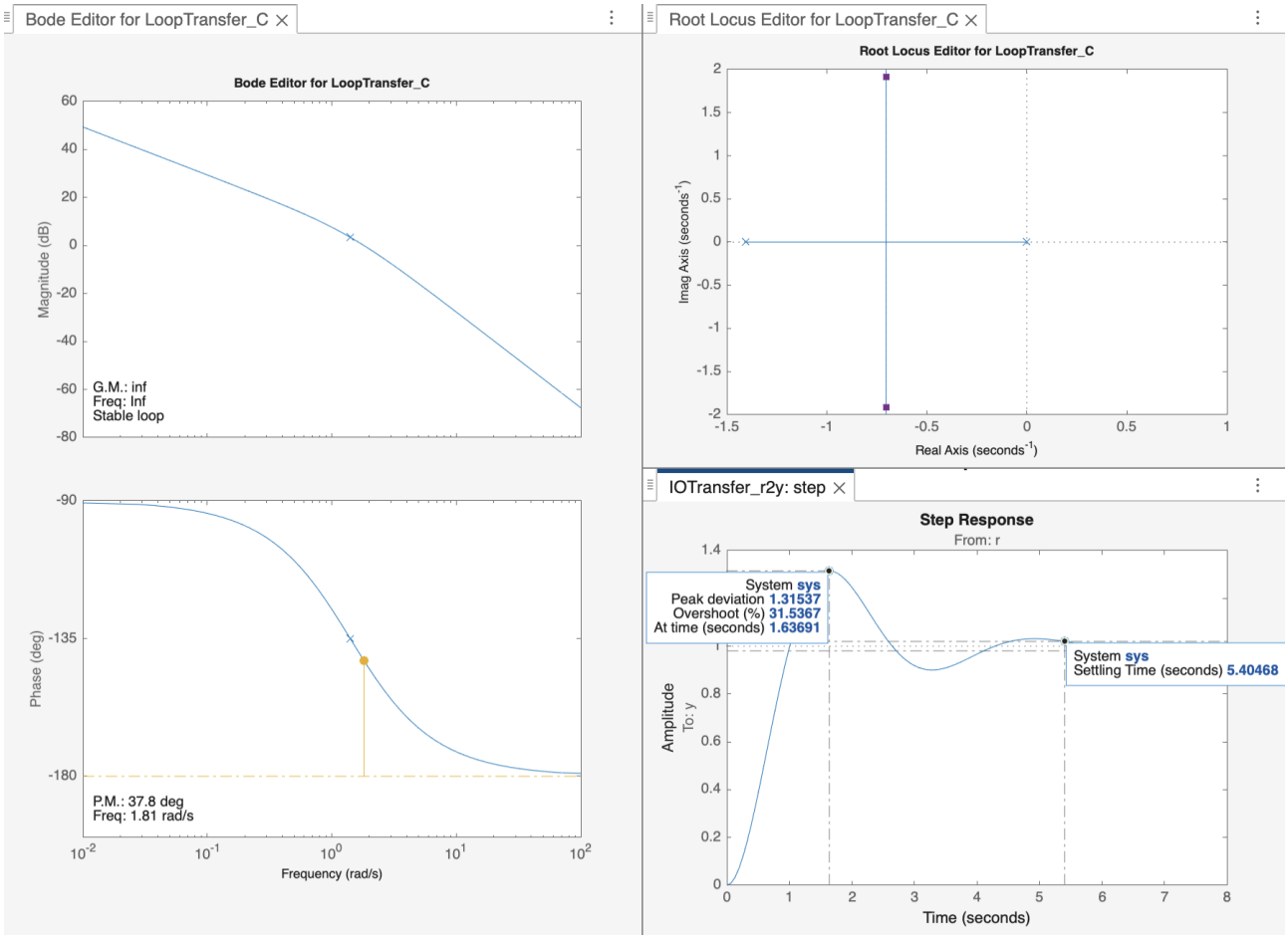


Although the positive values of phase and gain margin indicate stability of the system, the main goal of the project is to design a compensator for the duck car so that it can behave as a quasi-autonomous car. Thus, the duck care must have the ability to stop effectively when an obstacle is detected. The large peak overshoot and oscillatory (underdamped) behavior of the uncompensated system creates a significant risk of collisions and slow response times. Therefore, to achieve the autonomous behavior of the duck car, a compensator that reduces overshoot (creates a well-damped system) and increases response time is needed to ensure that the car can stop promptly and accurately.

## 3. Compensator Specifications & Rationale

The designed parameters for the control system were chosen based on the stability analysis of the uncompensated system. Since the initial peak overshoot was determined to be around 31% indicating an underdamped system, one of the important specifications for our compensator was to minimize the peak overshoot. We chose **a peak overshoot of less than 5%** to afford a high **damping ratio,** $\varsigma > 0.7$ , getting a well-damped system that minimizes the initial oscillatory behavior of the system. In addition, **the settling time was designed to be less than 1s** to ensure a much quicker response of the compensated system. These two specifications were to ensure that the car responds quickly and smoothly when an obstacle is detected.

Our system must also be able to reject disturbances and allow for uncertainties in modeling. To this end, we aimed to achieve a gain margin **of at least 6 dB and phase margin of at least 45º** to prevent nonlinearities and external disturbances from destabilizing the system. If we were able to easily meet all of our other specifications, we also planned to try to increase system bandwidth to the extent possible. However, we do not anticipate high frequency oscillatory inputs to be a particularly likely scenario for the duck car.

The steady state error specification was calculated by finding the maximum steady state error using final value theorem (FVT). The theoretical steady-state error of the compensated system remains zero due to it being a type I system. However, achieving a zero steady state error in real life may not be entirely possible due to unmodeled factors such as sensor nonlinearity, and external disturbances, especially friction.

Finally, to avoid saturation issues, it is crucial that the control efforts remain within the limitations of the op amp ( $\pm$12V ).

## 4. Compensator Design using Root Locus and/or Frequency Domain Methods

Based on our specifications, we chose to implement a PD compensator with a stop resistor (a variant of a lead compensator design). The general compensated system block diagram with experimentally determined motor and sensor transfer functions is as follows:

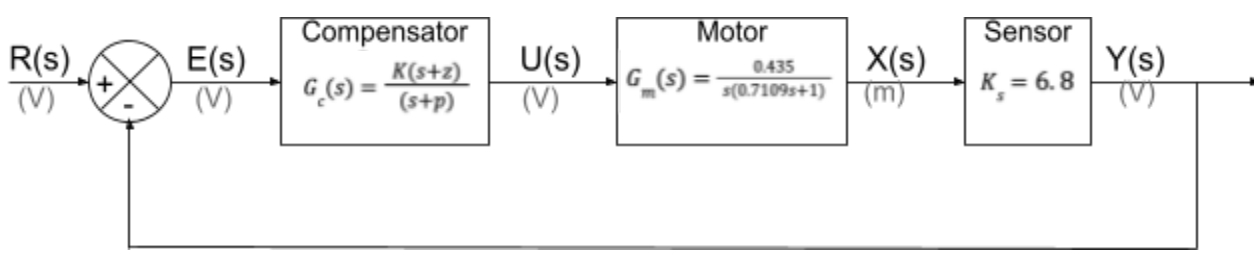

In Sisotool, we modeled our compensator as a lead, and started by placing it with the zero and pole a factor of 10 apart, at s = -1 and -10 respectively. From there, we adjusted the pole and zero locations to bring the zero close to the system pole at approximately s = -1.41 while keeping the pole and zero locations roughly a factor of 10 apart and meeting our other specifications. The primary factors impacting our final pole and zero placement were minimizing peak overshoot and maintaining control effort below saturation levels. Our final compensator design had a pole at s = -14.7 and a zero at s = -1.34. For gains of 0.5 or lower, this allowed us to nearly satisfy the (strict) settling time specification while meeting our control effort specification, while for slightly higher gains (1.5 and above) the settling time spec could be met but control effort appeared to increase above saturation levels for a unit step input. However, since step inputs would practically end up being lower than a unit value given our operating range of distances, we decided to try implementing our system for several different gains and see which worked best based on experimental data.

*Figure 8: Compensator Transfer Function with Pole and Zero Values for Gain = 2*

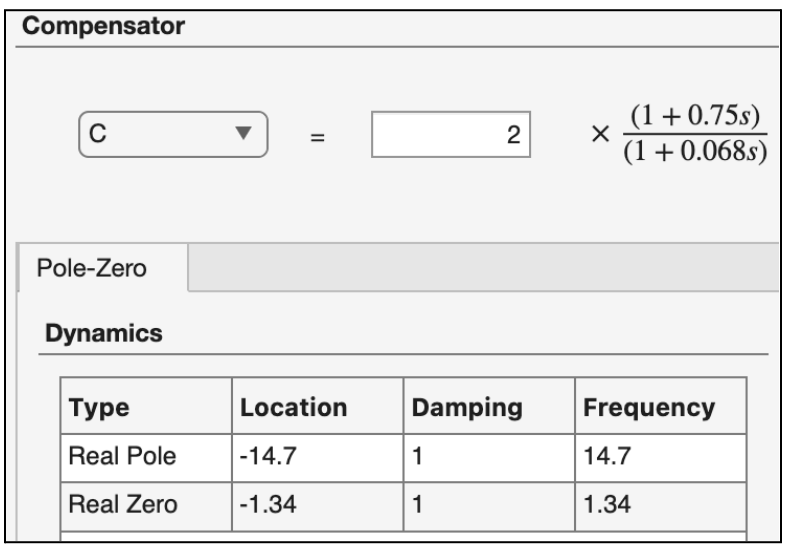


| Type | Location | Damping | Frequency |
|---|---|---|---|
| Real Pole | -14.7 | 1 | 14.7 |
| Real Zero | -1.34 | 1 | 1.34 |

*Figure 9: Root Locus, Bode Plot and Step Response of the Compensated System*

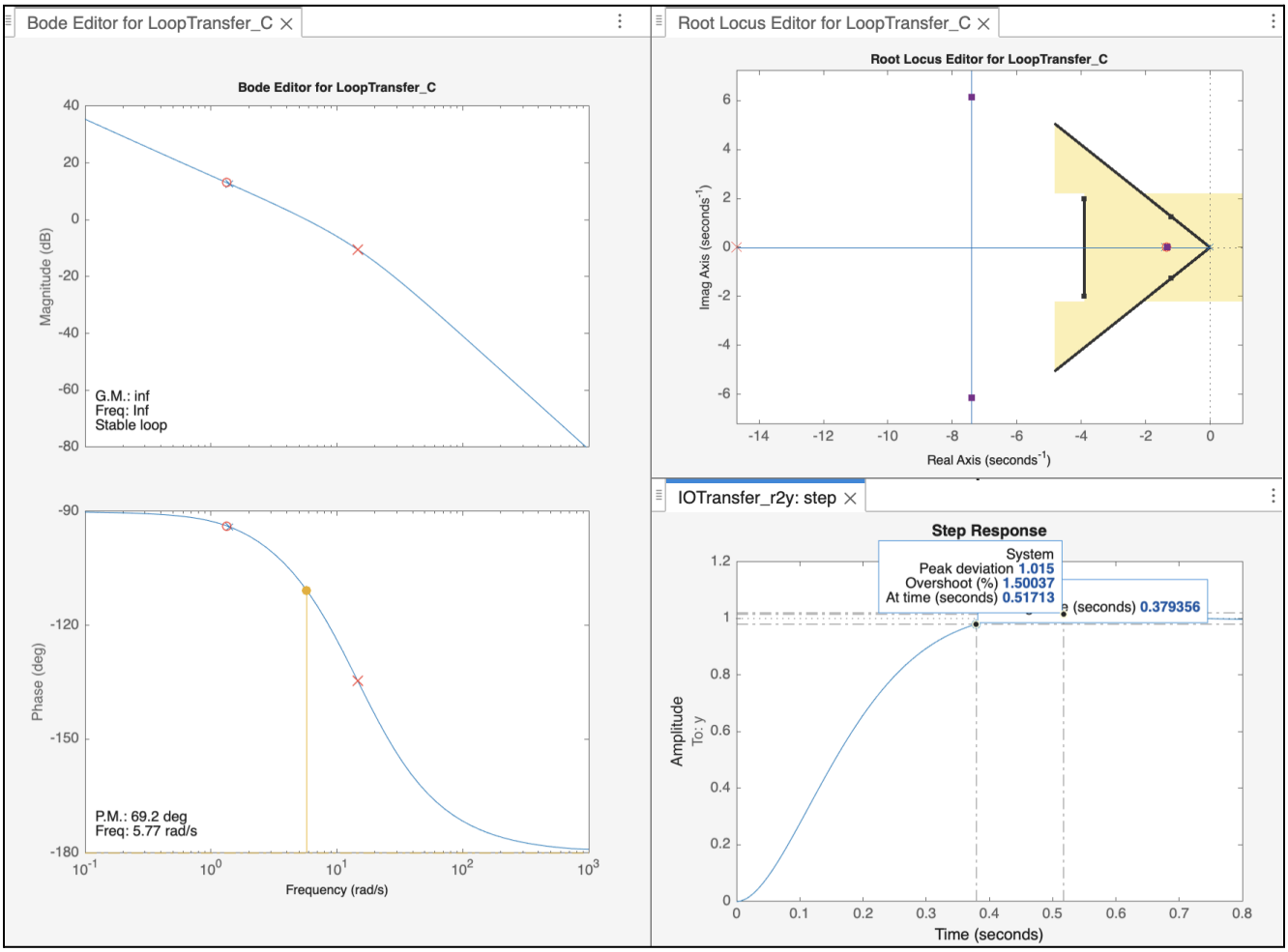


Based on Sisotool modeling, for a gain of 2, our system meets all specifications except for control effort. The model shows zero steady-state error, the gain margin is infinite, the phase margin is 69.2 degrees, the peak overshoot is 1.5%, and the settling time is about 0.4 seconds.

We also simulated the response of the compensated system to a unit step control effort disturbance (Figure 10), and determined that the disturbance did not destabilize the system. We also observed that the disturbance had only a transient effect on the output, meaning that the system would return to its previous undisturbed value.

*Figure 10: Matlab Simulation of Unit Step Disturbance Input to Control Effort*

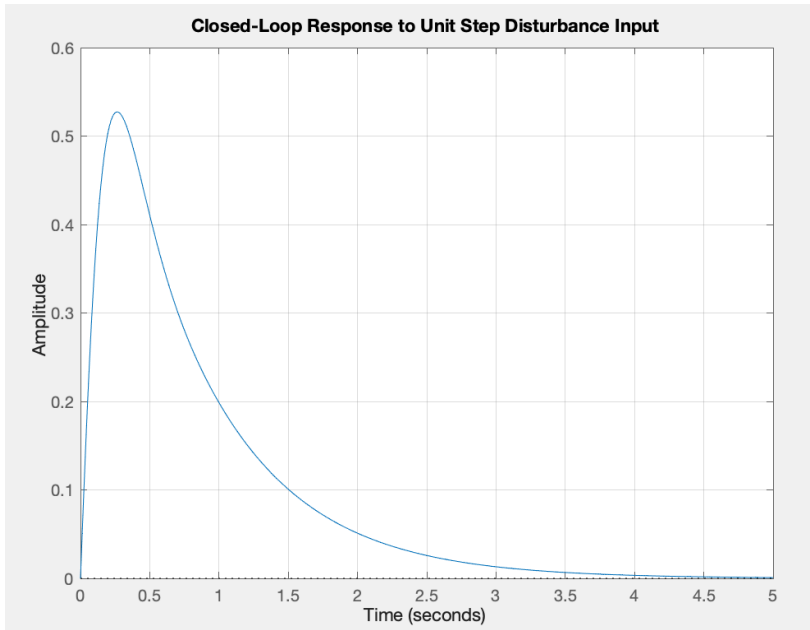


## 5. Compensator Implementation

As detailed in Appendix B of the ENGS 26 Lab 5 document, the general schematic for a PD compensator with a stop resistor is:

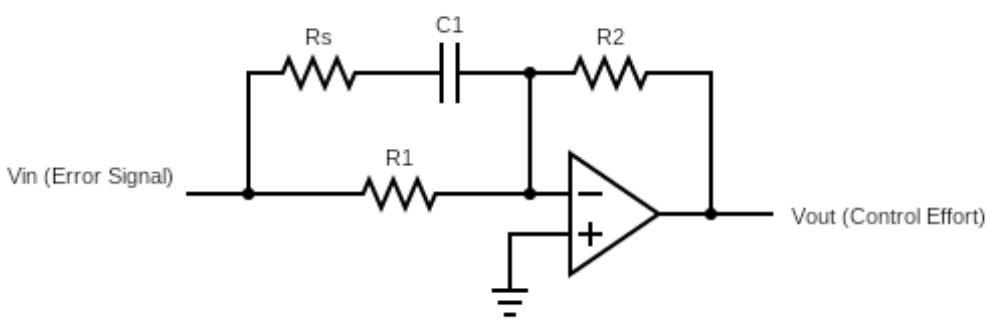


And the transfer function is given by the following:

$$K_p = \frac{R_2}{R_1}, \qquad T_D = \frac{1}{R_1 C_1}, \qquad \alpha = \frac{1}{R_S C_1}$$

$$G_c(s) = -K_p\left[1 + \frac{s}{T_D}\left(\frac{\alpha}{s+\alpha}\right)\right] = -K_p \frac{(T_D+\alpha)s + \alpha T_D}{T_D(s+\alpha)}$$

Rearranging this transfer function to bode form gives us a way to easily calculate the component values corresponding to the compensator we designed in Sisotool.

$$G_c(s) = \frac{K_p(\alpha T_D)}{\alpha T_D}\frac{\frac{T_D+\alpha}{\alpha T_D}s+1}{\frac{1}{\alpha}s+1} = K_p\frac{\frac{T_D+\alpha}{\alpha T_D}s+1}{\frac{1}{\alpha}s+1} = \frac{R_2}{R_1}\frac{(\frac{1}{R_1C_1}+\frac{1}{R_sC_1})R_1R_sC_1^2s+1}{R_sC_1s+1} = \frac{R_2}{R_1}\frac{(R_sC_1+R_1C_1)s+1}{R_sC_1s+1}$$

We first implemented our system with a gain of 1, which resulted in a critically damped step response with zero peak overshoot, but we determined that this design did not provide sufficient control effort for the smaller error signals associated with following a moving target. We increased the gain to 1.5 and finally 2.2, which we settled on as our final design. While this system had slight peak overshoot, it was able to follow a moving target.

Final Implemented Compensator Transfer Function (In Bode Form):

$$G_c(s) = 2.2\frac{0.75s+1}{0.068s+1}$$

Using the re-arranged general transfer function from above, we found the capacitor and resistor values that would provide our desired compensator transfer function, as shown in the schematic below:

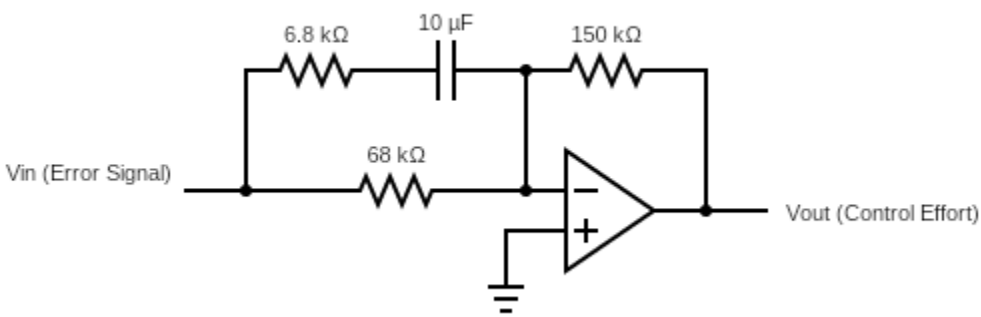


The actual measured values of the components used in our implementation are detailed in the schematic below:

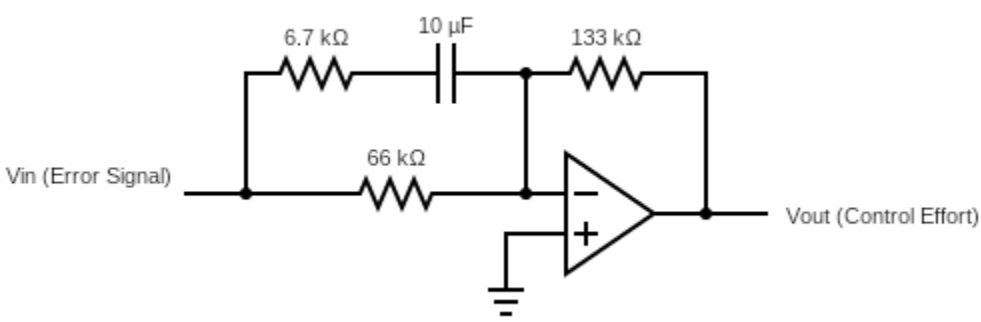

Thus, the analytic transfer function for our implemented circuit accounting for the measured resistances is

$$G_c(s) = 2.0\frac{0.73s + 1}{0.067s + 1}$$

## 6. Experimental Verification

To experimentally verify that our compensated system met our specifications, we filmed a step response and analyzed the results using Tracker. We also recorded step responses on the oscilloscope, to verify that the control effort did not saturate. In both cases, a step response was achieved by placing two barriers in front of the car, and then abruptly removing the closer barrier, at which point the car would move up to the set distance (approximately 6 inches) from the second barrier.

*Figure 11: Tracker Data Results for Compensated System Step Response*

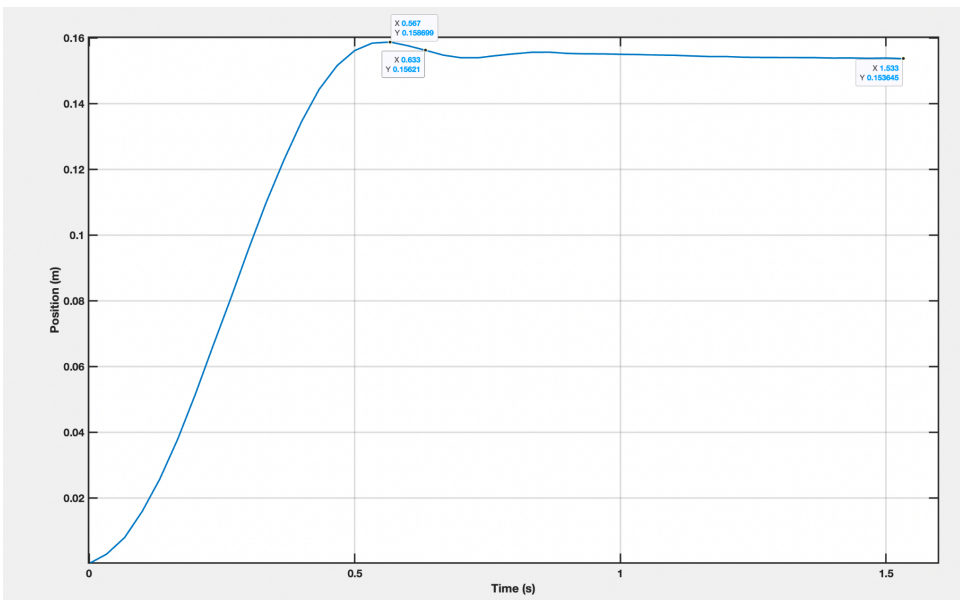


Based on our step response data from Tracker video analysis, our compensated system has a 2% settling time of 0.633 sec, and a peak overshoot of 3.2%. These values were slightly larger than predicted by our MATLAB simulations, but still well within our specifications of 1 sec and 5% respectively.

*Figure 12a: Oscilloscope Data for Repeated Step Responses of the Compensated System*

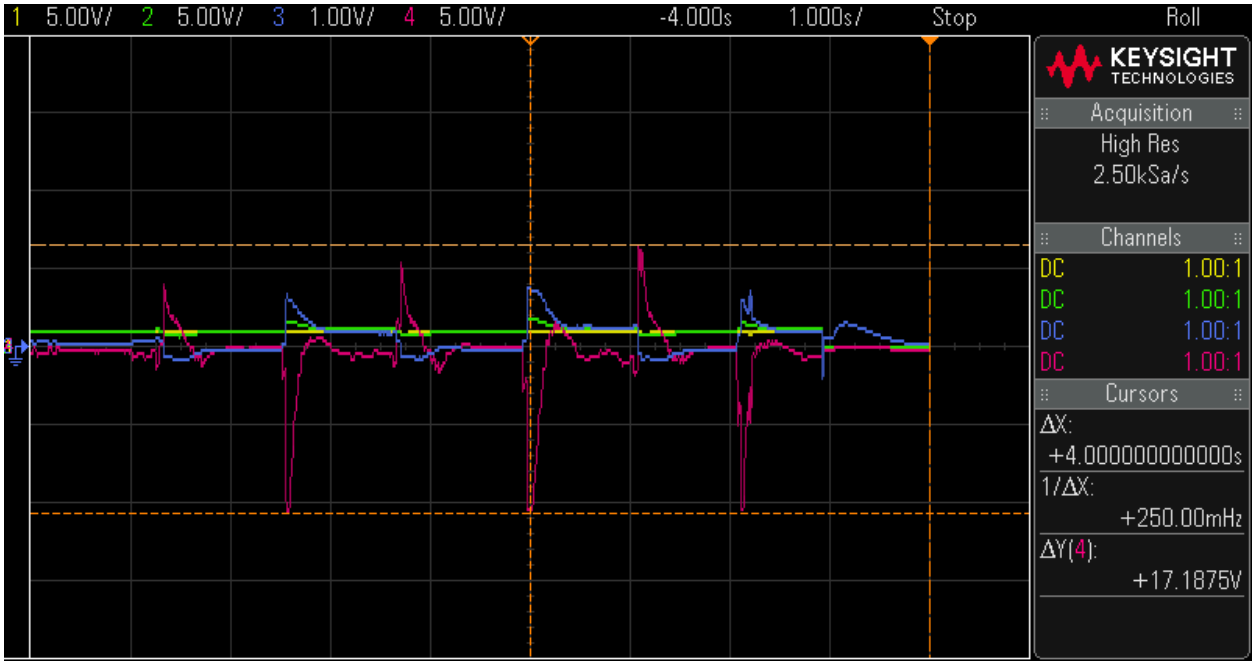


*Figure 12b: Oscilloscope Close Up of Compensated System Step Response*

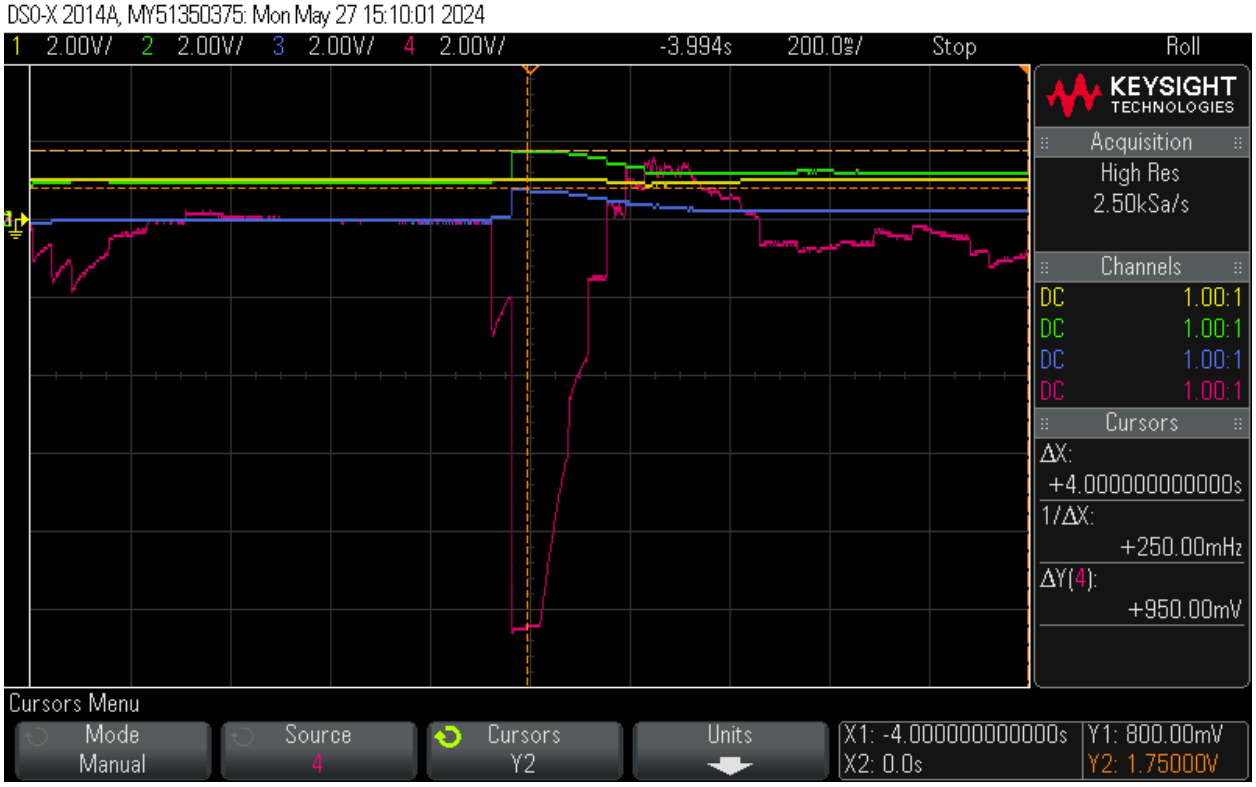


Note: In Figures 12a & 12b, reference input (1.1V) is shown in yellow, sensor output in green, error signal in blue, and control effort in pink. In Figure 12a, note the difference in scale between channels (necessary to show all the behavior of the repeated step responses).

Based on our oscilloscope measurements for the compensated system step response, the maximum control effort is 10.7 V, which may indicate a brief period (approximately 40 ms) of op-amp saturation. However, for smaller amplitudes of step input where both barriers are closer to our operating distance around which we linearized the sensor model, resulting in a lower maximum magnitude of the error signal, the control effort will not saturate. Thus, our system can meet the control effort specification for a smaller range of distances around our operating point (0.14 m), but fails to meet that specification for extremely large or small distances.

## 7. Conclusion and Reflections

In this project, we designed and implemented a compensation system for a duck car to improve its stability and performance in response to obstacles detection by the sensor. We design a PD compensator with stop resistor to achieve desired performance of the duck car. The primary goals were to minimize the peak overshoot to less than 5% and reduce settling time to 1s. These specifications were successfully met (Figure 10). In addition, the compensated system demonstrated an ability to reject disturbances (Figure 9) with a positive gain margin and 69.2 º phase margin. Although the system is a type I system with a zero steady state error, in this project, achieving a zero steady state error was difficult due to unmodeled factors such as disturbances and non-linearities sensor factors. The control efforts were monitored to avoid saturation of the op amp (maximum of 12V). A few periods of saturation were observed, but our experimental setup showed a maximum of 10.7V (Figure 11 & 12).

One area for further improvement is addressing the control effort saturation. With our chosen compensator type, it was difficult to meet all specifications simultaneously, particularly in regard to balancing the need for a higher gain to ensure a sufficient response for small changes in error signal, while avoiding op-amp saturation for larger error signal contexts. Relaxing one or both of our fairly stringent settling time and peak overshoot specifications could allow us to avoid control effort saturation for a wider range of distances around the operating point.

## 8. Appendices

Note: Due to the size of data sets, our Motor Characterization and Compensated System Step Response Tracker Data are attached to the assignment separately as .txt files.

A. Sensor Characterization Data

| Distance to Barrier (m) | Sensor Voltage (V) |
|---|---|
| 0 | 2.905 |
| 0.0127 | 2.681 |
| 0.0254 | 2.443 |
| 0.0381 | 2.196 |
| 0.0508 | 1.966 |
| 0.0635 | 1.789 |
| 0.0762 | 1.644 |
| 0.0889 | 1.512 |
| 0.1016 | 1.37 |
| 0.1143 | 1.33 |
| 0.127 | 1.205 |
| 0.1397 | 1.109 |
| 0.1524 | 0.965 |
| 0.1778 | 0.844 |
| 0.2032 | 0.732 |
| 0.2286 | 0.655 |
| 0.254 | 0.577 |
| 0.2794 | 0.538 |
| 0.3048 | 0.48 |
| 0.3302 | 0.461 |
| 0.3556 | 0.418 |
| 0.381 | 0.398 |
| 0.4064 | 0.379 |
| 0.4318 | 0.359 |
| 0.4572 | 0.352 |
| 0.4826 | 0.34 |
| 0.508 | 0.323 |
| 0.5334 | 0.319 |
| 0.5588 | 0.3 |
| 0.5842 | 0.3 |
| 0.6096 | 0.3 |
| 0.635 | 0.281 |

| | |
|---|---|
| 0.6604 | 0.281 |
| 0.6858 | 0.281 |
| 0.7112 | 0.28 |
| 0.7366 | 0.26 |
| 0.762 | 0.26 |

B. Motor Characterization Data Analysis Code (MATLAB)

```
% ENGS 26 Final Project Motor Characterization
% Hannah Chipman & Charité Igirimbabazi

% Note: Data must be imported as xn, vxn, txn where n is the input voltage of
the given data set (3, 4, or 5)

% 3V Data Analysis
% Start and Stop Indices
i0 = 86; % time car starts moving
ie = 214; % time car is caught
ixe = 135; % estimated end of purely first-order (exponential) behavior

% Trim data to only between start of motion and being caught
t3trim = t3(i0:ie)-t3(i0);
vx3trim = -0.0254*vx3(i0:ie);

% Trim data to estimated purely first-order portion of test (for modeling)
t3exp = t3(i0:ixe)-t3(i0);
vx3exp = -0.0254*vx3(i0:ixe);

% Plot test data
figure
plot(t3trim,vx3trim,LineWidth=1.5)
hold on

% Model purely first-order portion of data to extrapolate final
% steady-state & time constant values
modelfun = @(c,x)c(1)*3*(1-exp(-1*x/c(2)));
beta0 = [1,1];
mdl3 = fitnlm(t3exp,vx3exp,modelfun,beta0)
% Plot exponential model on top of data, for time vector showing steady
% state behavior
vx3mod = feval(mdl3,[0:0.05:6]);
plot([0:0.05:6],vx3mod,LineWidth=1.5)
xlabel("Time (s)")
ylabel("Velocity (m/s)")
legend("3V Experimental Data","3V Exponential Model",Location="southeast")
```

```
grid on
set(gca,"FontSize",14,"FontWeight","bold",linewidth=1.5)
hold off

% 4V Data Analysis
i0 = 22; % time car starts moving
ie = 111; % time car is caught
ixe = 67; % estimated end of purely first-order (exponential) behavior

% Trim data to only between start of motion and being caught
t4trim = t4(i0:ie)-t4(i0);
vx4trim = -0.0254*vx4(i0:ie);

% Trim data to estimated purely first-order portion of test (for modeling)
t4exp = t4(i0:ixe)-t4(i0);
vx4exp = -0.0254*vx4(i0:ixe);

% Plot test data
figure
plot(t4trim,vx4trim,LineWidth=1.5)
hold on

% Model purely first-order portion of data to extrapolate final
% steady-state & time constant values
modelfun = @(c,x)c(1)*4*(1-exp(-1*x/c(2)));
beta0 = [1,1];
mdl4 = fitnlm(t4exp,vx4exp,modelfun,beta0)

% Plot exponential model on top of data, for time vector showing steady
% state behavior
vx4mod = feval(mdl4,[0:0.05:6]);
plot([0:0.05:6],vx4mod,LineWidth=1.5)
xlabel("Time (s)")
ylabel("Velocity (m/s)")
legend("4V Experimental Data","4V Exponential Model",Location="southeast")
grid on
set(gca,"FontSize",14,"FontWeight","bold",linewidth=1.5)
hold off

% 5V Data Analysis
i0 = 2; % time car starts moving
ie = 62; % time car is caught
ixe = 62; % estimated end of purely first-order (exponential) behavior

% Trim data to only between start of motion and being caught
t5trim = t5(i0:ie)-t5(i0);
vx5trim = -0.0254*vx5(i0:ie);

% Trim data to estimated purely first-order portion of test (for modeling)
```

```
t5exp = t5(i0:ixe)-t5(i0);
vx5exp = -0.0254*vx5(i0:ixe);

% Plot test data
figure
plot(t5trim,vx5trim,LineWidth=1.5)
hold on

% Model purely first-order portion of data to extrapolate final
% steady-state & time constant values
modelfun = @(c,x)c(1)*5*(1-exp(-1*(x-c(3))/c(2)));
beta0 = [1,1,1];
mdl5 = fitnlm(t5exp,vx5exp,modelfun,beta0)

% Plot exponential model on top of data, for time vector showing steady
% state behavior
vx5mod = feval(mdl5,[0:0.05:5]);
plot([0:0.05:5],vx5mod,LineWidth=1.5)
xlabel("Time (s)")
ylabel("Velocity (m/s)")
legend("5V Experimental Data","5V Exponential Model",Location="southeast")
grid on
set(gca,"FontSize",14,"FontWeight","bold",linewidth=1.5)
hold off
```

## C. Compensated System Step Response Tracker Data Analysis Code (MATLAB)

```
% ENGS 26 Compensated System Tracker Analysis
% Hannah Chipman & Charité Igirimbabazi
% Note: Data must be imported as column vectors tc, xc
% start and end indices
i0 = 64;
ie = 110;
% trim data to actual step response portion
tctrim = tc(i0:ie)-tc(i0);
xctrim = 0.0254*(xc(i0:ie)-xc(i0));
% Plot data
plot(tctrim,xctrim,linewidth=2)
xlabel("Time (s)")
ylabel("Position (m)")
grid on
set(gca,"FontSize",14,"FontWeight","bold",linewidth=2)
hold off
```