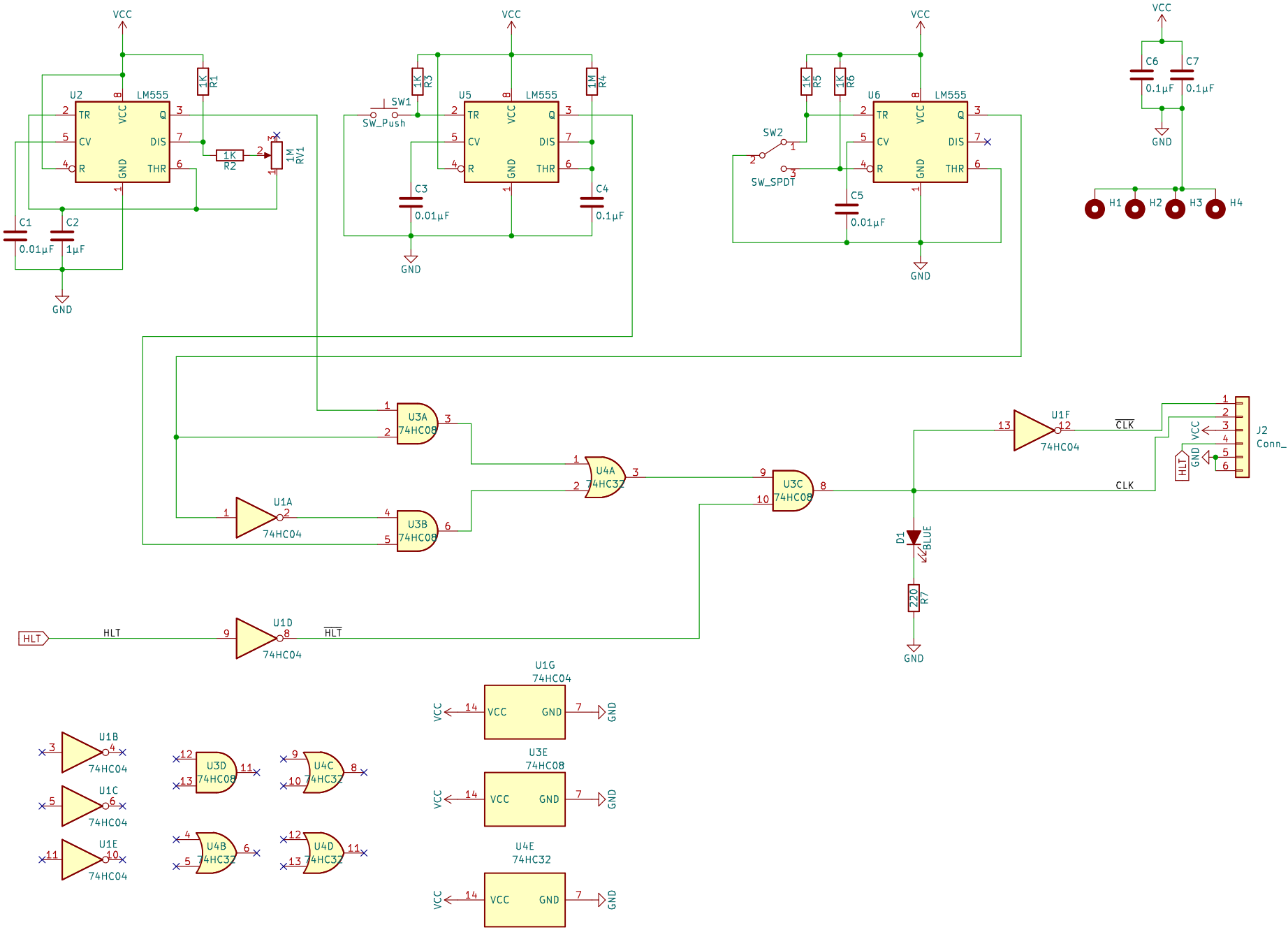
VCC
U2
LM555
TR
CV
R
VCC
GND
Q
DIS
THR
1K
R1
1K
R2
1M
RV1
C1
0.01µF
C2
1µF
GND
U5
LM555
SW1
SW_Push
1K
R3
1M
R4
C3
0.01µF
C4
0.1µF
GND
U6
LM555
SW2
SW_SPDT
1K
R5
1K
R6
C5
0.01µF
GND
C6
0.1µF
C7
0.1µF
GND
H1
H2
H3
H4
U3A
74HC08
U3B
74HC08
U4A
74HC32
U3C
74HC08
U1A
74HC04
U1D
74HC04
HLT
HLT
U1F
74HC04
CLK
CLK
J2
Conn_
VCC
GND
HLT
D1
BLUE
220
R7
GND
U1B
74HC04
U1C
74HC04
U1E
74HC04
U3D
74HC08
U4C
74HC32
U4B
74HC32
U4D
74HC32
U1G
74HC04
U3E
74HC08
U4E
74HC32