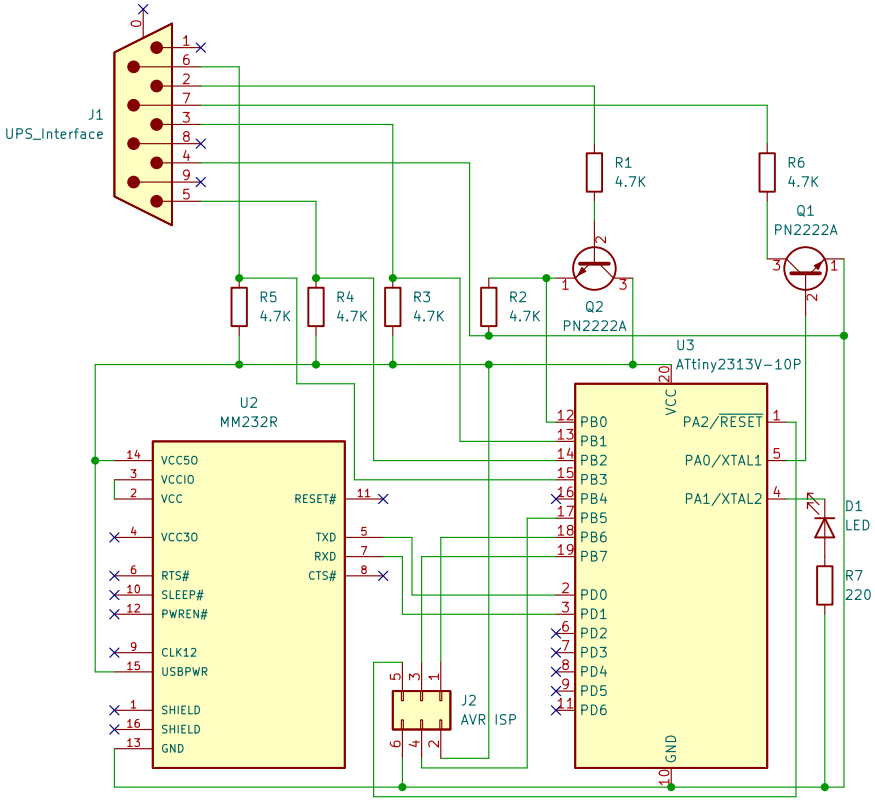

Sheet: /
File: attiny2313-dumbups.kicad_sch

Title: DumbUPS USB interface

Size: A5	Date: 2022-01-02	**Rev: 1**
KiCad E.D.A. kicad (6.0.0-0)		Id: 1/1