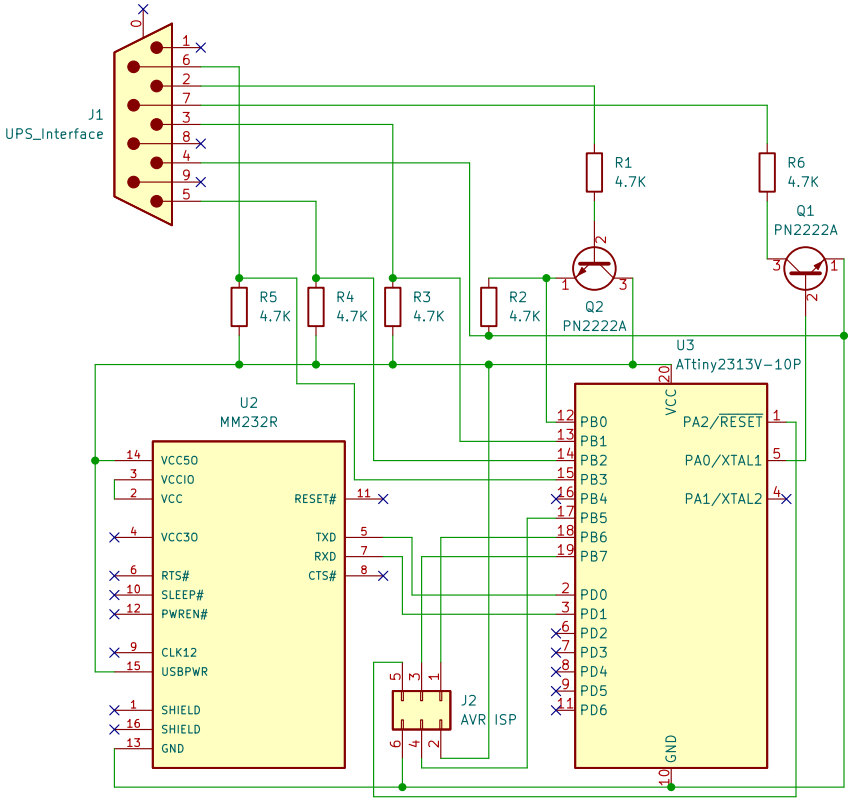


Sheet: /
File: attiny2313-dumbups.kicad_sch

**Title: DumbUPS USB interface**

| | | |
|---|---|---|
| Size: A5 | Date: 2022-01-02 | **Rev: 1** |
| KiCad E.D.A. kicad (6.0.0-0) | | Id: 1/1 |