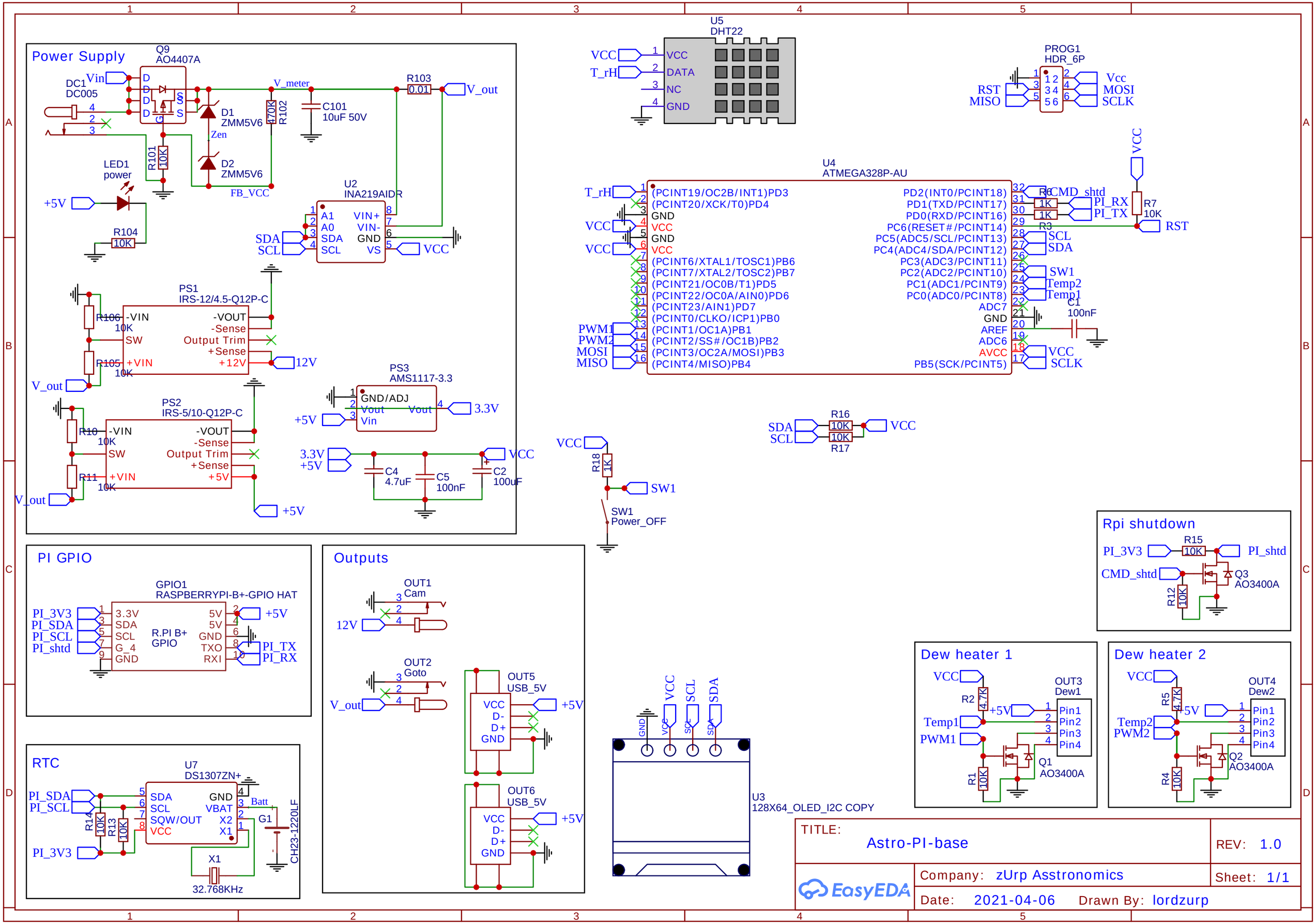
Power Supply
Q9
AO4407A
DC1
DC005
Vin
V_meter
R103
0.01
V_out
D1
ZMM5V6
Zen
D2
ZMM5V6
470K
R102
C101
10uF 50V
R101
10K
LED1
power
+5V
R104
10K
FB_VCC
U2
INA219AIDR
A1
A0
SDA
SCL
VIN+
VIN-
GND
VS
VCC
PS1
IRS-12/4.5-Q12P-C
R106
10K
-VIN
SW
R105
10K
+VIN
-VOUT
-Sense
Output Trim
+Sense
+12V
12V
PS2
IRS-5/10-Q12P-C
R10
10K
R11
10K
+5V
PS3
AMS1117-3.3
GND/ADJ
Vout
Vin
3.3V
C4
4.7uF
C5
100nF
C2
100uF
U5
DHT22
DATA
NC
GND
T_rH
PROG1
HDR_6P
RST
MISO
Vcc
MOSI
SCLK
U4
ATMEGA328P-AU
(PCINT19/OC2B/INT1)PD3
(PCINT20/XCK/T0)PD4
(PCINT6/XTAL1/TOSC1)PB6
(PCINT7/XTAL2/TOSC2)PB7
(PCINT21/OC0B/T1)PD5
(PCINT22/OC0A/AIN0)PD6
(PCINT23/AIN1)PD7
(PCINT0/CLKO/ICP1)PB0
(PCINT1/OC1A)PB1
(PCINT2/SS#/OC1B)PB2
(PCINT3/OC2A/MOSI)PB3
(PCINT4/MISO)PB4
PD2(INT0/PCINT18)
PD1(TXD/PCINT17)
PD0(RXD/PCINT16)
PC6(RESET#/PCINT14)
PC5(ADC5/SCL/PCINT13)
PC4(ADC4/SDA/PCINT12)
PC3(ADC3/PCINT11)
PC2(ADC2/PCINT10)
PC1(ADC1/PCINT9)
PC0(ADC0/PCINT8)
ADC7
AREF
ADC6
AVCC
PB5(SCK/PCINT5)
R6
1K
R3
1K
CMD_shtd
PI_RX
PI_TX
R7
10K
RST
SCL
SDA
SW1
Temp2
Temp1
C1
100nF
VCC
SCLK
PWM1
PWM2
MOSI
MISO
R16
10K
R17
10K
R18
1K
SW1
Power_OFF
Rpi shutdown
PI_3V3
R15
10K
PI_shtd
CMD_shtd
Q3
AO3400A
R12
10K
PI GPIO
GPIO1
RASPBERRYPI-B+-GPIO HAT
PI_3V3
PI_SDA
PI_SCL
PI_shtd
3.3V
SDA
SCL
G_4
GND
R.PI B+
GPIO
5V
5V
GND
TXO
RXI
+5V
PI_TX
PI_RX
Outputs
OUT1
Cam
12V
OUT2
Goto
V_out
OUT5
USB_5V
VCC
D-
D+
GND
+5V
OUT6
USB_5V
Dew heater 1
VCC
R2
4.7K
+5V
Temp1
PWM1
OUT3
Dew1
Pin1
Pin2
Pin3
Pin4
Q1
AO3400A
R1
10K
Dew heater 2
VCC
R5
4.7K
+5V
Temp2
PWM2
OUT4
Dew2
Pin1
Pin2
Pin3
Pin4
Q2
AO3400A
R4
10K
RTC
U7
DS1307ZN+
PI_SDA
PI_SCL
PI_3V3
R14
10K
R13
10K
SDA
SCL
SQW/OUT
VCC
GND
VBAT
X2
X1
Batt
G1
CH23-1220LF
X1
32.768KHz
U3
128X64_OLED_I2C COPY
GND
VCC
SCL
SDA
TITLE:
Astro-PI-base
REV: 1.0
Company: zUrp Asstronomics
Sheet: 1/1
Date: 2021-04-06
Drawn By: lordzurp
EasyEDA