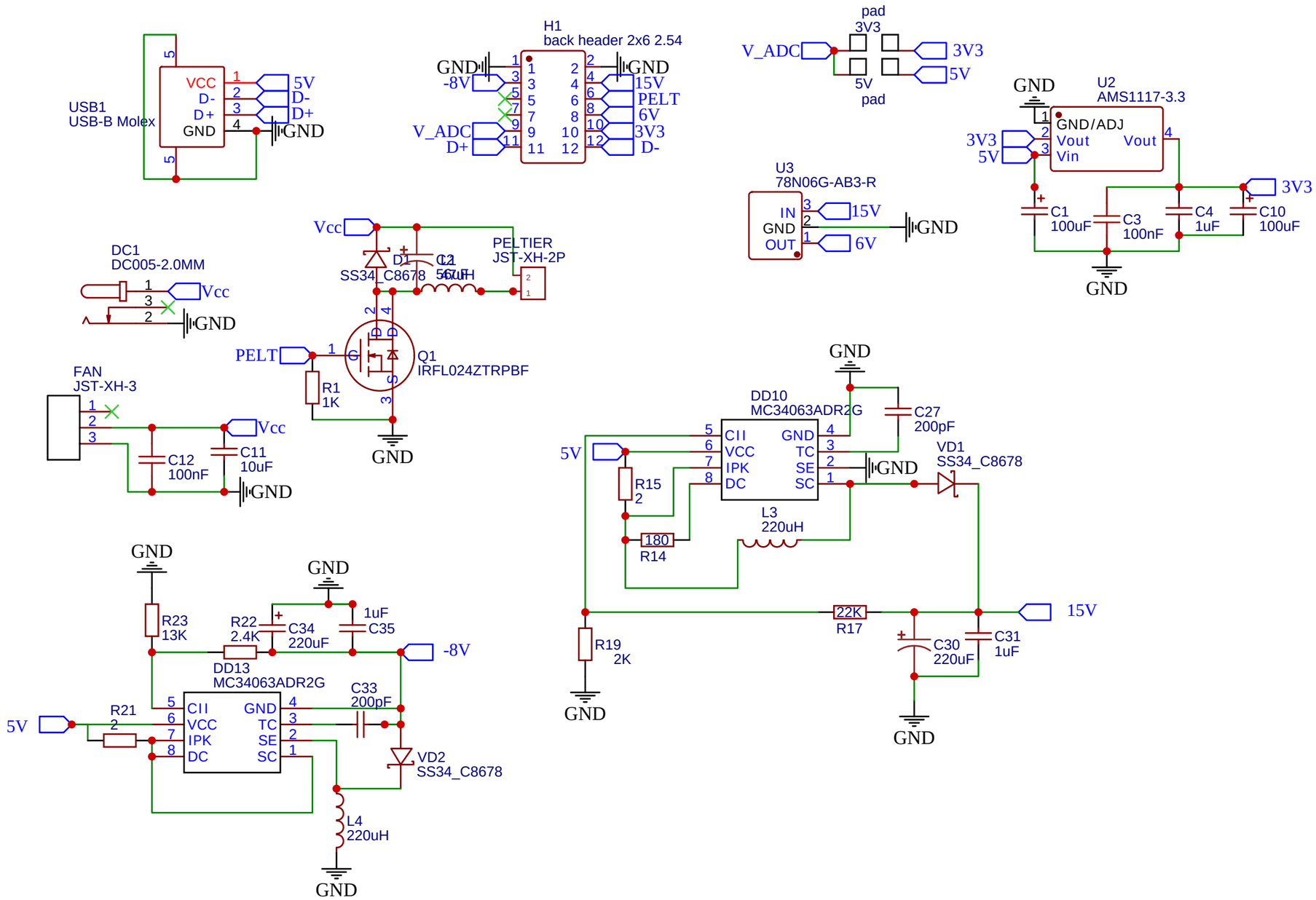

TITLE: Cam87 - Power board		REV: 1.0
EasyEDA	Company: zUrp Astronomics	Sheet: 1/1
	Date: 2020-11-07 Drawn By: lordzurp	