Teensy

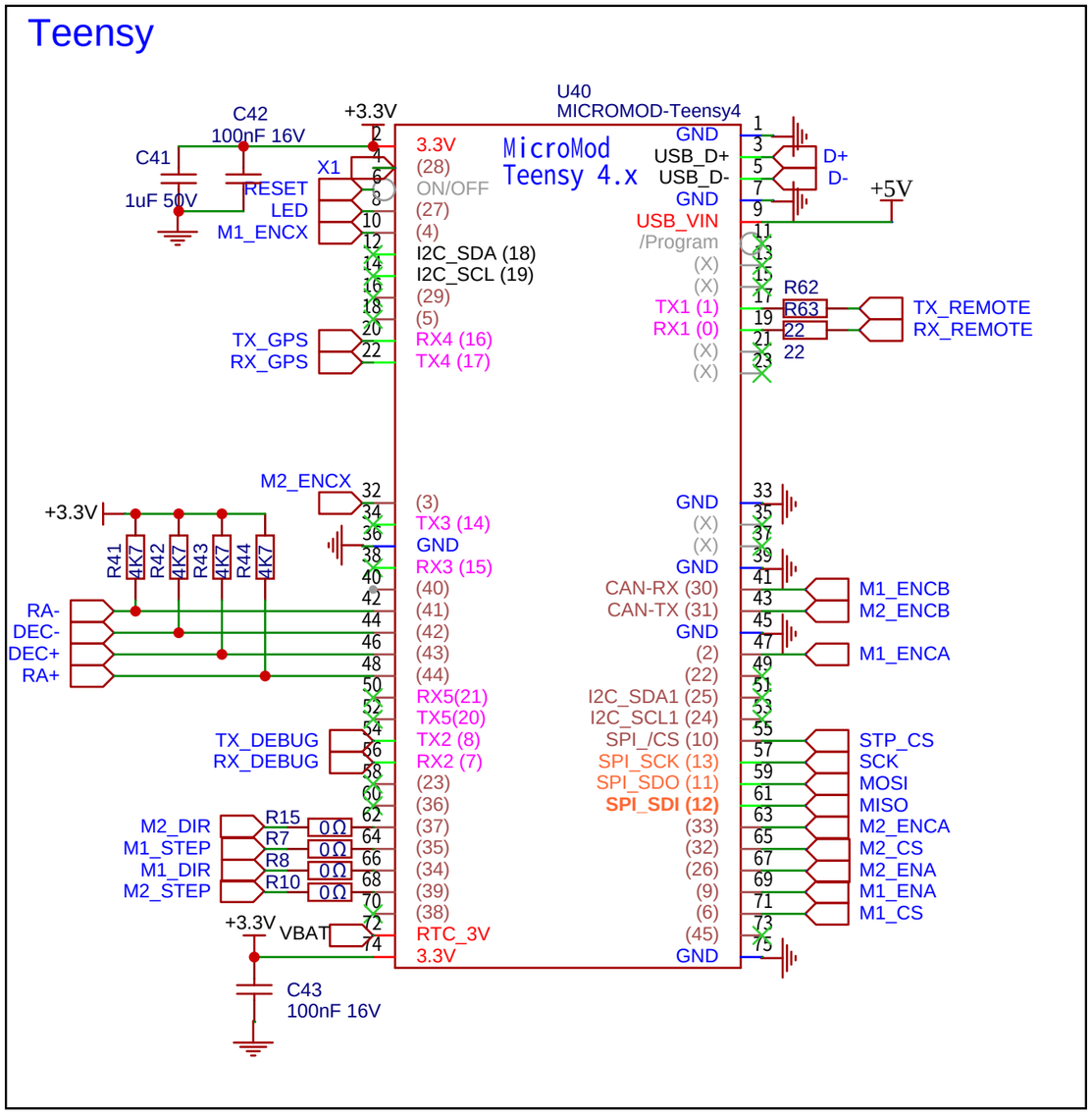

GPS

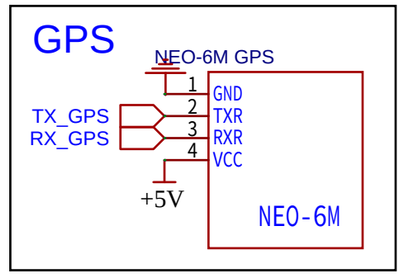

SHC remote

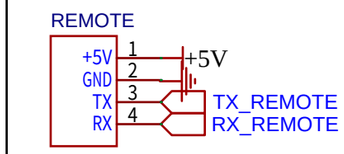

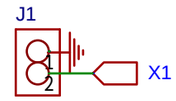

USB

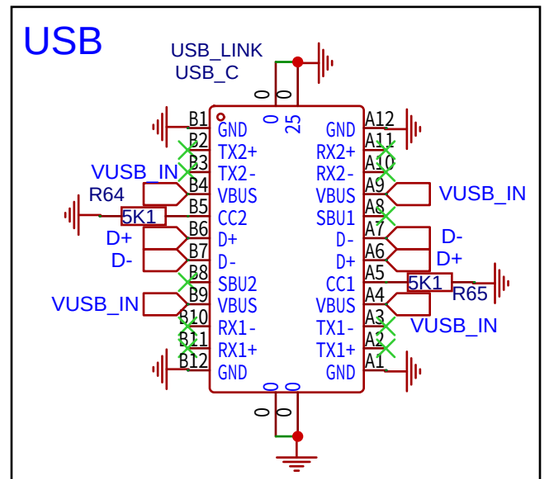

Encoders level conversion

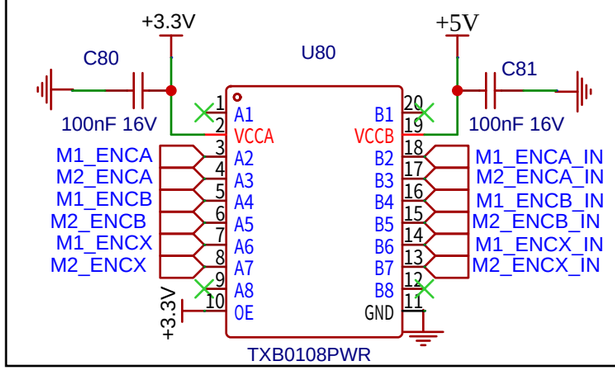

Schematic	Redux_v3_430	Update Date	2022-12-18
		Create Date	2022-07-11
Page	Teensy	Part Number	
Drawed	lordzurp	TeenAstro v3	
Reviewed	lordzurp		
		VER / SIZE / PAGE	V0.9 / A4 / 1 OF 3
EasyEDA		zUrp Industries	

Power reverse protection (25V max)

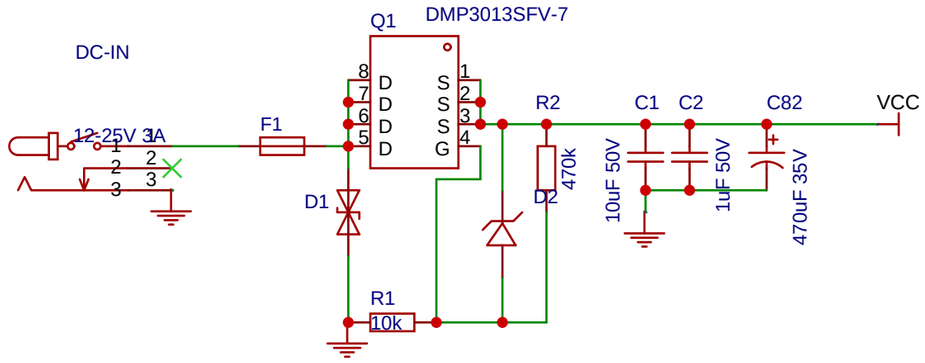

ESD protection

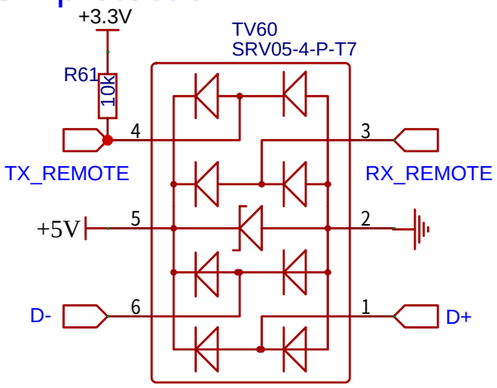

40V -> 5V Step Down

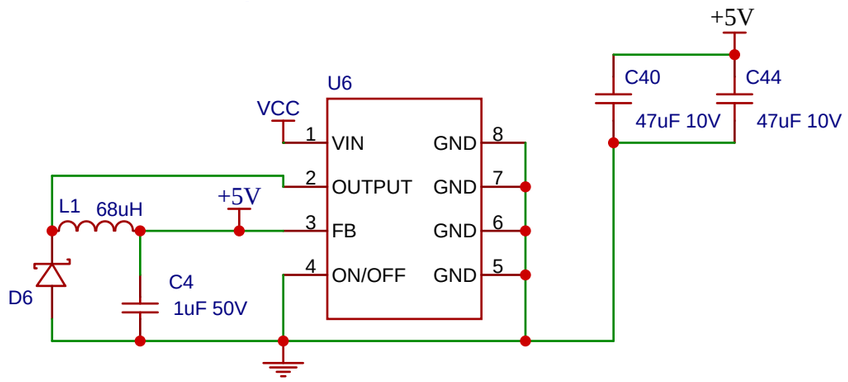

Test Points

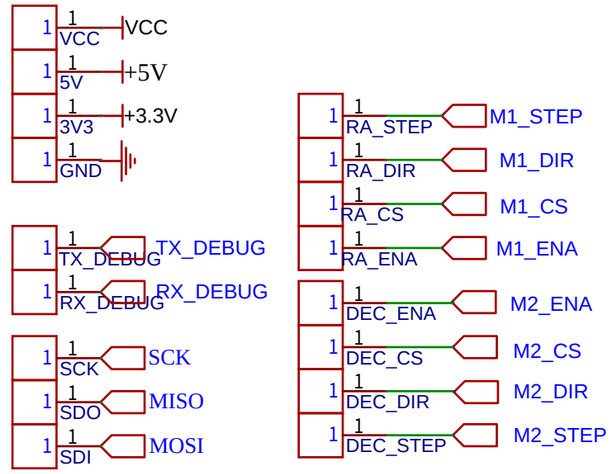

3V3 LDO

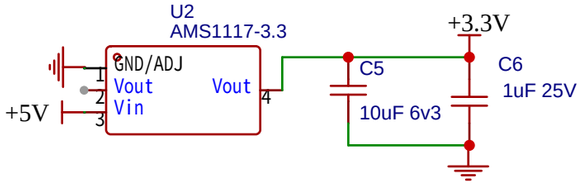

Battery

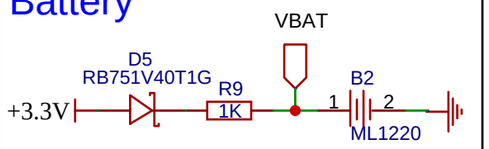

LEDs

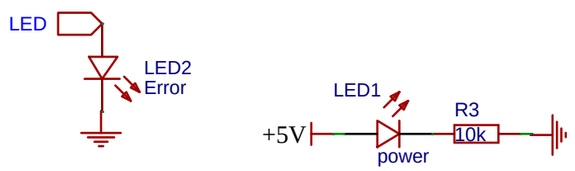

Schematic	Redux_v3_430	Update Date	2022-12-18
		Create Date	2022-06-27
Page	Power	Part Number	
Drawed	lordzurp	TeenAstro v3	
Reviewed	lordzurp		
		VER / SIZE / PAGE 2 OF 3	
EasyEDA		V0.9 / A4	zUrp Industries

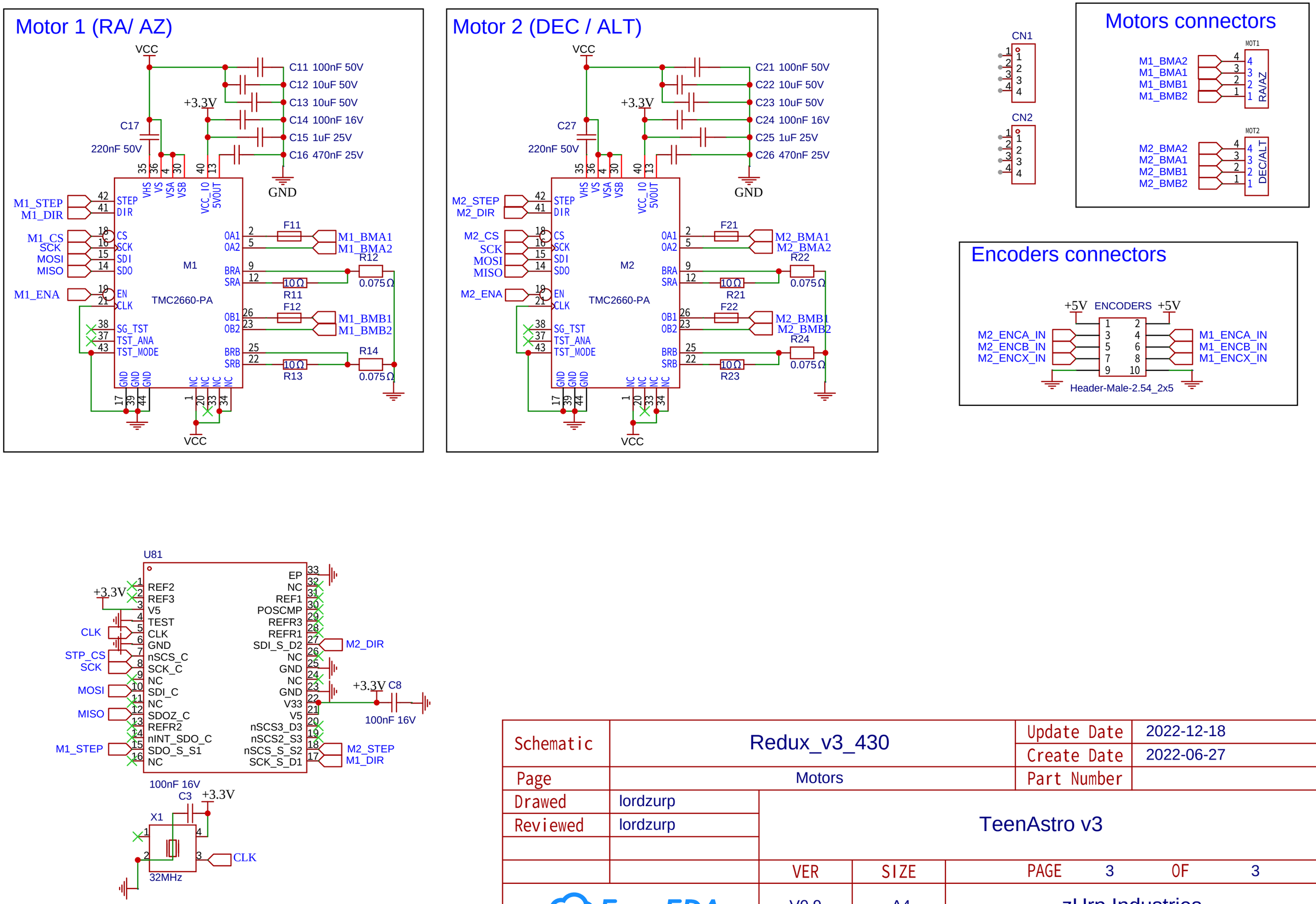

Schematic	Redux_v3_430	Update Date	2022-12-18
		Create Date	2022-06-27
Page	Motors	Part Number	
Drawed	lordzurp	TeenAstro v3	
Reviewed	lordzurp		
		VER	SIZE	PAGE 3 OF 3
EasyEDA		V0.9	A4	zUrp Industries