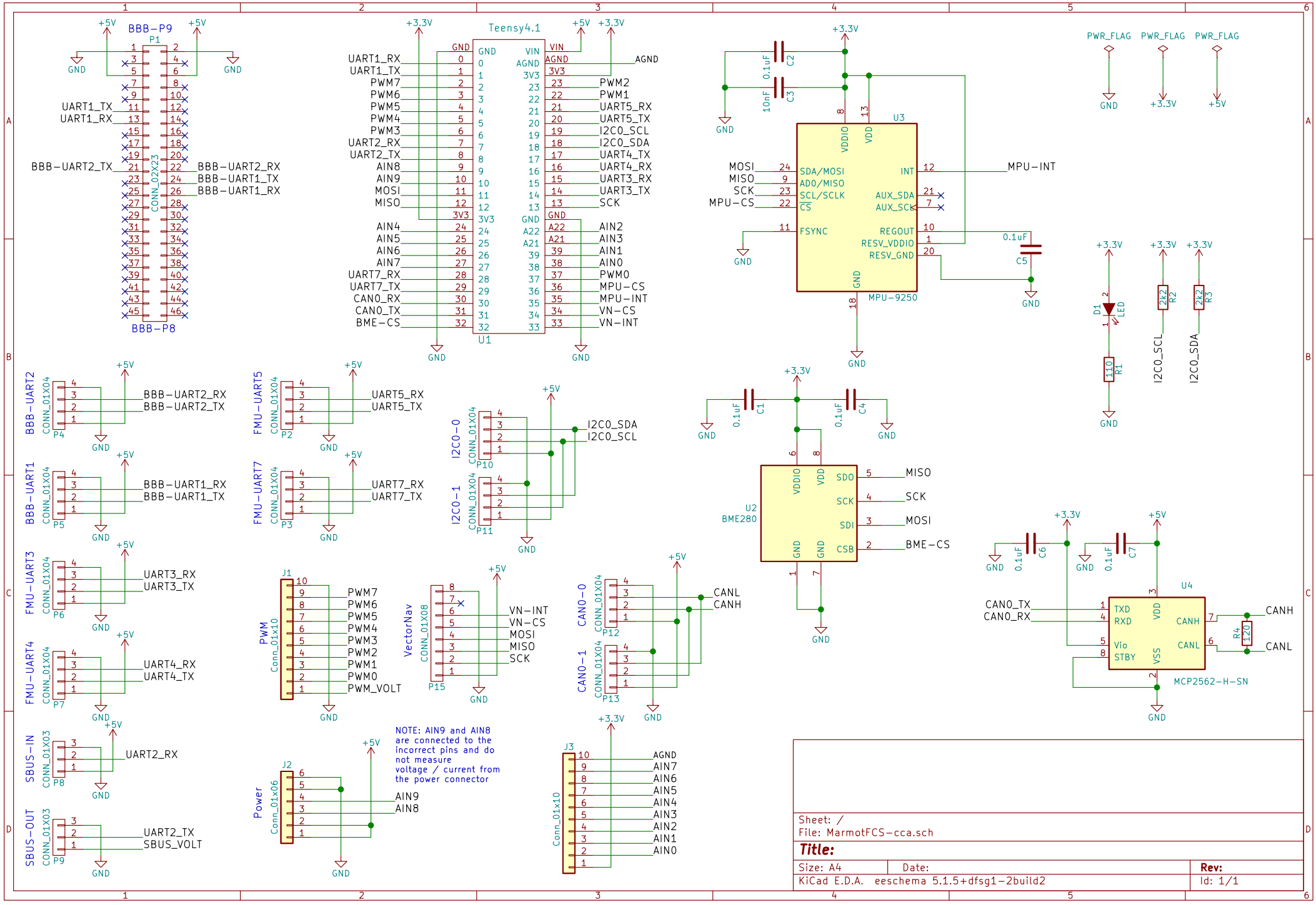
BBB-P9
P1
BBB-P8
CONN_02X23
UART1_TX
UART1_RX
BBB-UART2_TX
BBB-UART2_RX
BBB-UART1_TX
BBB-UART1_RX
Teensy4.1
U1
UART1_RX
UART1_TX
PWM7
PWM6
PWM5
PWM4
PWM3
UART2_RX
UART2_TX
AIN8
AIN9
MOSI
MISO
AIN4
AIN5
AIN6
AIN7
UART7_RX
UART7_TX
CAN0_RX
CAN0_TX
BME-CS
PWM2
PWM1
UART5_RX
UART5_TX
I2C0_SCL
I2C0_SDA
UART4_TX
UART4_RX
UART3_RX
UART3_TX
SCK
AIN2
AIN3
AIN1
AIN0
PWM0
MPU-CS
MPU-INT
VN-CS
VN-INT
AGND
MPU-9250
U3
SDA/MOSI
AD0/MISO
SCL/SCLK
CS
FSYNC
INT
AUX_SDA
AUX_SCL
REGOUT
RESV_VDDIO
RESV_GND
VDDIO
VDD
C1
C2
C3
C4
C5
0.1uF
10nF
PWR_FLAG
D1
LED
R1
110
R2
2k2
R3
BBB-UART2
BBB-UART1
FMU-UART3
FMU-UART4
SBUS-IN
SBUS-OUT
FMU-UART5
FMU-UART7
I2C0-0
I2C0-1
P4
P5
P6
P7
P8
P9
P2
P3
P10
P11
PWM
J1
Conn_01x10
PWM_VOLT
VectorNav
CONN_01X08
P15
CAN0-0
CAN0-1
P12
P13
CANL
CANH
Power
J2
Conn_01x06
AIN9
AIN8
NOTE: AIN9 and AIN8 are connected to the incorrect pins and do not measure voltage / current from the power connector
J3
U2
BME280
SDO
SCK
SDI
CSB
MISO
MOSI
BME-CS
U4
MCP2562-H-SN
TXD
RXD
Vio
STBY
VDD
VSS
R4
120
Sheet: /
File: MarmotFCS-cca.sch
Title:
Size: A4
Date:
Rev:
KiCad E.D.A. eeschema 5.1.5+dfsg1-2build2
Id: 1/1