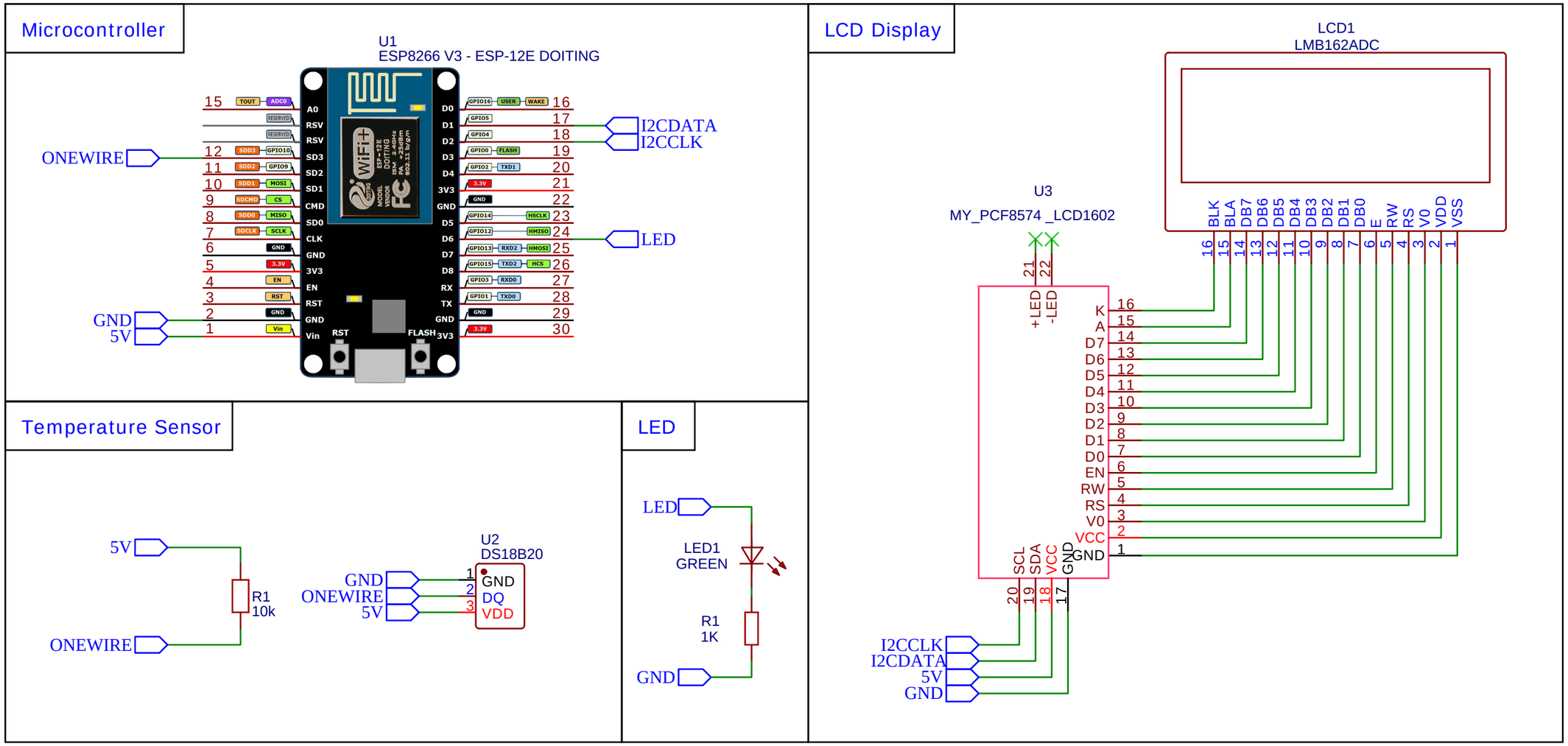

TITLE: ESP API Server		REV: 1.0
嘉立创EDA	Company: Maning Co.	Sheet: 1/1
	Date: 2022-11-24 Drawn By: lorenzmiranda05iot	