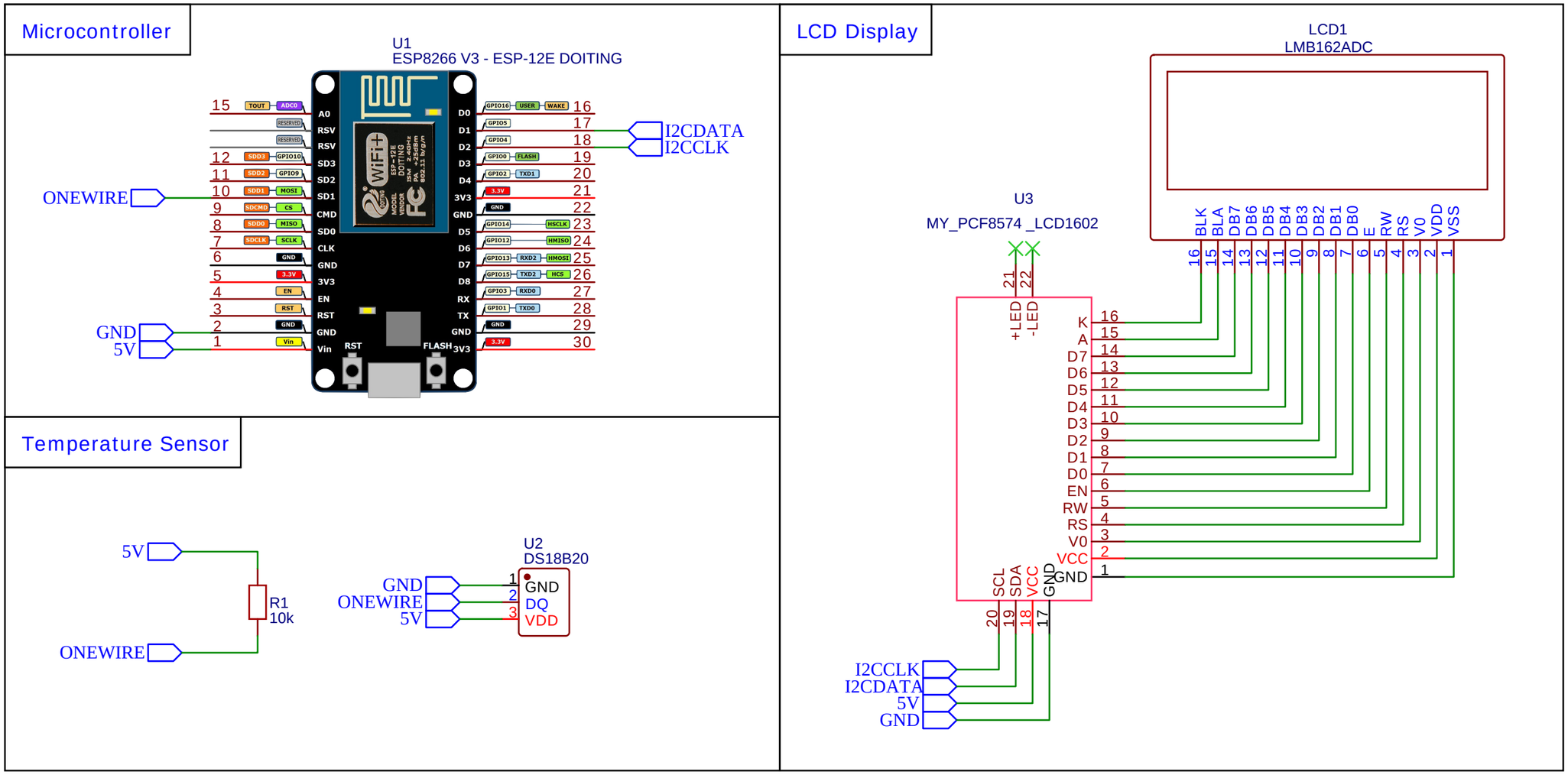

TITLE: ESP Temperature Sensor LCD Display	REV: 1.0
Company: Maning Co.	Sheet: 1/1
Date: 2022-11-10 Drawn By: lorenzmiranda05iot	