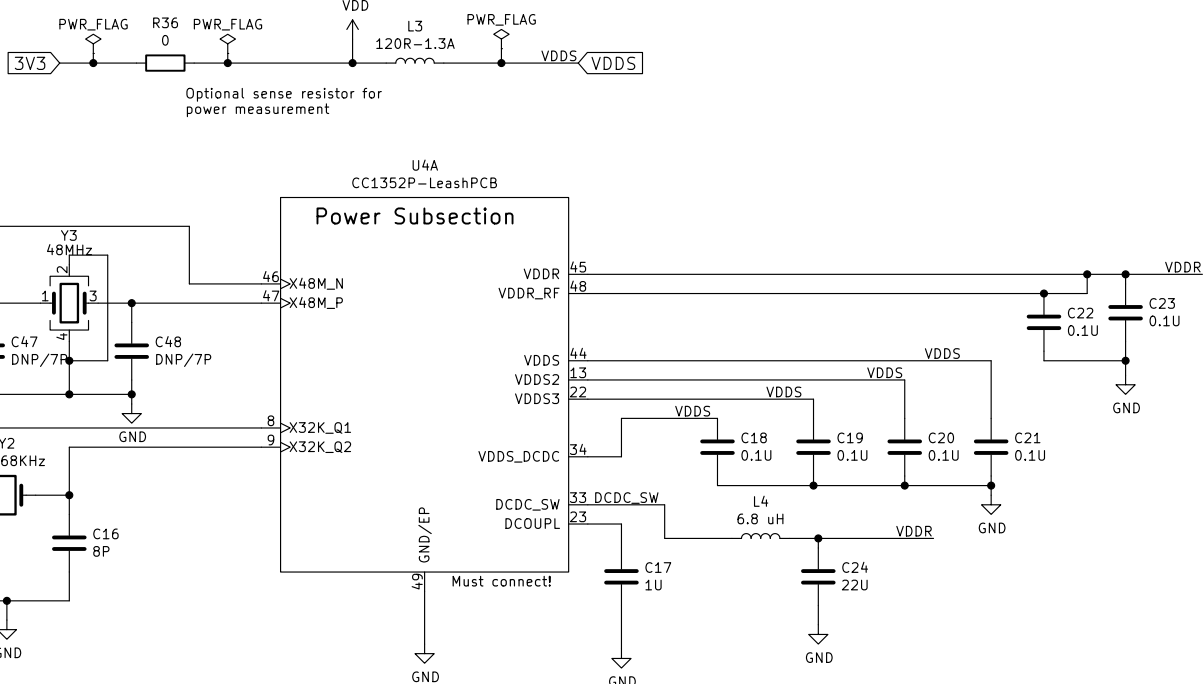
PWR_FLAG
R36
0
PWR_FLAG
VDD
L3
120R-1.3A
PWR_FLAG
3V3
VDDS
VDDS
Optional sense resistor for
power measurement
U4A
CC1352P-LeashPCB
Power Subsection
Y3
48MHz
46 X48M_N
47 X48M_P
C47
DNP/7P
C48
DNP/7P
GND
8 X32K_Q1
9 X32K_Q2
Y2
32.768KHz
C15
8P
C16
8P
GND
GND/EP
49
Must connect!
GND
VDDR 45
VDDR_RF 48
VDDR
C22
0.1U
C23
0.1U
GND
VDDS 44
VDDS2 13
VDDS3 22
VDDS
VDDS
VDDS
VDDS
C18
0.1U
C19
0.1U
C20
0.1U
C21
0.1U
GND
VDDS_DCDC 34
DCDC_SW 33 DCDC_SW
DCOUPL 23
L4
6.8 uH
VDDR
C17
1U
C24
22U
GND
GND