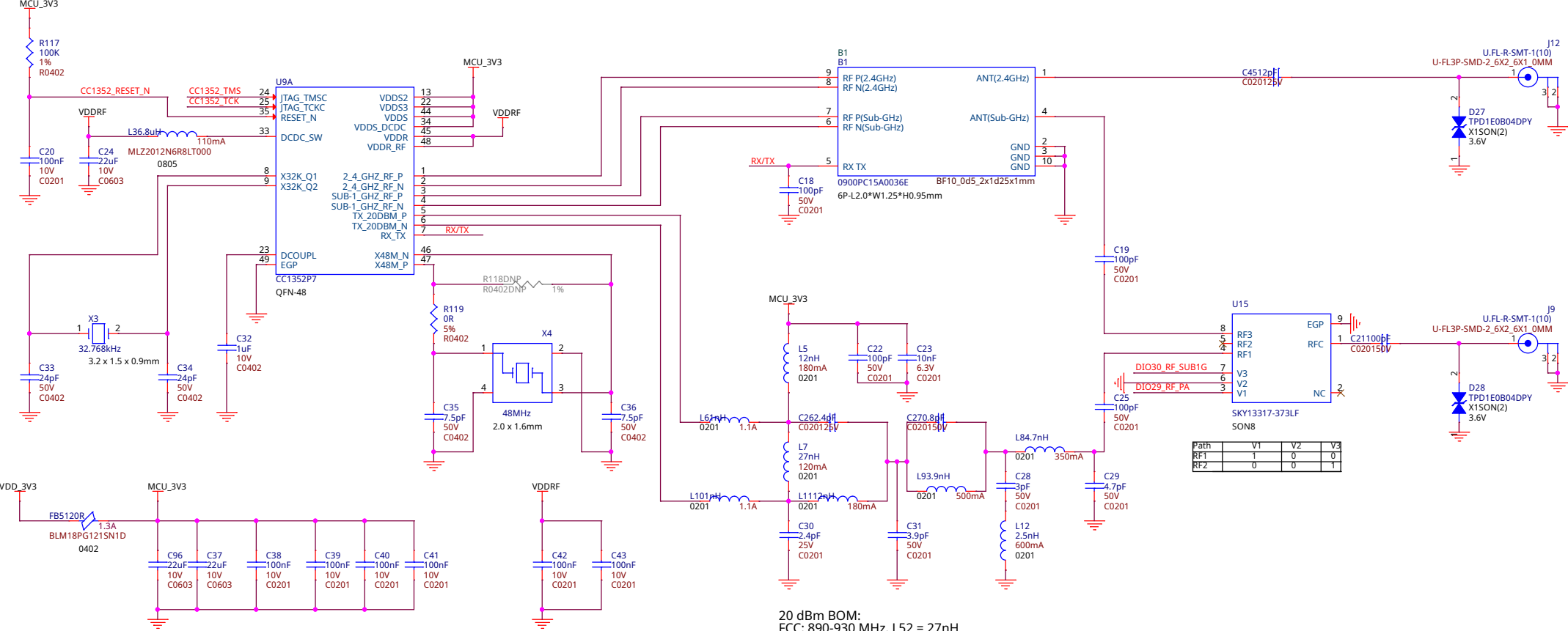

Layout Note:

Place C37 and C38 close to pin 34.
Place C39, C40, C41 close to pin 13, pin 22, pin44.

Layout Note:

Place these capacitors close to pin45, pin48.