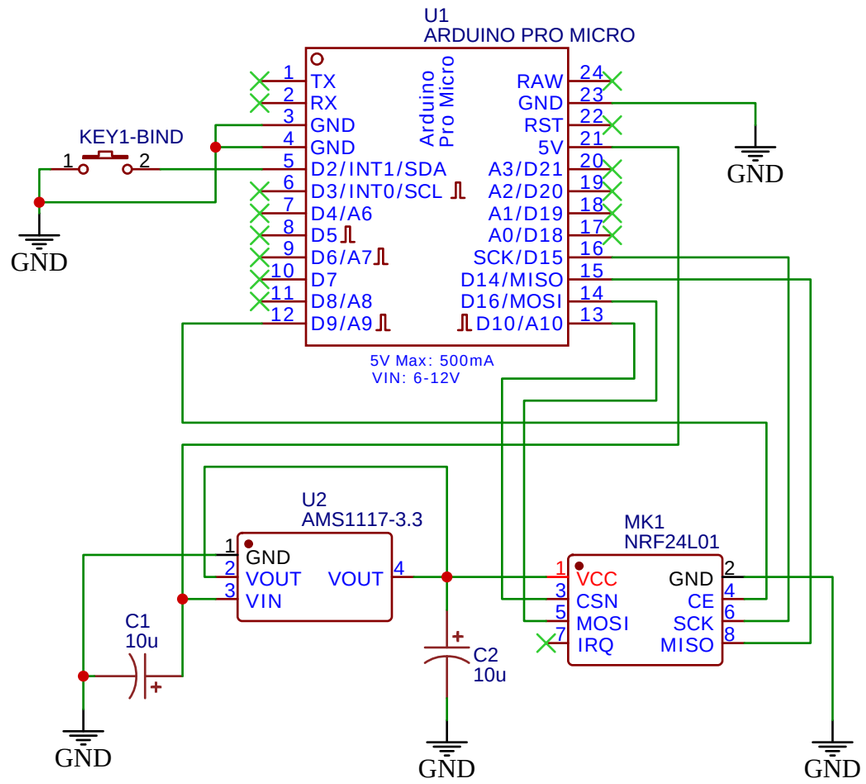

TITLE: Reciever for Simulator		REV: 1.0
EasyEDA	Company: Your Company	Sheet: 1/1
	Date: 2024-09-18 Drawn By: lostclus	