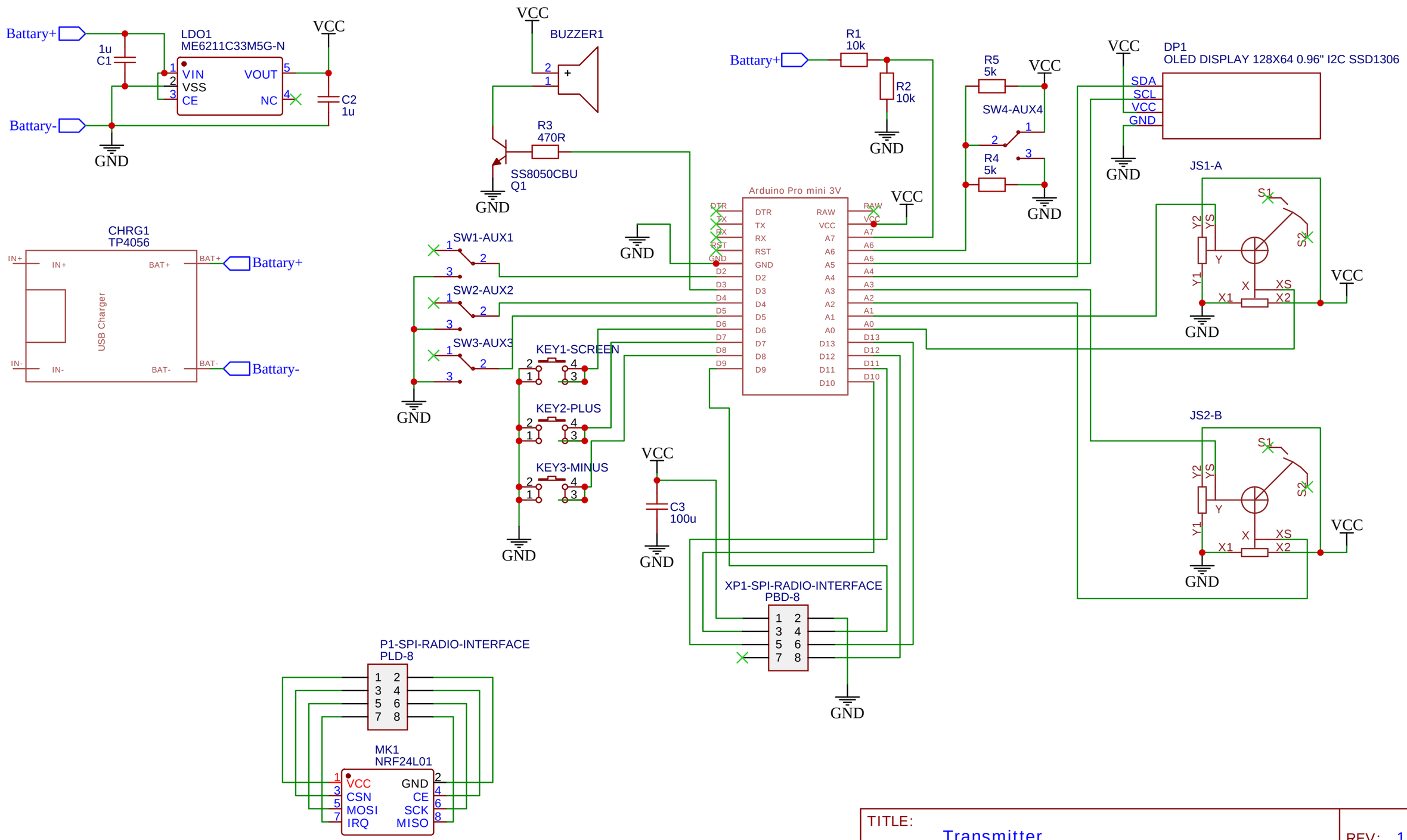

TITLE: Transmitter	REV: 1.0
EasyEDA — Company: Your Company	Sheet: 1/1
Date: 2023-07-29 Drawn By: lostclus	