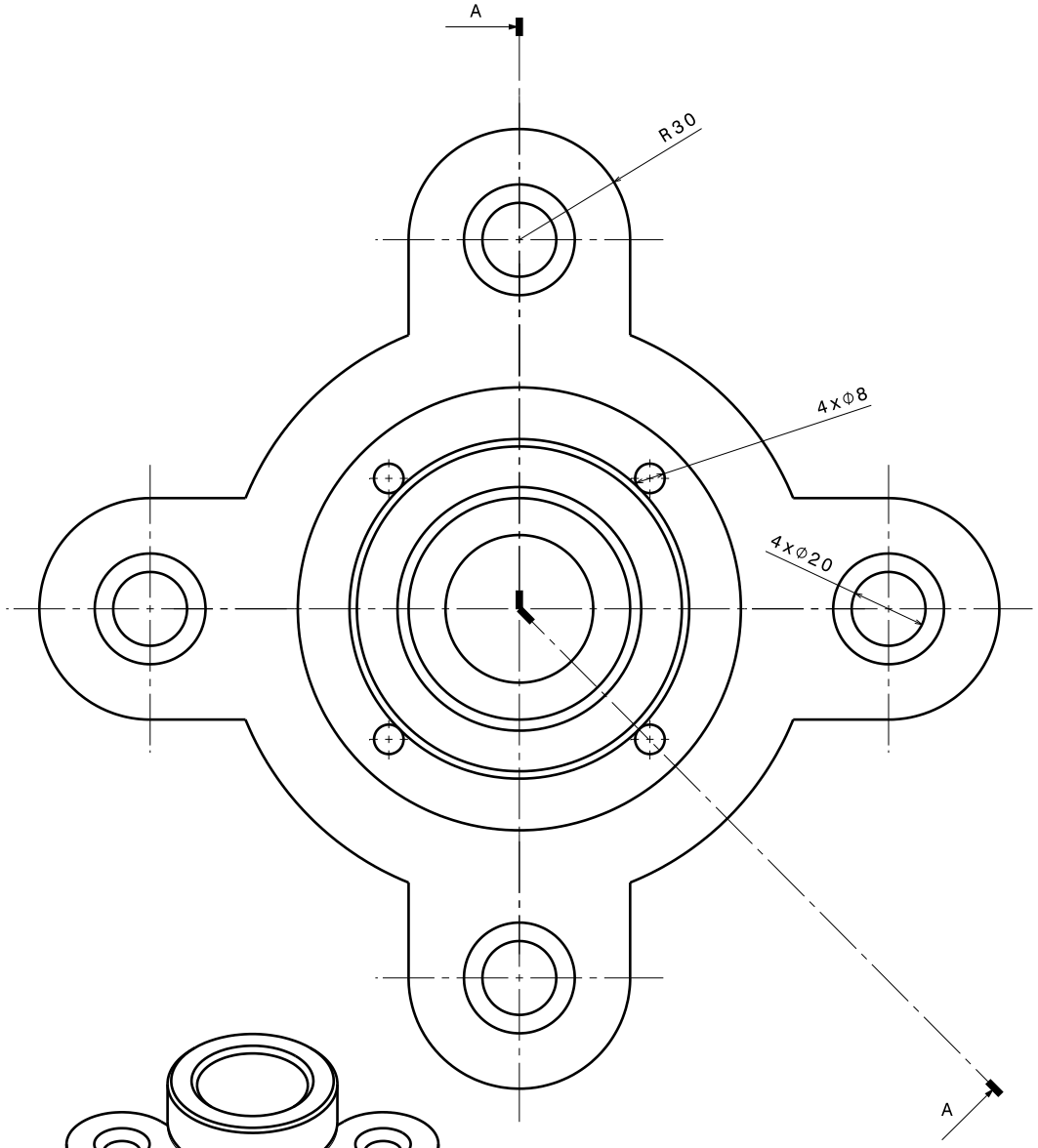

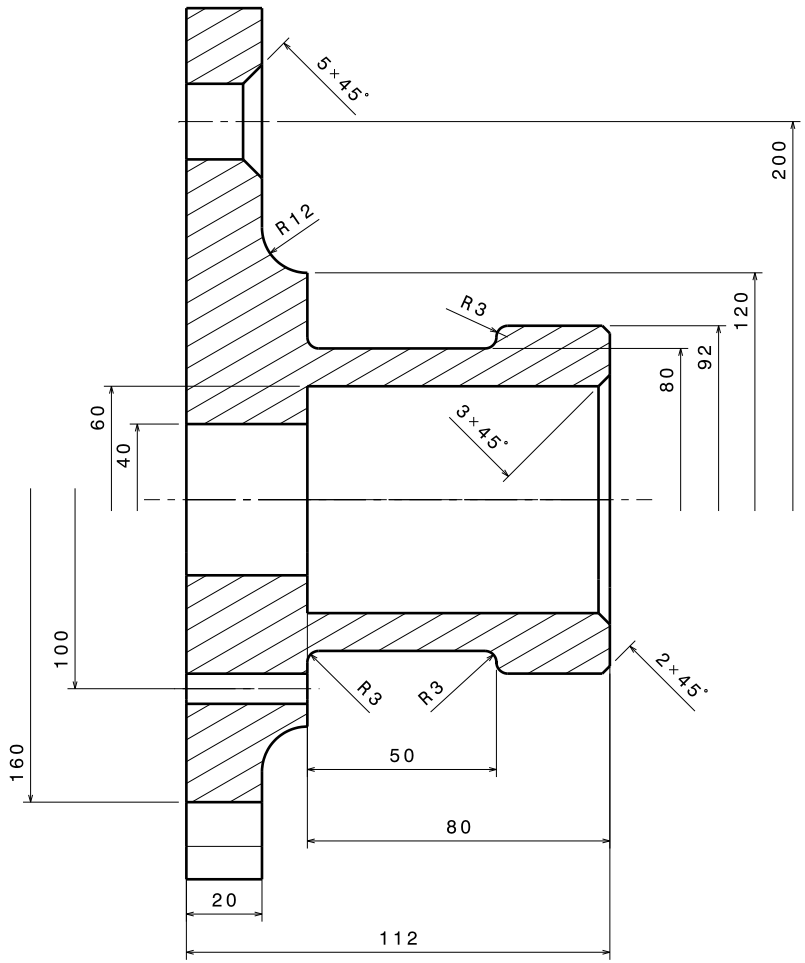

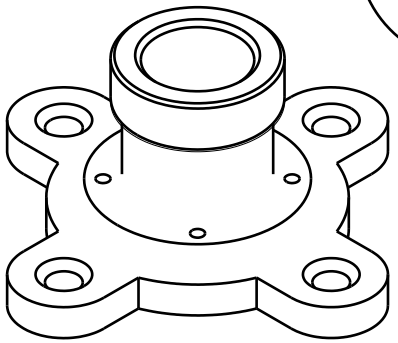

Vista isometrica
Scala: 1:2

DESIGNED BY: Maria Vittoria Cinquegrani DATE: 12/05/2022	Prototipazione VIrtuale		
CHECKED BY: Giuseppe Di Gironimo DATE: XXX			
SIZE A2	Università di Napoli Federico II		
SCALE 1:1	WEIGHT (kg) XXX	DRAWING NUMBER PV2022_ES020006	SHEET 1/1

This drawing is our property; it can't be reproduced or communicated without our written agreement.