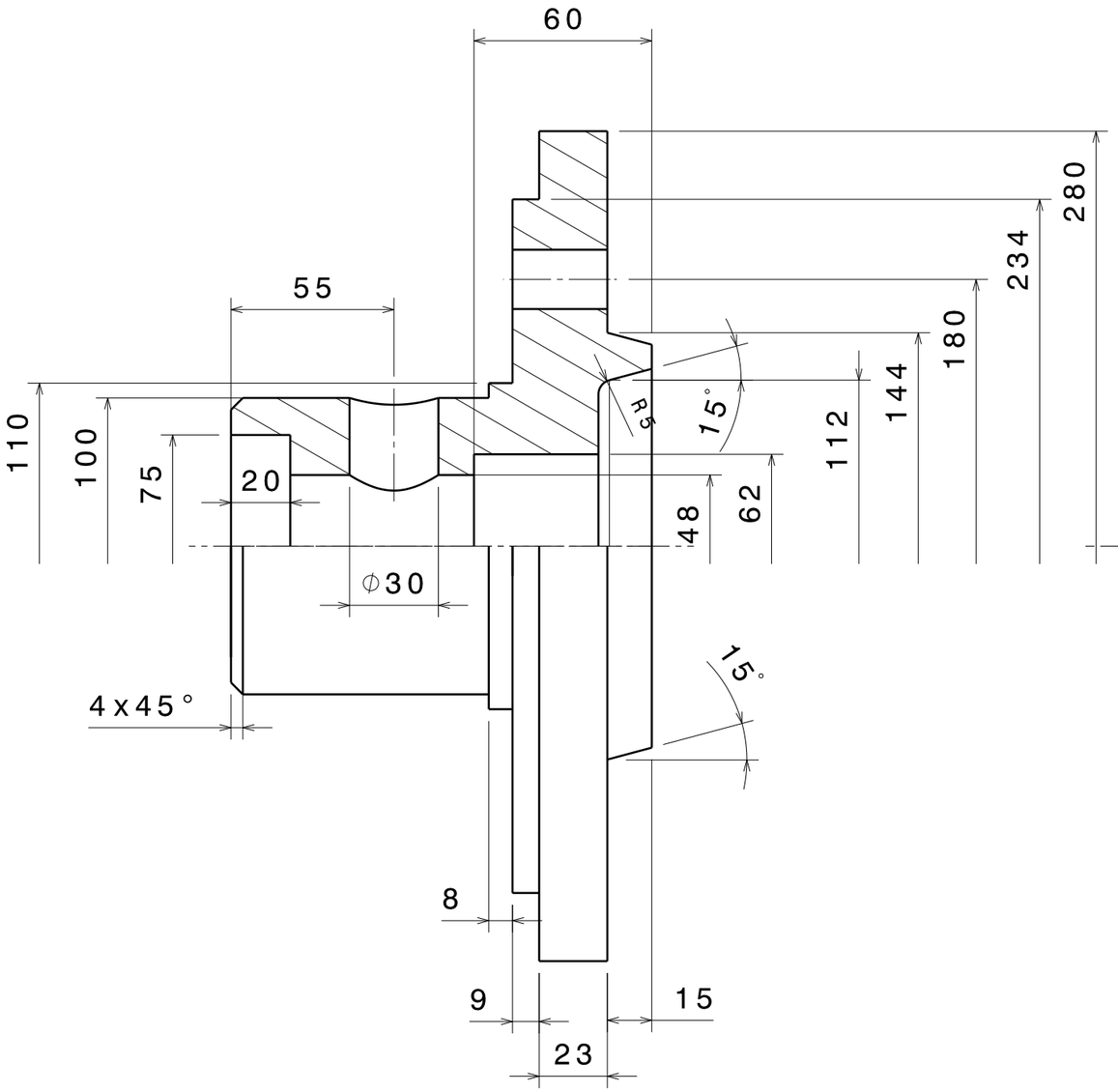

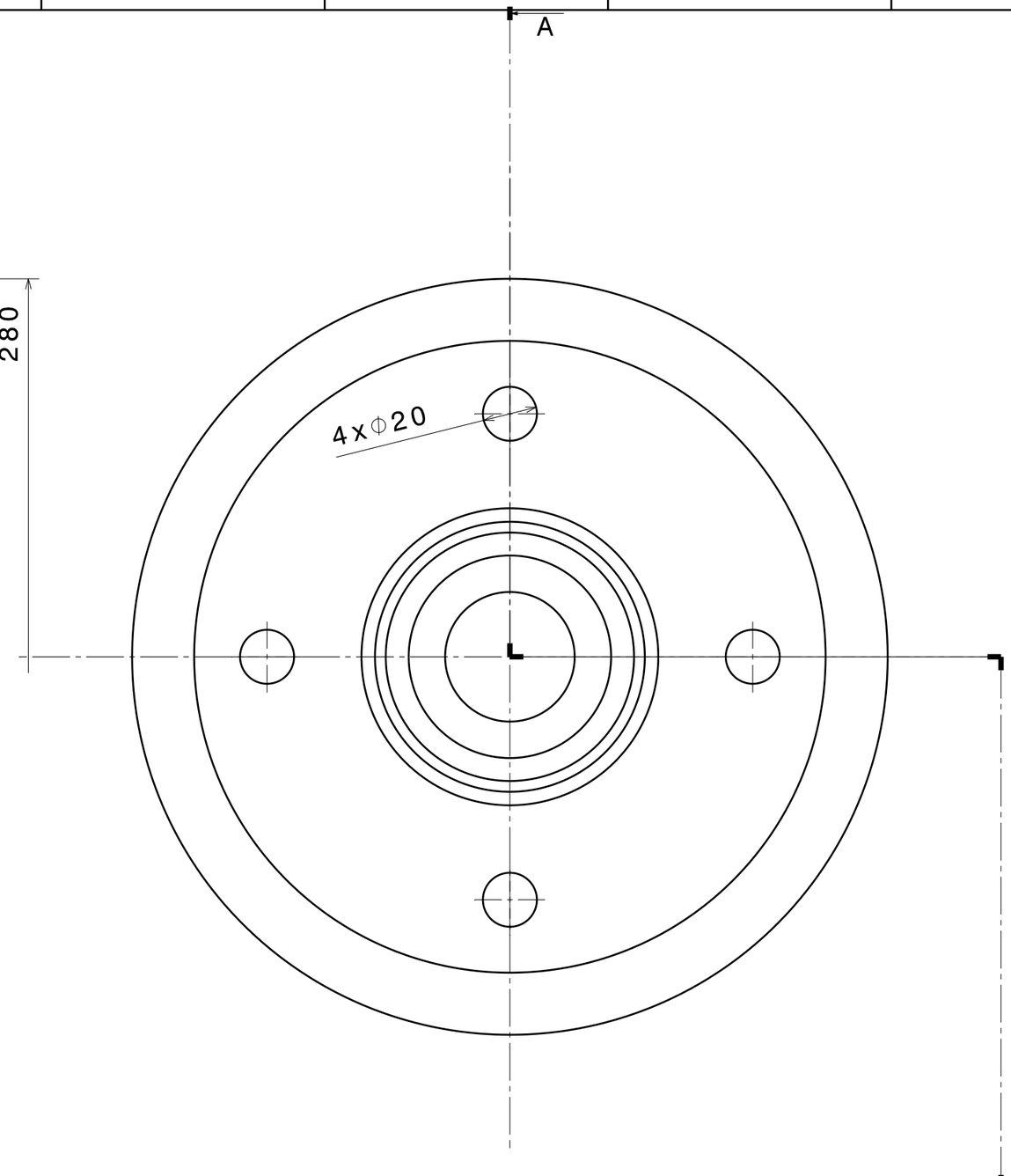

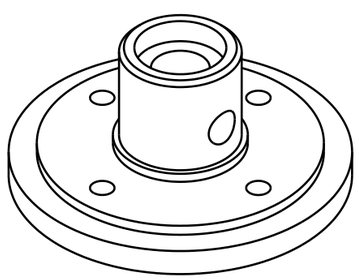

Vista isometrica
Scala: 1:5

DESIGNED BY: Maria Vittoria Cinquegrani DATE: 12/05/2022		Prototipazione Virtuale	
CHECKED BY: Giuseppe Di Gironimo DATE: XXX			
SIZE A3		Università di Napoli Federico II	
SCALE 1:2	WEIGHT (kg) XXX	DRAWING NUMBER PV2022_ES020002	SHEET 1/1

This drawing is our property; it can't be reproduced or communicated without our written agreement.