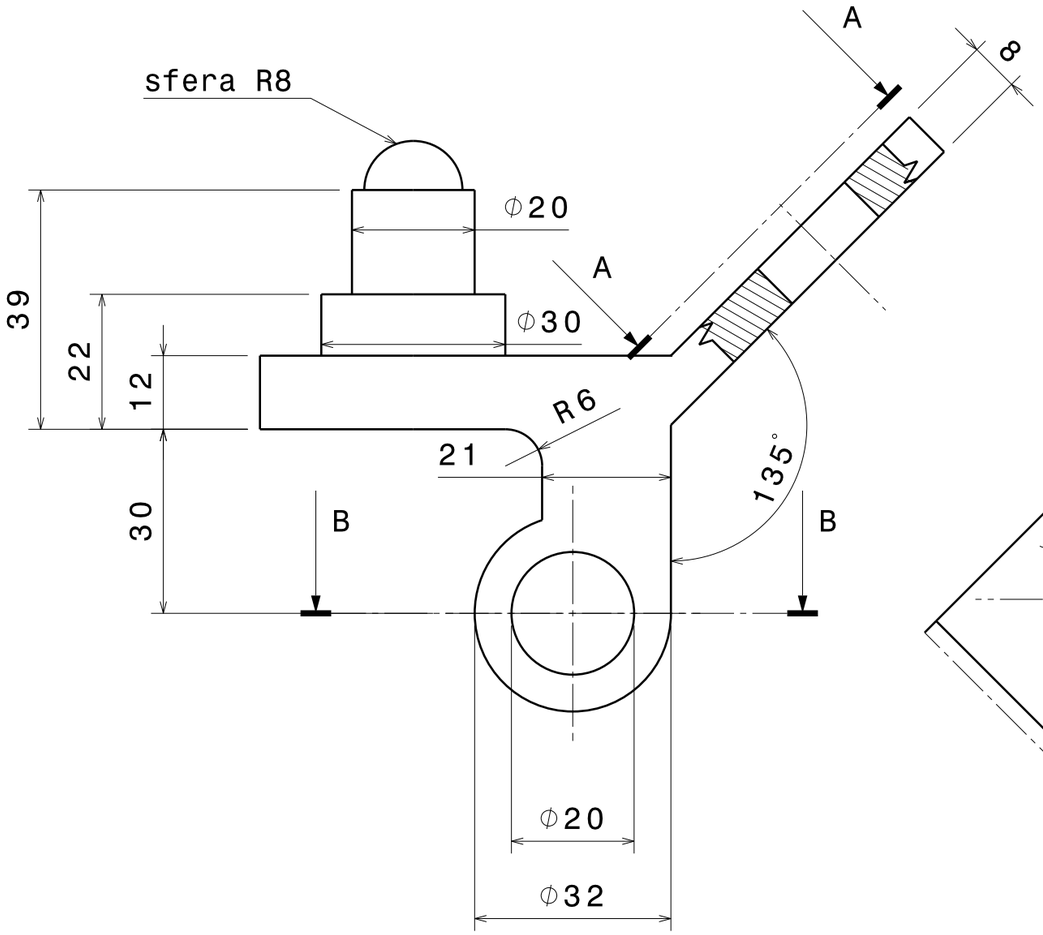

Section view B-B

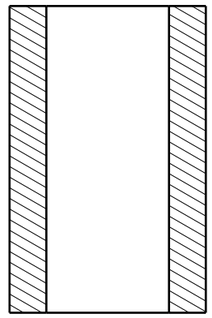

Section view A-A

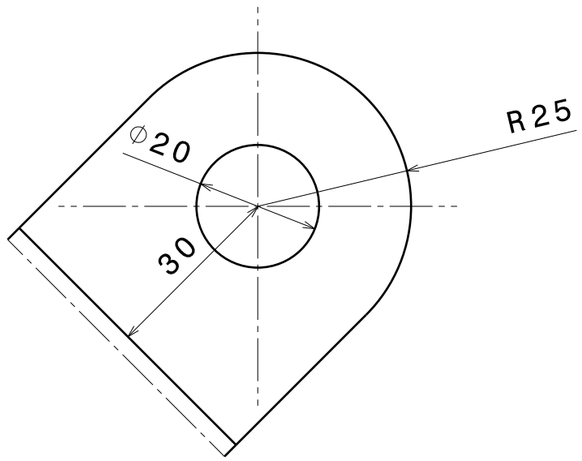

Isometric view
Scale: 1:1

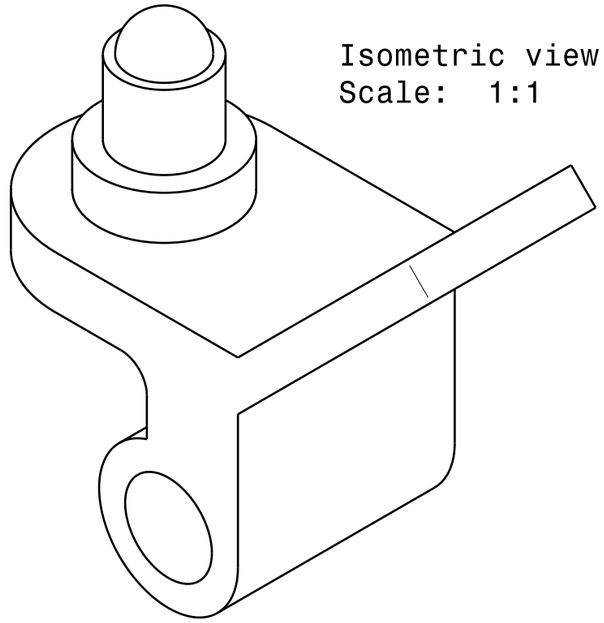

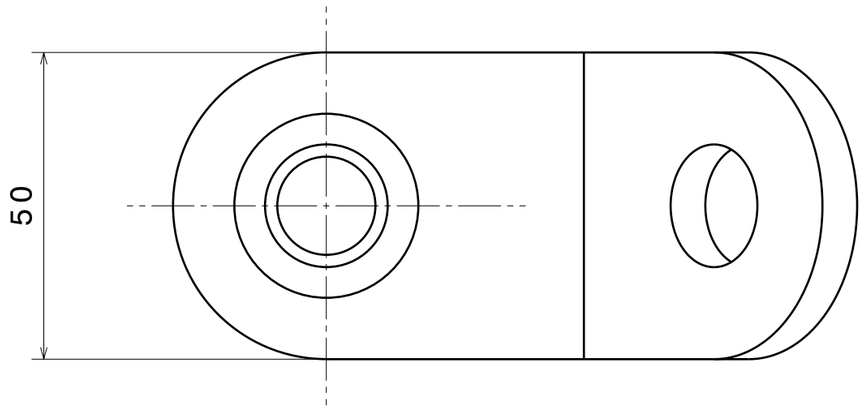

DESIGNED BY: Luigi Catello DATE: 22/12/2023	Prototipazione Virtuale		
CHECKED BY: XXX DATE: XXX			
SIZE A3	Università di Napoli Federico II		
SCALE 1:1	WEIGHT (kg) XXX	DRAWING NUMBER PV2324_ES0205	SHEET 1/1

This drawing is our property; it can't be reproduced or communicated without our written agreement.