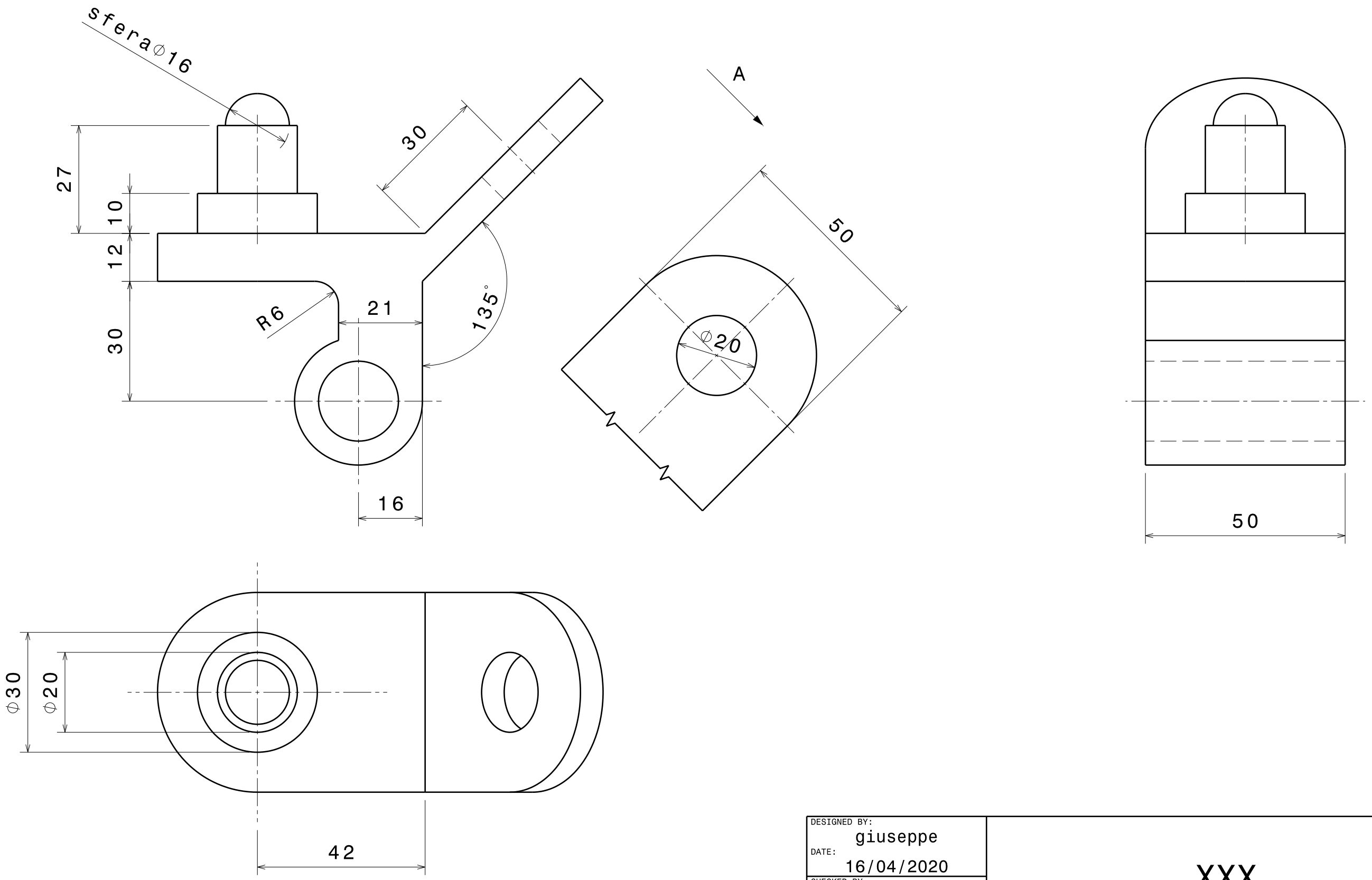

DESIGNED BY: giuseppe DATE: 16/04/2020	XXX		
CHECKED BY: XXX DATE: XXX			
SIZE A3	Università di Napoli Federico II		
SCALE 1:1	WEIGHT (kg) XXX	DRAWING NUMBER XXX	SHEET 1/1

This drawing is our property; it can't be reproduced or communicated without our written agreement.

I	_
H	_
G	_
F	_
E	_
D	_
C	_
B	_
A	_