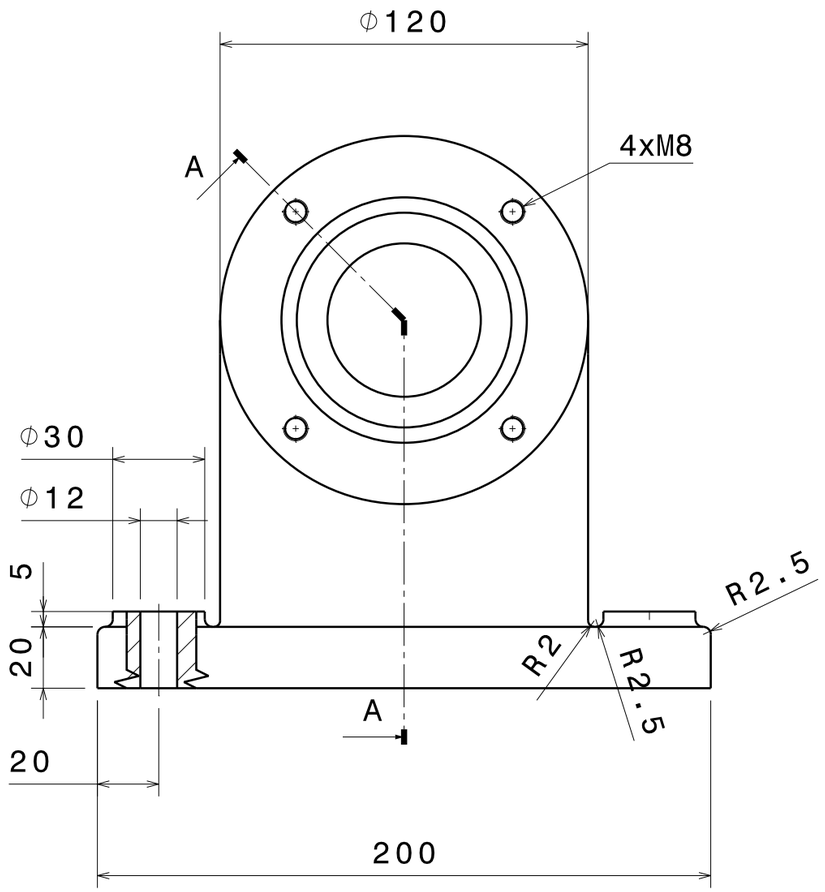

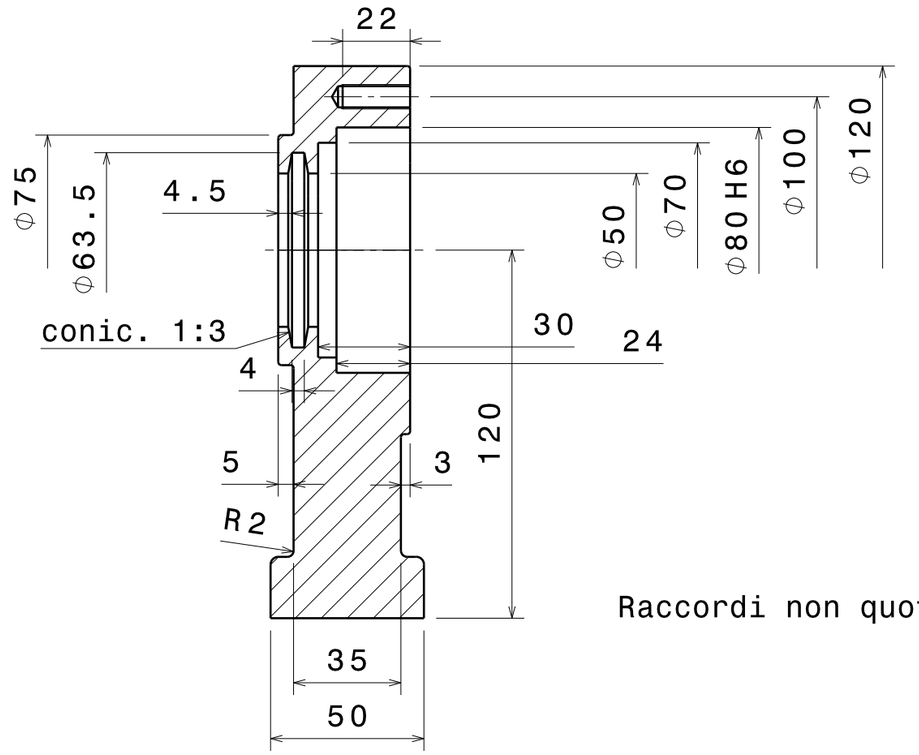

Raccordi non quotati R1

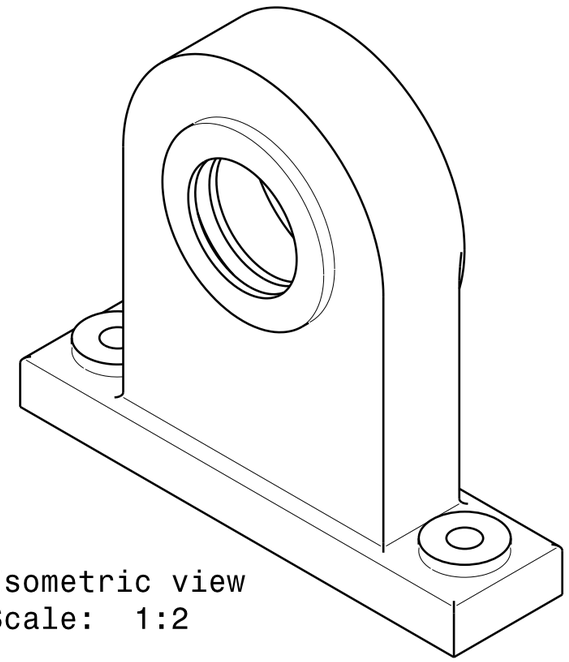

Isometric view
Scale: 1:2

DESIGNED BY: Luigi Catello DATE: 01/02/2024		Prototipazione Virtuale	
CHECKED BY: XXX DATE: XXX			
SIZE A3		Università di Napoli Federico II	
SCALE 1:2	WEIGHT (kg) XXX	DRAWING NUMBER PV2324_ES0801	SHEET 1/1

This drawing is our property; it can't be reproduced or communicated without our written agreement.