Modify note

Version	Date	Author	Change Note	Approved
V00	20190118	WXZ	First edictor	

DC_IN

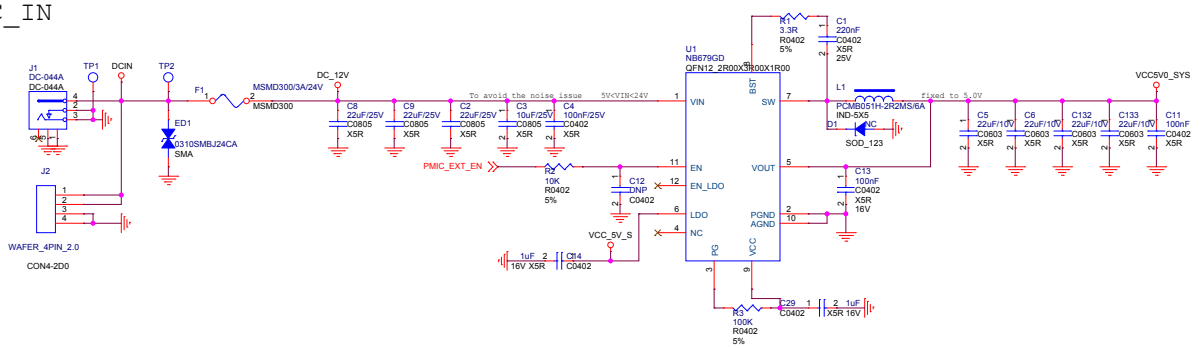

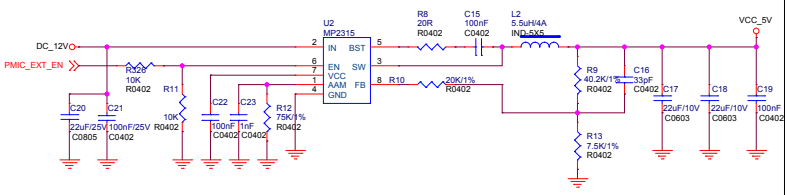

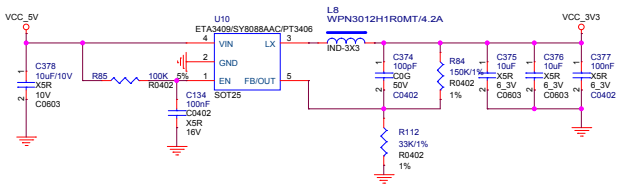

VCC_1V8

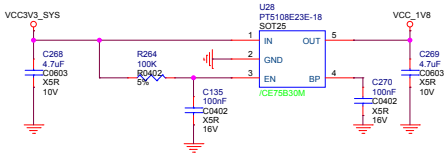

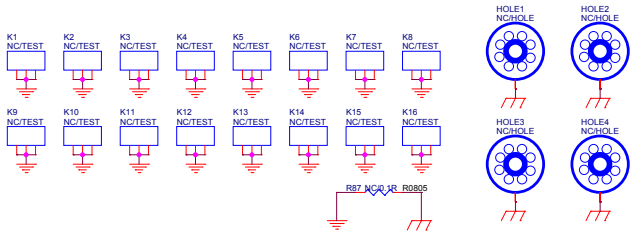

Firefly www.t-firefly.com

Title:	POWER_IN	
File:	MB-JD4-RK3399&3399PRO	REV: V0.0
Create Date:	Thursday, October 18, 2018	Page Num:2
Modify Date:	Tuesday, April 30, 2019	Page Total: 21

TYPEC0 HOST POWER

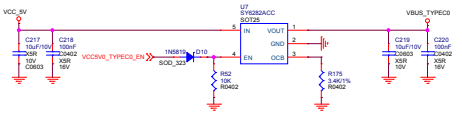

TYPEC0

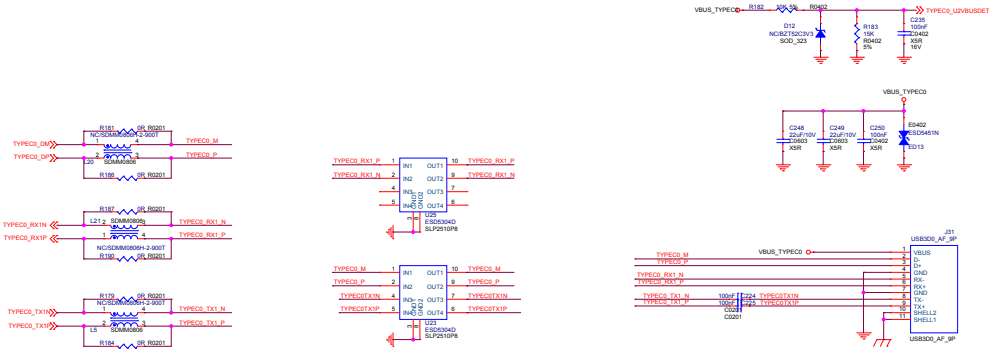

Firefly www.t-firefly.com

Title: TYPE-C0	
File: MB-JD4-RK3399A3399PRO	REV: V0.0
Create Date: Monday, December 24, 2018	Page Num: 3
Modify Date: Tuesday, April 30, 2019	Page Total: 21

HOST POWER

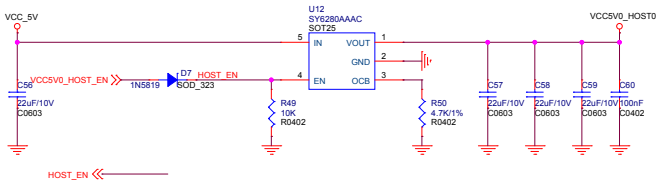

USB2.0

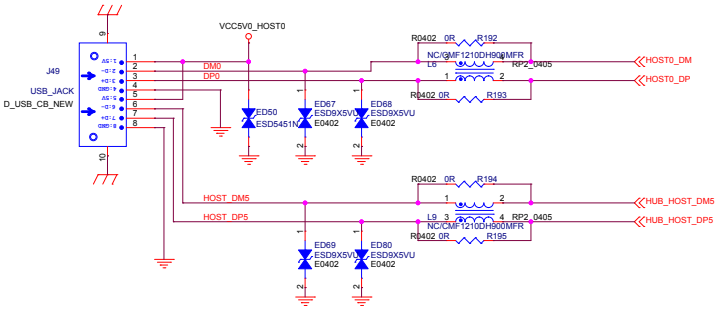

www.t-firefly.com

Title:	HUB/USB2.0 Port	
File:	MB-JD4-RK3399&3399PRO	REV: V0.0
Create Date:	Friday, October 19, 2018	Page Num:4
Modify Date:	Tuesday, April 30, 2019	Page Total: 21

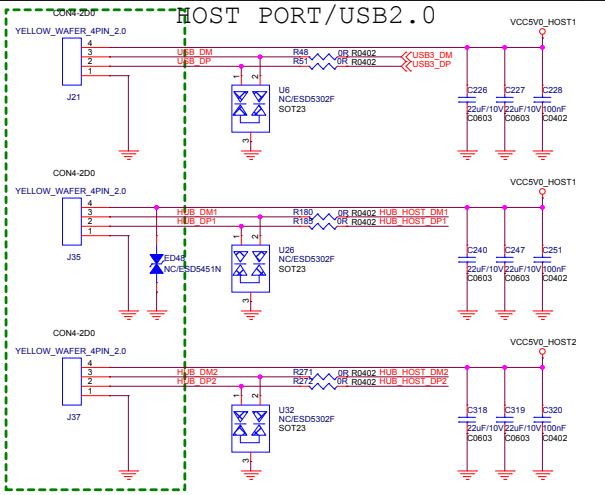

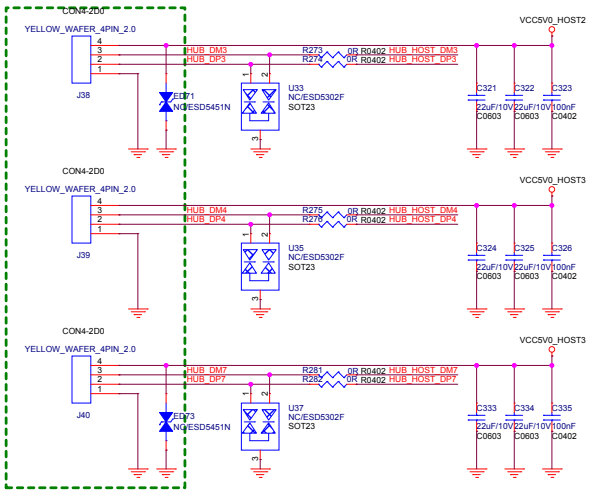

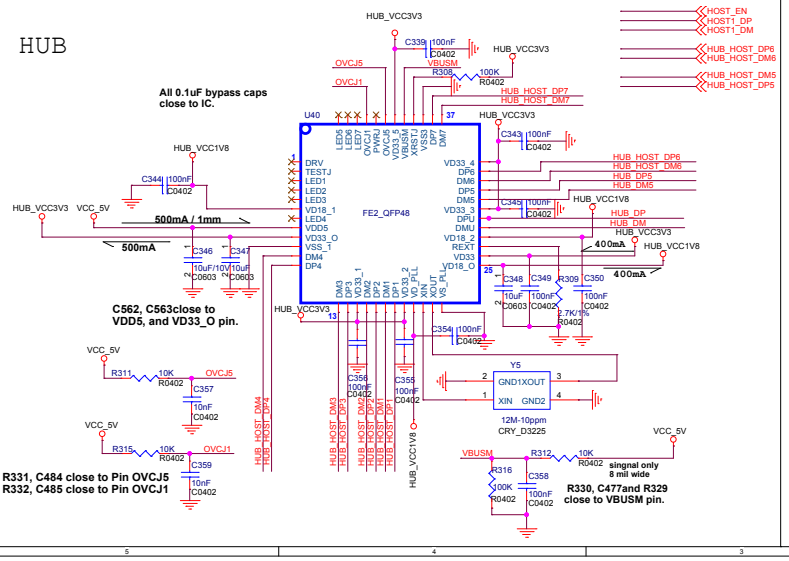

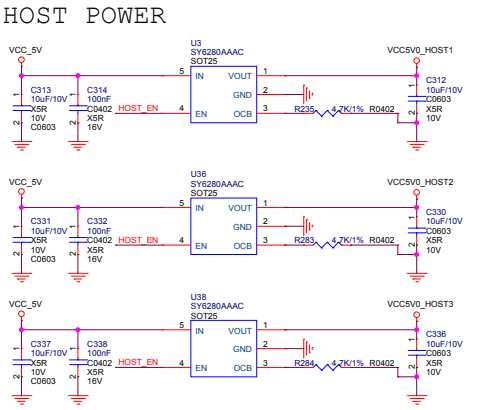

HUB_HOST_DP5	R287	NC/0R R0402	HOST1_DP		
HUB_HOST_DM5	R288	NC/0R R0402	HOST1_DM		
HUB_DP5	R289	0R R0402	HUB_HOST_DP5		
HUB_DM5	R290	0R R0402	HUB_HOST_DM5		
HUB_DP	R291	0R R0402	HOST1_DP		
HUB_DM	R307	0R R0402	HOST1_DM		

www.t-firefly.com

Title:	USB HUB	
File:	MB-JD4-RK3399&3399PRO	REV: V0.0
Create Date:	Wednesday, January 02, 2019	Page Num: 5
Modify Date:	Tuesday, April 30, 2019	Page Total: 21

TF CARD

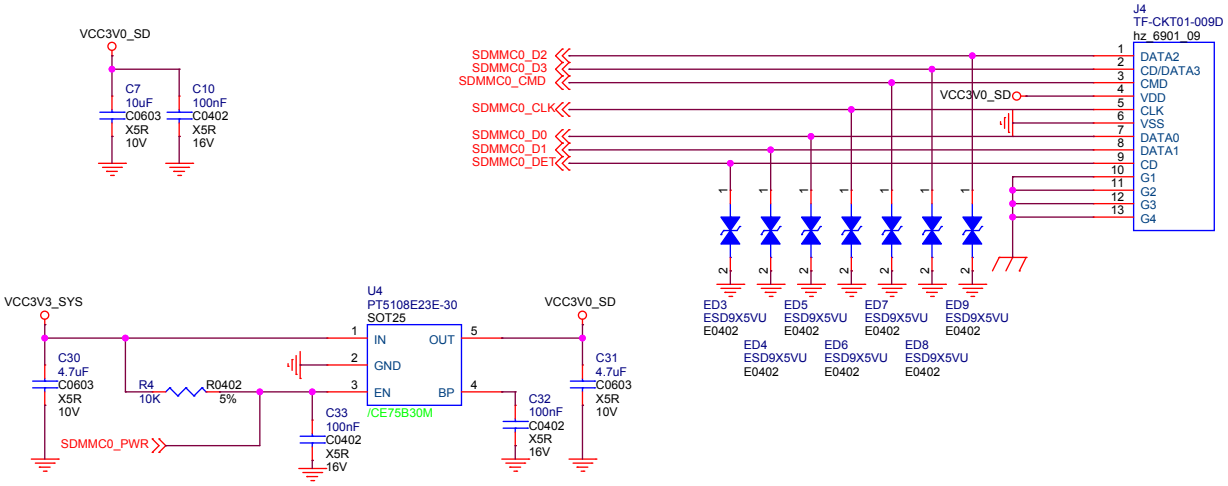

www.t-firefly.com

Title:	TF Card/EFUSE	
File:	MB-JD4-RK3399&3399PRO	REV: V0.0
Create Date:	Thursday, October 18, 2018	Page Num: 6
Modify Date:	Tuesday, April 30, 2019	Page Total: 21

DEBUG

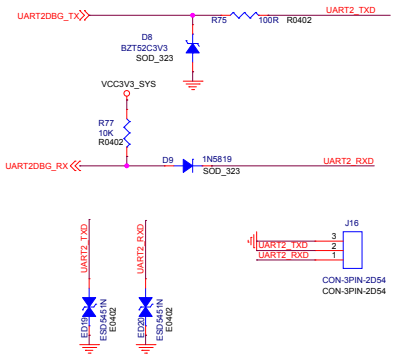

RTC_BAT

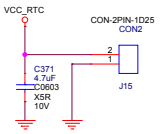

LED

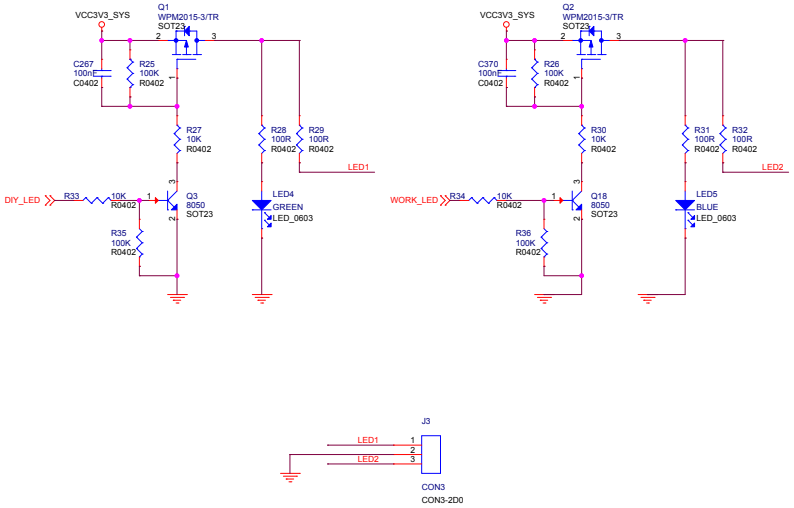

KEY

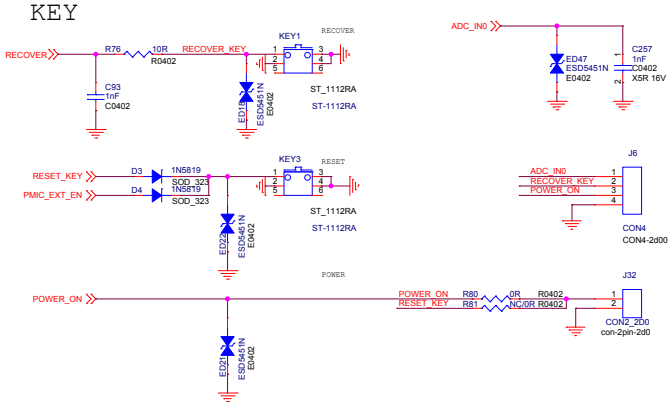

Firefly www.t-firefly.com

Title:	KEY/LED/DEBUG	
File:	MB-JD4-RK3399&3399PRO	REV: V0.0
Create Date:	Friday, October 19, 2018	Page Num: 7
Modify Date:	Tuesday, April 30, 2019	Page Total: 21

HDMI OUT

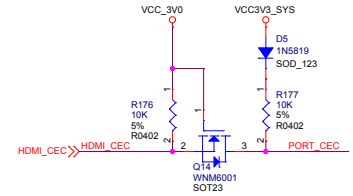
VCC_3V0
VCC3V3_SYS
D5
1N5819
SOD_123
R176
10K
5%
R0402
R177
10K
5%
R0402
HDMI_CEC
HDMI_CEC
PORT_CEC
Q14
WNM6001
SOT23

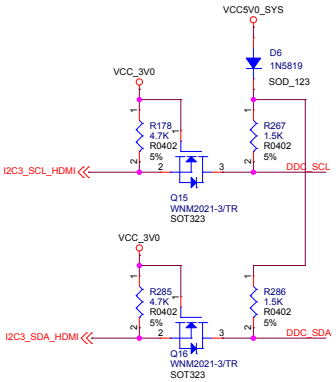
VCC5V0_SYS
D6
1N5819
SOD_123
VCC_3V0
R178
4.7K
R0402
5%
R267
1.5K
R0402
5%
I2C3_SCL_HDMI
DDC_SCL
Q15
WNM2021-3/TR
SOT323
VCC_3V0
R285
4.7K
R0402
5%
R286
1.5K
R0402
5%
I2C3_SDA_HDMI
DDC_SDA
Q16
WNM2021-3/TR
SOT323

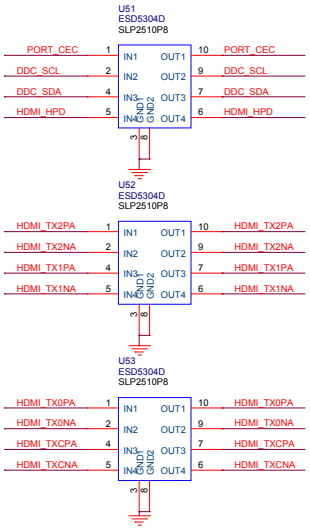
U51
ESD5304D
SLP2510P8
PORT_CEC
DDC_SCL
DDC_SDA
HDMI_HPD
IN1
IN2
IN3
IN4
OUT1
OUT2
OUT3
OUT4
GND1
GND2
U52
ESD5304D
SLP2510P8
HDMI_TX2PA
HDMI_TX2NA
HDMI_TX1PA
HDMI_TX1NA
U53
ESD5304D
SLP2510P8
HDMI_TX0PA
HDMI_TX0NA
HDMI_TXCPA
HDMI_TXCNA

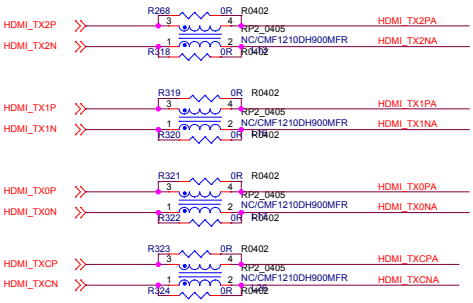
HDMI_TX2P
HDMI_TX2N
R268
0R
R0402
RP2_0405
NC/CMF1210DH900MFR
R318
HDMI_TX2PA
HDMI_TX2NA
HDMI_TX1P
HDMI_TX1N
R319
R320
HDMI_TX1PA
HDMI_TX1NA
HDMI_TX0P
HDMI_TX0N
R321
R322
HDMI_TX0PA
HDMI_TX0NA
HDMI_TXCP
HDMI_TXCN
R323
R324
HDMI_TXCPA
HDMI_TXCNA

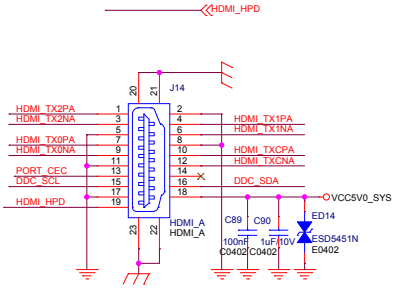
HDMI_HPD
J14
HDMI_TX2PA
HDMI_TX2NA
HDMI_TX0PA
HDMI_TX0NA
PORT_CEC
DDC_SCL
HDMI_HPD
HDMI_TX1PA
HDMI_TX1NA
HDMI_TXCPA
HDMI_TXCNA
DDC_SDA
VCC5V0_SYS
HDMI_A
HDMI_A
C89
100nF
C0402
C90
1uF/10V
C0402
ED14
ESD5451N
E0402

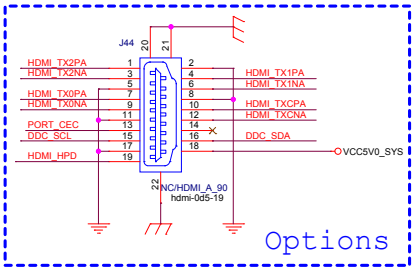
J44
HDMI_TX2PA
HDMI_TX2NA
HDMI_TX0PA
HDMI_TX0NA
PORT_CEC
DDC_SCL
HDMI_HPD
HDMI_TX1PA
HDMI_TX1NA
HDMI_TXCPA
HDMI_TXCNA
DDC_SDA
VCC5V0_SYS
NC/HDMI_A_90
hdmi-0d5-19
Options

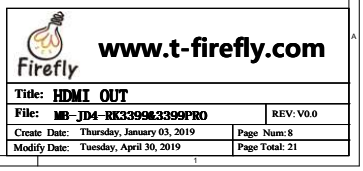
Firefly
www.t-firefly.com
Title: HDMI OUT
File: MB_JD4_RK3399&3399PRO
REV: V0.0
Create Date: Thursday, January 03, 2019
Page Num: 8
Modify Date: Tuesday, April 30, 2019
Page Total: 21

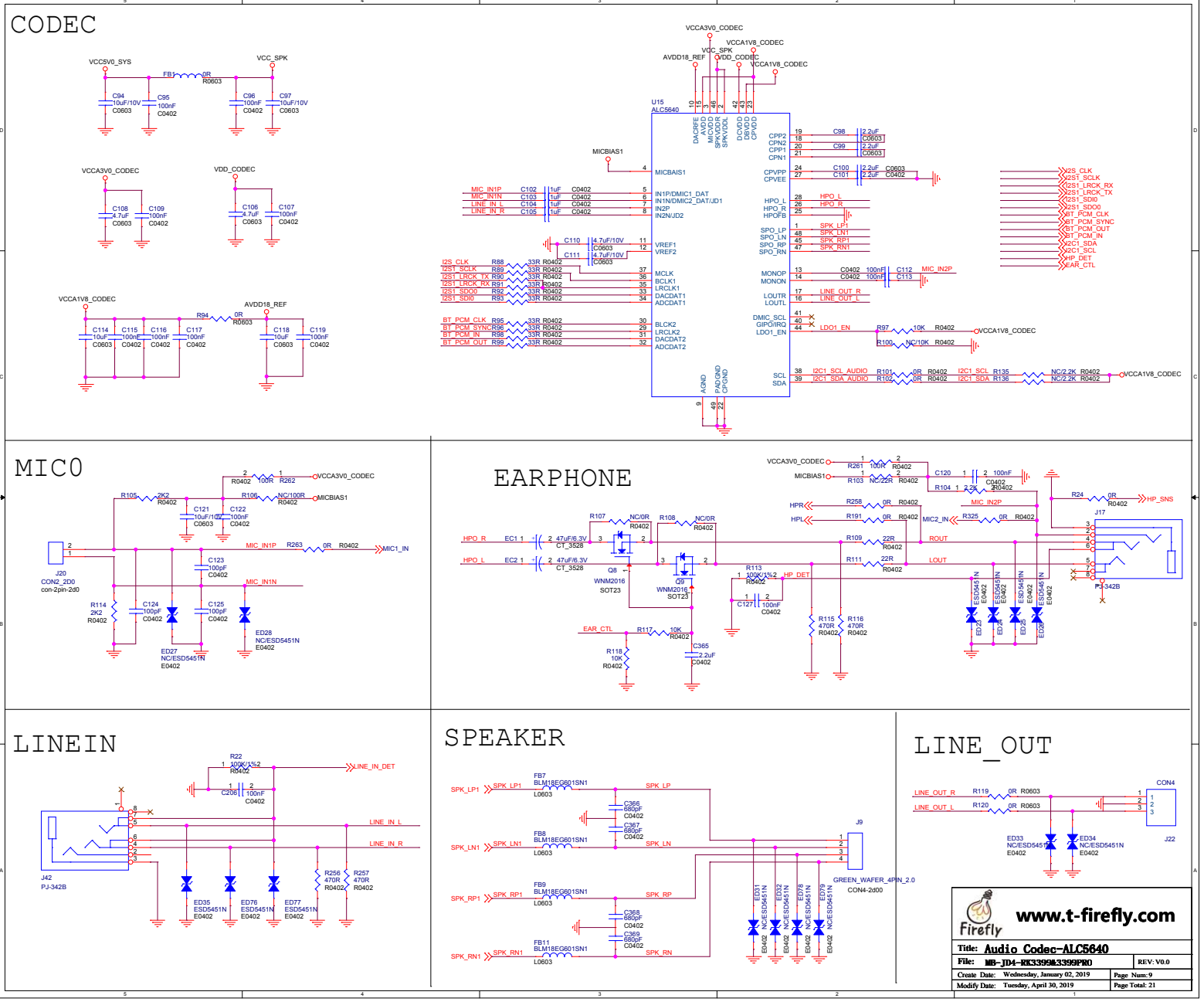
CODEC
VCC5V0_SYS
VCC_SPK
FB1
0R
R0603
C94
10uF/10V
C0603
C95
100nF
C0402
C96
100nF
C0402
C97
10uF/10V
C0603
VCCA3V0_CODEC
VDD_CODEC
C108
4.7uF
C0603
C109
100nF
C0402
C106
4.7uF
C0603
C107
100nF
C0402
VCCA1V8_CODEC
AVDD18_REF
R94
0R
R0603
C114
10uF
C0603
C115
100nF
C0402
C116
100nF
C0402
C117
100nF
C0402
C118
10uF
C0603
C119
100nF
C0402
VCCA3V0_CODEC
VCC_SPK
VCCA1V8_CODEC
AVDD18_REF
VDD_CODEC
VCCA1V8_CODEC
U15
ALC5640
DACREF
AVDD
MICVDD
SPKVDDR
SPKVDDL
DCVDD
DBVDD
CPVDD
MICBIAS1
MICBIAS1
MIC_IN1P
MIC_IN1N
LINE_IN_L
LINE_IN_R
C102
C103
C104
C105
1uF
C0402
IN1P/DMIC1_DAT
IN1N/DMIC2_DAT/JD1
IN2P
IN2N/JD2
C110
C111
4.7uF/10V
C0603
VREF1
VREF2
I2S_CLK
I2S1_SCLK
I2S1_LRCK_TX
I2S1_LRCK_RX
I2S1_SDO0
I2S1_SDI0
R88
R89
R90
R91
R92
R93
33R R0402
MCLK
BCLK1
LRCLK1
DACDAT1
ADCDAT1
BT_PCM_CLK
BT_PCM_SYNC
BT_PCM_IN
BT_PCM_OUT
R95
R96
R98
R99
BLCK2
LRCLK2
DACDAT2
ADCDAT2
CPP2
CPN2
CPP1
CPN1
C98
C99
2.2uF
C0603
CPVPP
CPVEE
C100
C101
2.2uF
C0603
C0402
HPO_L
HPO_R
HPOFB
SPO_LP
SPO_LN
SPO_RP
SPO_RN
SPK_LP1
SPK_LN1
SPK_RP1
SPK_RN1
MONOP
MONON
LOUTR
LOUTL
LINE_OUT_R
LINE_OUT_L
C112
C113
100nF
C0402
MIC_IN2P
DMIC_SCL
GIPO/IRQ
LDO1_EN
R97
R100
10K
NC/10K
R0402
SCL
SDA
I2C1_SCL_AUDIO
I2C1_SDA_AUDIO
R101
R102
0R R0402
I2C1_SCL
I2C1_SDA
R135
R136
NC/2.2K R0402
AGND
PAD/GND
CPGND
I2S_CLK
I2S1_SCLK
I2S1_LRCK_RX
I2S1_LRCK_TX
I2S1_SDI0
BT_PCM_CLK
BT_PCM_SYNC
BT_PCM_OUT
BT_PCM_IN
I2C1_SDA
I2C1_SCL
HP_DET
EAR_CTL
MIC0
VCCA3V0_CODEC
R105
2K2
R0402
R106
NC/100R
R0402
MICBIAS1
R262
100R
C121
10uF/10V
C0603
C122
100nF
C0402
J20
CON2_2D0
con-2pin-2d0
MIC_IN1P
R263
0R R0402
MIC1_IN
C123
100nF
C0402
MIC_IN1N
R114
2K2
R0402
C124
100nF
C0402
C125
100nF
C0402
ED27
NC/ESD5451N
E0402
ED28
NC/ESD5451N
E0402
EARPHONE
VCCA3V0_CODEC
MICBIAS1
R261
100R
R0402
R103
NC/22R
R0402
C120
100nF
C0402
R104
2.2K
R0402
HPR
HPL
R258
R191
0R R0402
MIC_IN2P
MIC2_IN
R325
R24
0R
R0402
HP_SNS
J17
PJ-342B
R107
NC/0R
R0402
R108
NC/0R
R0402
HPO_R
HPO_L
EC1
EC2
47uF/6.3V
CT_3528
Q8
WNM2016
SOT23
Q9
WNM2016
SOT23
R109
R111
22R
R0402
ROUT
LOUT
R113
100K/1%2
R0402
C127
100nF
C0402
HP_DET
R115
R116
470R
R0402
ESD5451N
E0402
EAR_CTL
R117
10K
R0402
R118
10K
R0402
C365
2.2uF
C0402
LINEIN
R22
100K/1%2
R0402
C208
100nF
C0402
LINE_IN_DET
LINE_IN_L
LINE_IN_R
J42
PJ-342B
ED35
ESD5451N
E0402
ED76
ESD5451N
E0402
ED77
ESD5451N
E0402
R256
470R
R0402
R257
470R
R0402
SPEAKER
SPK_LP1
SPK_LN1
SPK_RP1
SPK_RN1
FB7
FB8
FB9
FB11
BLM18EG601SN1
L0603
SPK_LP
SPK_LN
SPK_RP
SPK_RN
C366
C367
C368
C369
680pF
C0402
J9
GREEN_WAFER_4PIN_2.0
CON4-2d00
ED31
ED32
ED78
ED79
NC/ESD5451N
E0402
LINE_OUT
LINE_OUT_R
LINE_OUT_L
R119
R120
0R R0603
CON4
J22
ED33
NC/ESD5451N
E0402
ED34
NC/ESD5451N
E0402
www.t-firefly.com
Title: Audio Codec-ALC5640
File: MB-JD4-RK3399&3399PRO
REV: V0.0
Create Date: Wednesday, January 02, 2019
Page Num: 9
Modify Date: Tuesday, April 30, 2019
Page Total: 21

IR Receiver

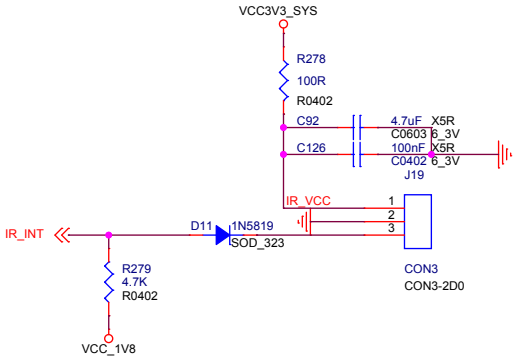

FAN

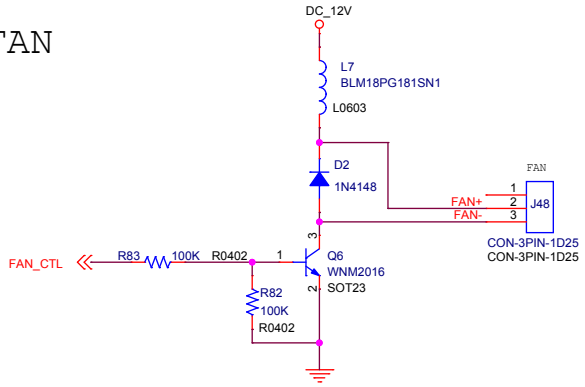

Encryption

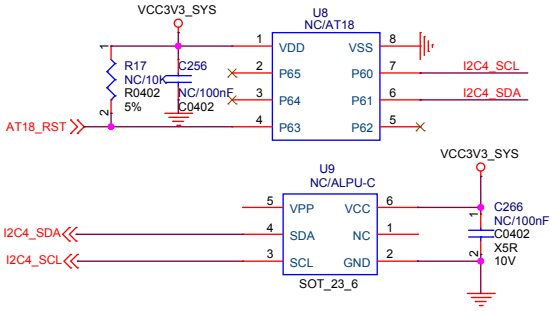

Firefly www.t-firefly.com

Title:	IR/Encryption/FAN	
File:	MB-JD4-RK3399&3399PRO	REV: V0.0
Create Date:	Friday, October 19, 2018	Page Num: 10
Modify Date:	Tuesday, April 30, 2019	Page Total: 21

M2.NGFF

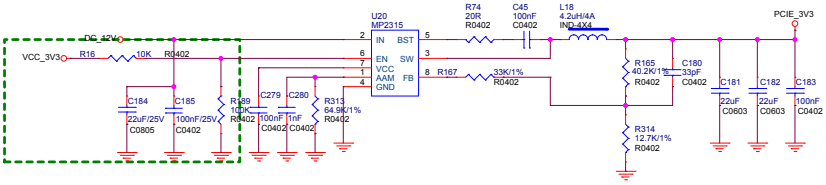

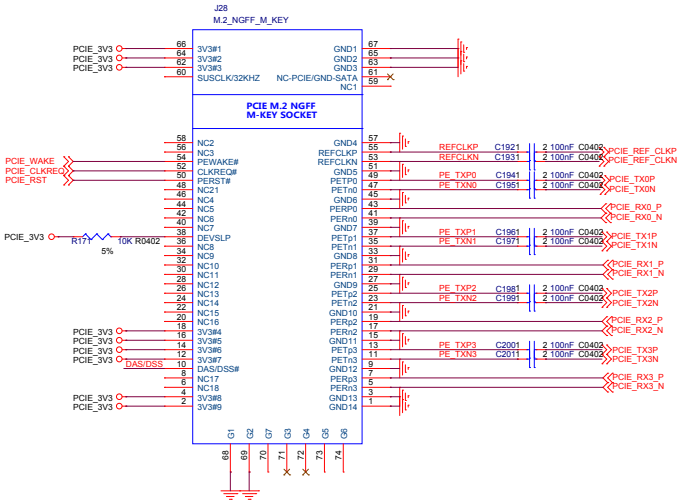

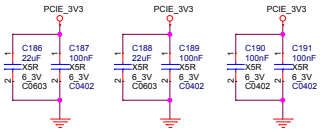

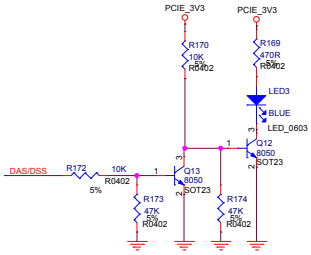

www.t-firefly.com

Title:	3G-4G-MODULE/M2.NGFF-PCIE	
File:	MB-JD4-RK3399&3399PRO	REV: V0.0
Create Date:	Tuesday, October 23, 2018	Page Num: 11
Modify Date:	Tuesday, April 30, 2019	Page Total: 21

WIFI/BT MODULE

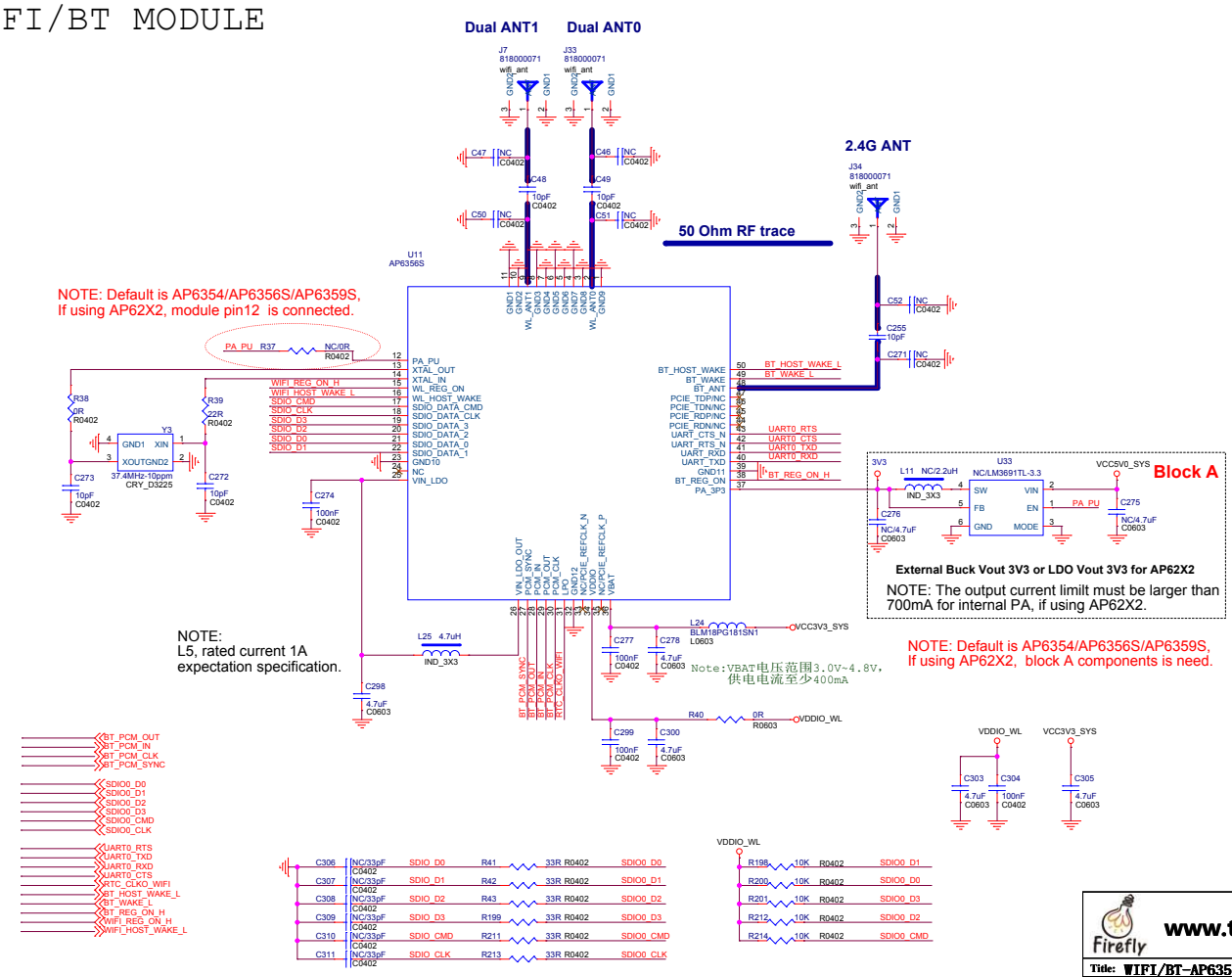

Title:	WIFI/BT-AP6356S
File:	MB-JD4-RK3399&3399PRO
REV:	V0.0
Create Date:	Wednesday, January 02, 2019
Page Num:	12
Modify Date:	Tuesday, April 30, 2019
Page Total:	21

www.t-firefly.com

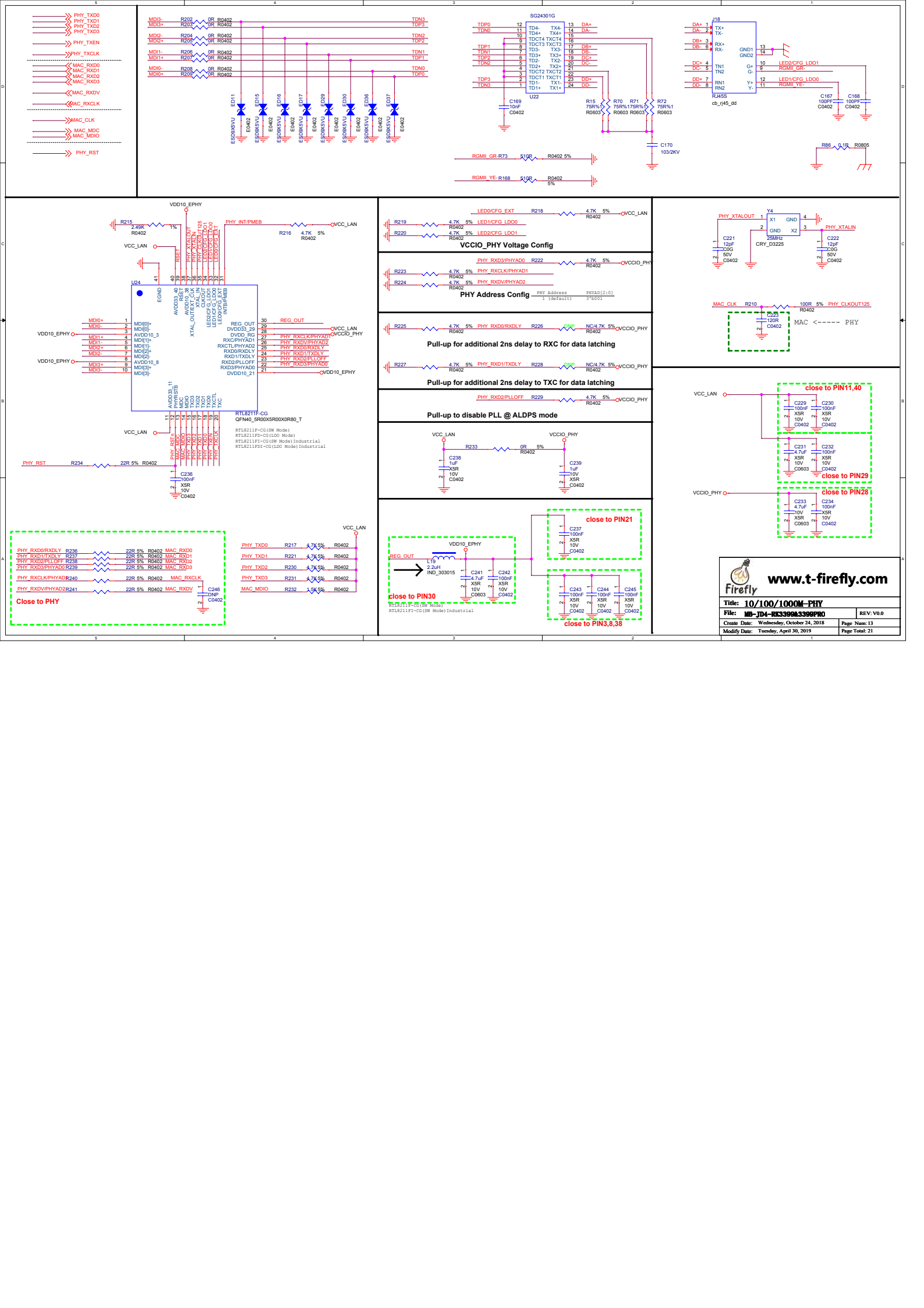
PHY_TXD0
PHY_TXD1
PHY_TXD2
PHY_TXD3
PHY_TXEN
PHY_TXCLK
MAC_RXD0
MAC_RXD1
MAC_RXD2
MAC_RXD3
MAC_RXDV
MAC_RXCLK
MAC_CLK
MAC_MDC
MAC_MDIO
PHY_RST
MDI3-
MDI3+
MDI2-
MDI2+
MDI1-
MDI1+
MDI0-
MDI0+
TDN3
TDP3
TDN2
TDP2
TDN1
TDP1
TDN0
TDP0
SG24301G
U22
J18
RJ45S
cb_rj45_dd
VDD10_EPHY
VCC_LAN
VCCIO_PHY
U24
RTL8211F-CG
QFN40_5R00X5R00X0R80_T
RTL8211F-CG(SW Mode)
RTL8211FD-CG(LDO Mode)
RTL8211FI-CG(SW Mode)Industrial
RTL8211FDI-CG(LDO Mode)Industrial
VCCIO_PHY Voltage Config
PHY Address Config
Pull-up for additional 2ns delay to RXC for data latching
Pull-up for additional 2ns delay to TXC for data latching
Pull-up to disable PLL @ ALDPS mode
MAC <----- PHY
close to PIN11,40
close to PIN29
close to PIN28
close to PIN21
close to PIN30
close to PIN3,8,38
Close to PHY
www.t-firefly.com
Title: 10/100/1000M-PHY
File: MB-JD4-RK3399&3399PRO
REV: V0.0
Create Date: Wednesday, October 24, 2018
Modify Date: Tuesday, April 30, 2019
Page Num: 13
Page Total: 21

MIPI CAMERA 0

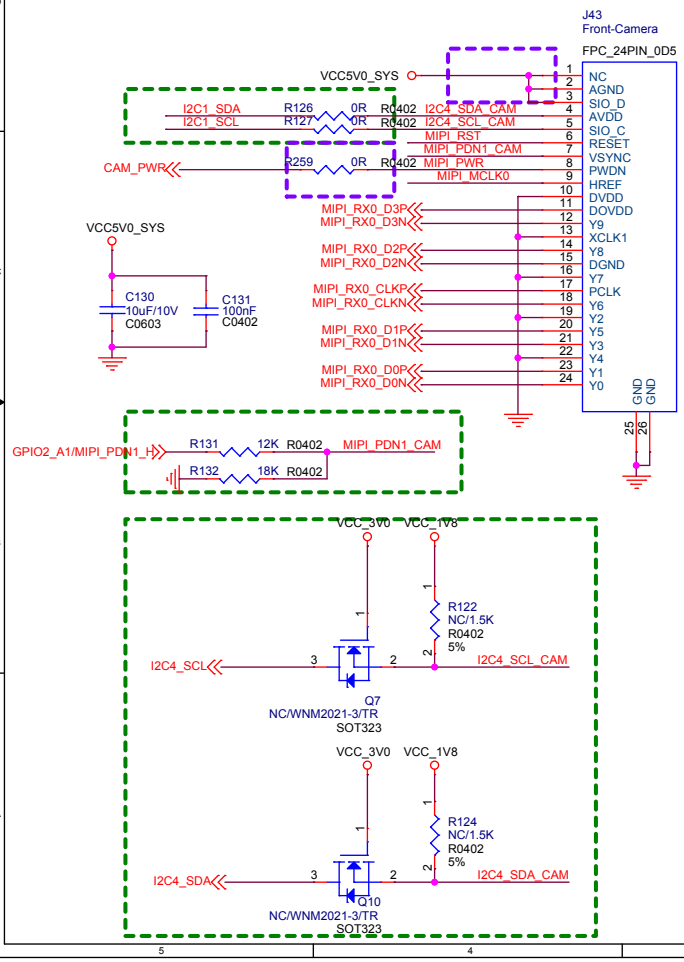

MIPI CAMERA 1

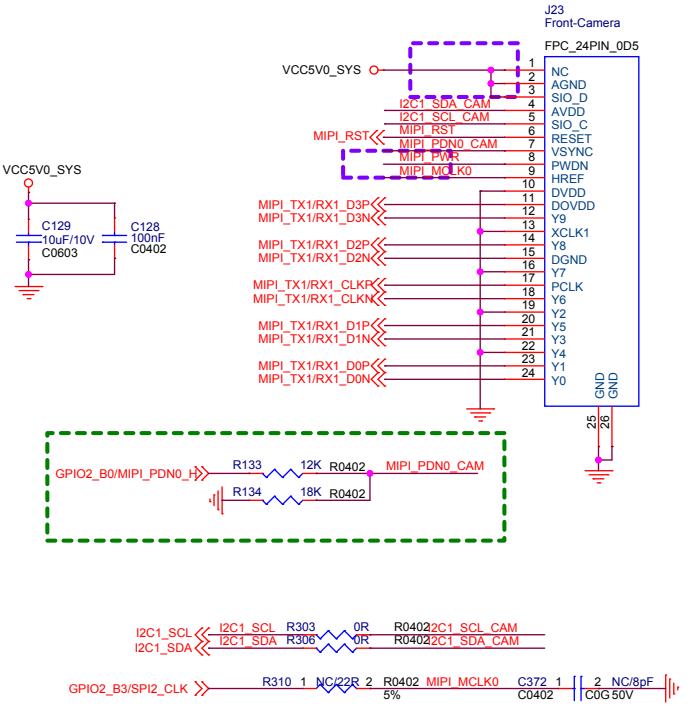

Firefly www.t-firefly.com

Title:	MIPI Interface	
File:	MB-JD4-RK3399&3399PRO	REV: V0.0
Create Date:	Thursday, January 03, 2019	Page Num: 14
Modify Date:	Tuesday, April 30, 2019	Page Total: 21

EDP Display Interface

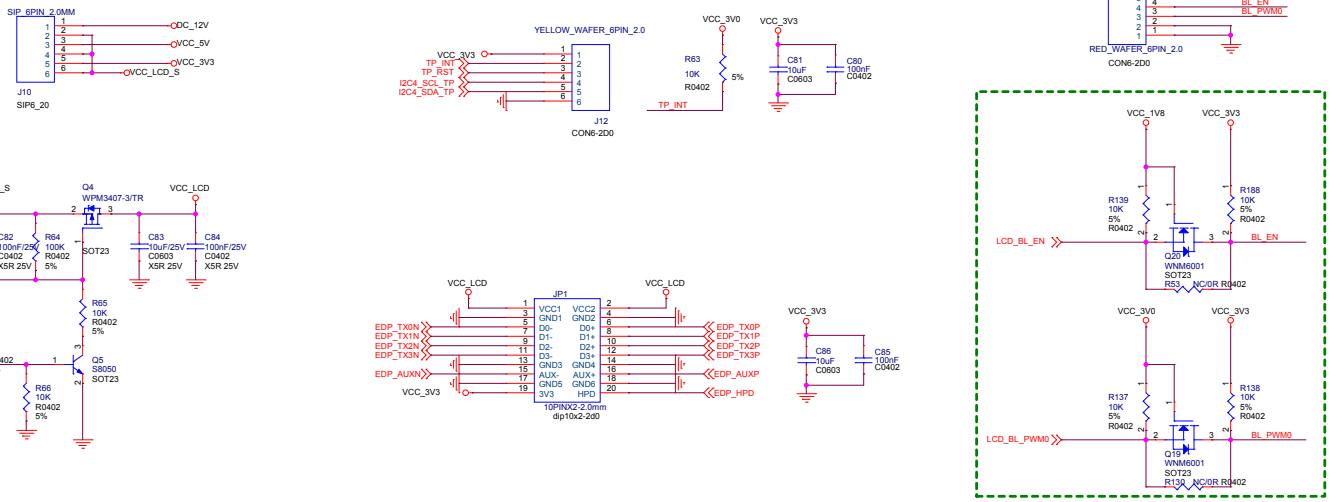

MIPI_PANEL

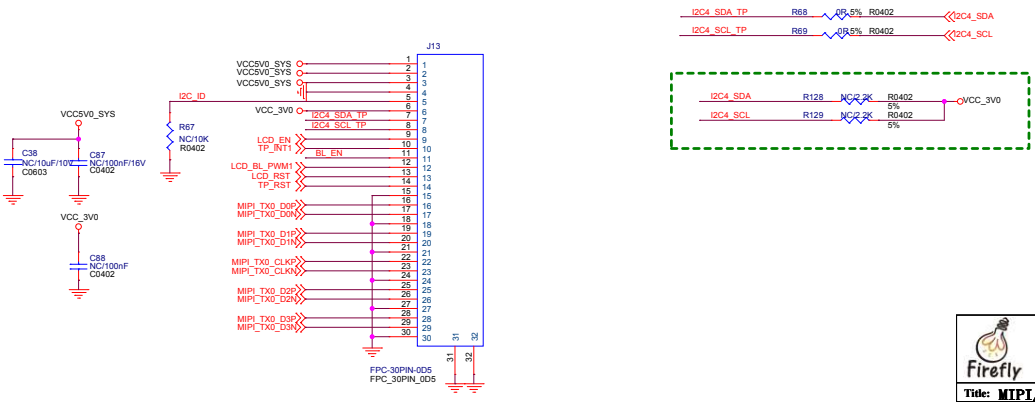

www.t-firefly.com

Title:	MIPI/EDP Dsiplay Port	
File:	MB-JD4-RK3399&3399PRO	REV: V0.0
Create Date:	Friday, October 19, 2018	Page Num: 15
Modify Date:	Tuesday, April 30, 2019	Page Total: 21

MIPI Panel

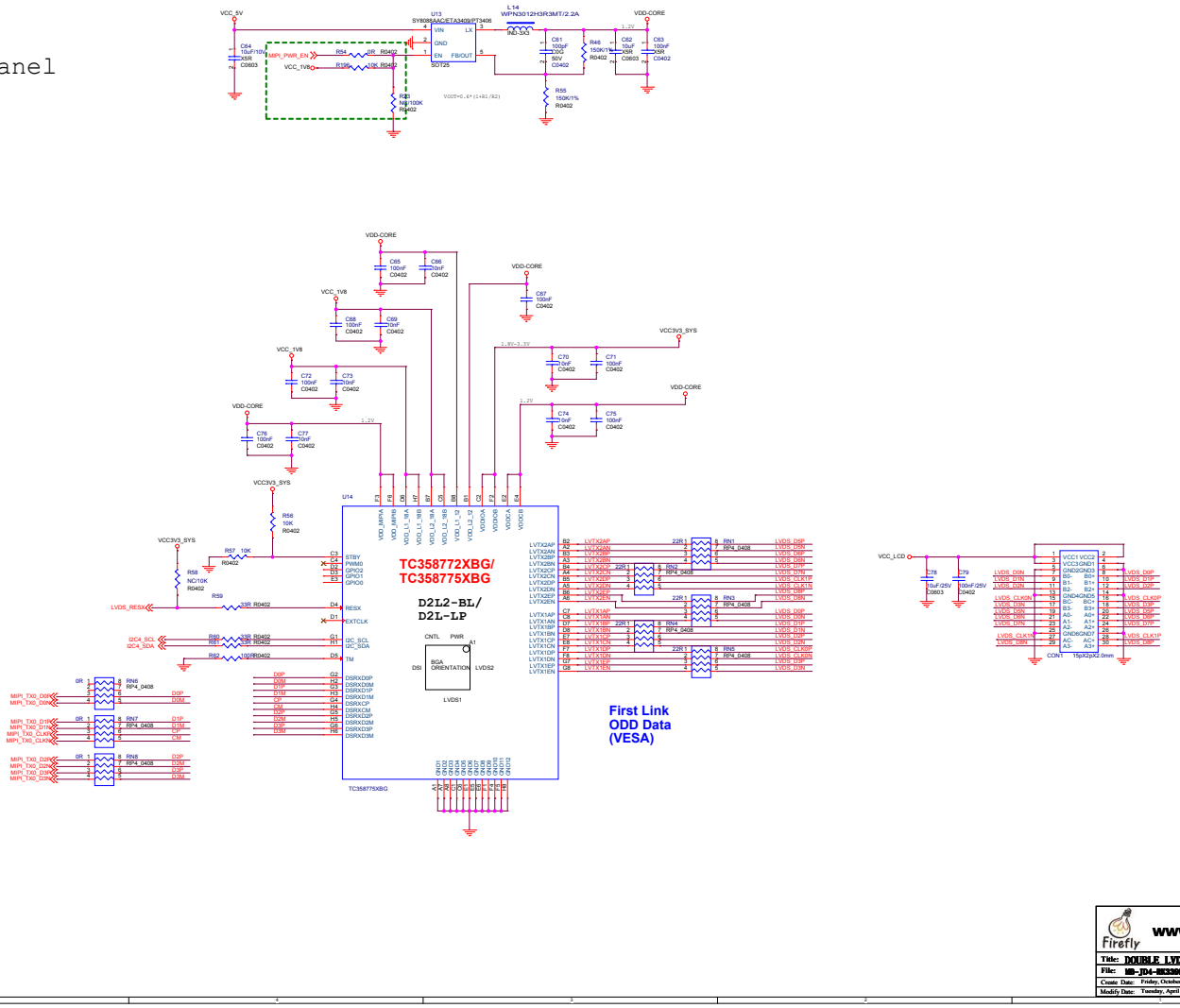

www.t-firefly.com

Title: DOUBLE LVDS	
File: HB-JD4-8E3399A3399PRO	REV: V0.0
Create Date: Friday, October 19, 2018	Page Num: 16
Modify Date: Tuesday, April 30, 2019	Page Total: 21

LVDS MAIN HEADER

(VESA Naming Convention for ODD/EVEN)

I2S/GPIO

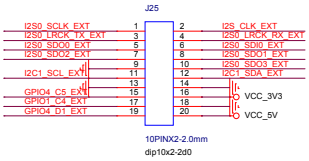

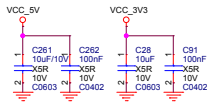

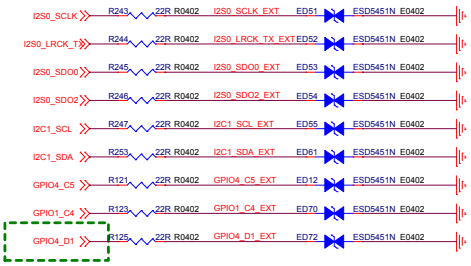

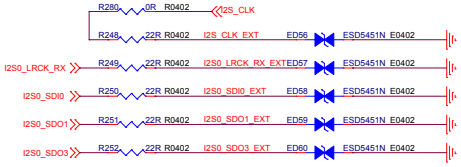

POWER OUT

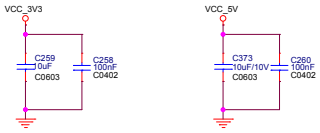

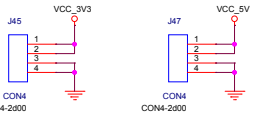

I2C4

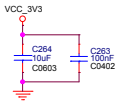

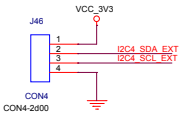

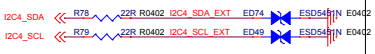

SPI/GPIO

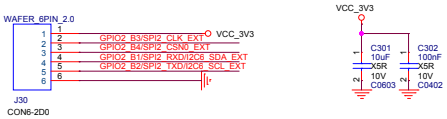

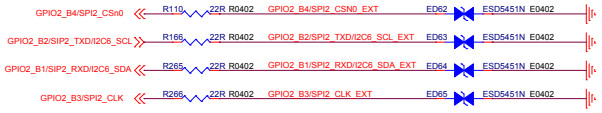

Firefly www.t-firefly.com

Title:	Extension Interface	
File:	MB-JD4-RK3399&3399PRO	REV: V0.0
Create Date:	Tuesday, October 23, 2018	Page Num: 17
Modify Date:	Tuesday, April 30, 2019	Page Total: 21

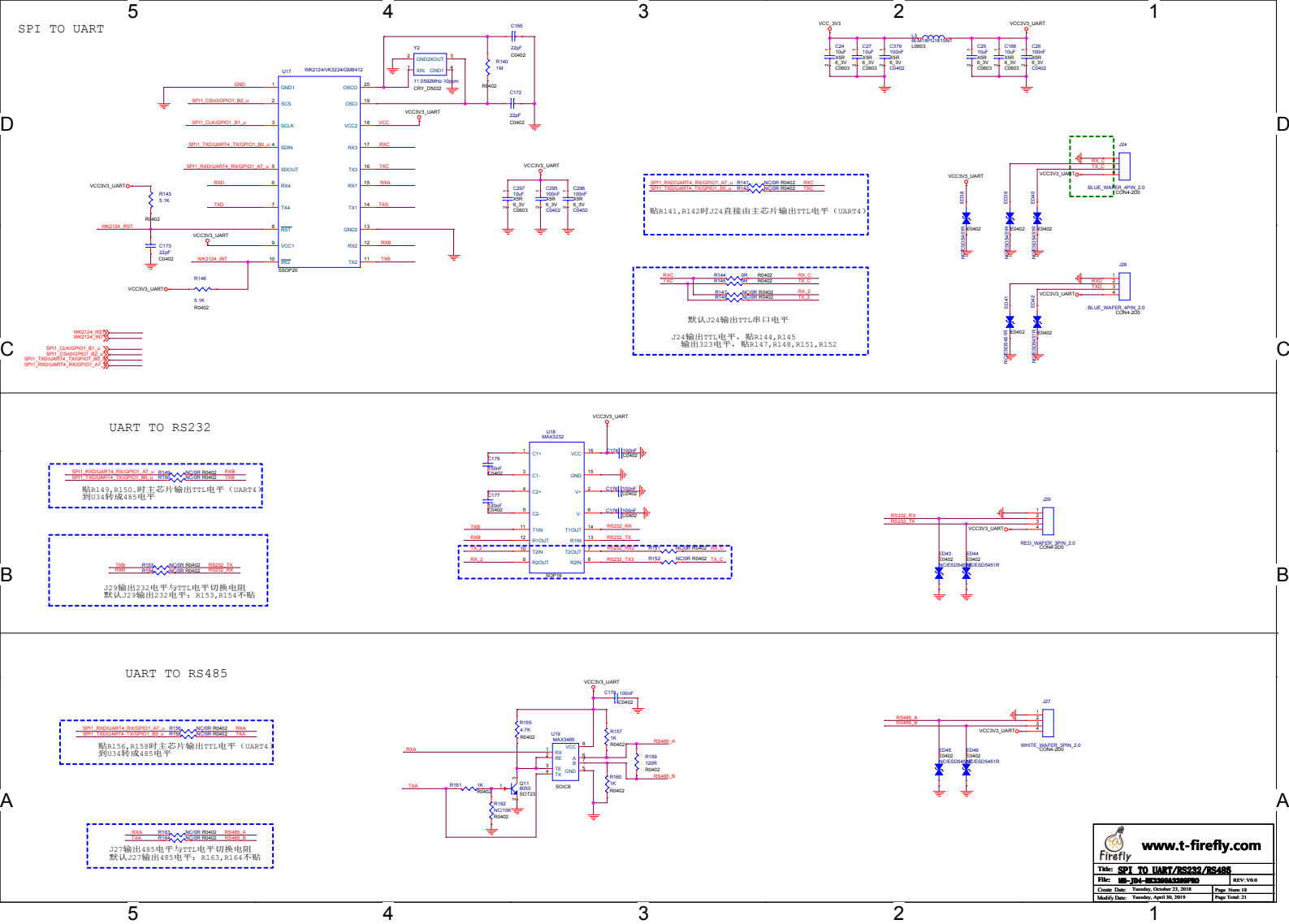

www.t-firefly.com

Title: SPI TO UART/RS232/RS485	
File: MB-JD4-RK3399A3399PRO	REV: V0.0
Create Date: Tuesday, October 23, 2018	Page Num: 18
Modify Date: Tuesday, April 30, 2019	Page Total: 21

www.t-firefly.com

Title: MXM Connector	
File: MB-JD4-8833000A3300PRO	REV: V0.0
Create Date: Thursday, October 18, 2018	Page Num: 19
Modify Date: Tuesday, April 30, 2019	Page Total: 21

MINI PCIE-3G/4G

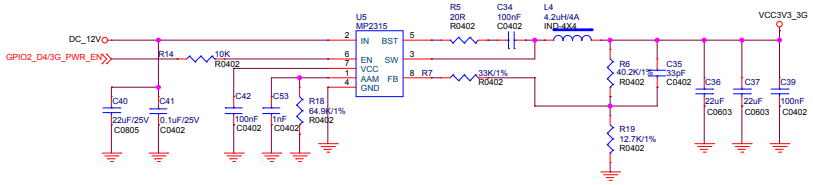

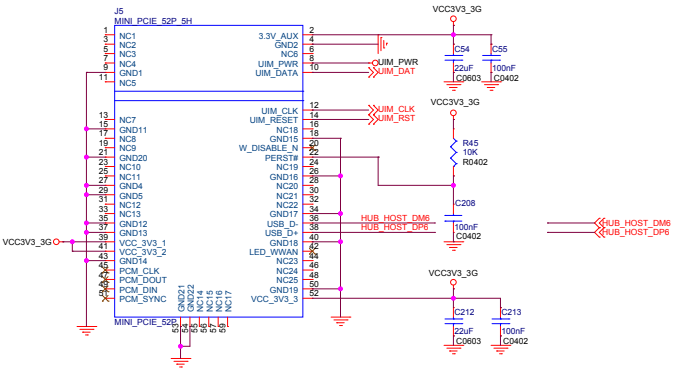

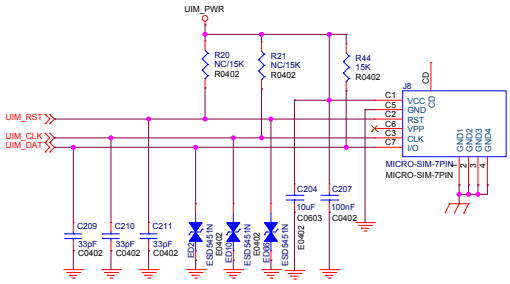

www.t-firefly.com

Title:	3G-4G-MODULE	
File:	MB-JD4-RK3399&3399PRO	REV: V0.0
Create Date:	Monday, December 24, 2018	Page Num: 20
Modify Date:	Tuesday, April 30, 2019	Page Total: 21

Amplifier

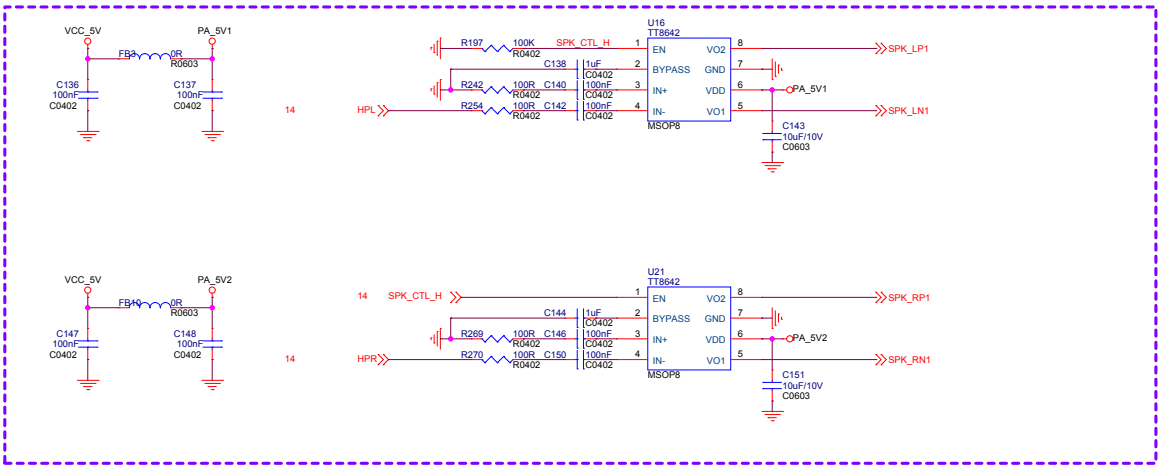

Watch dog

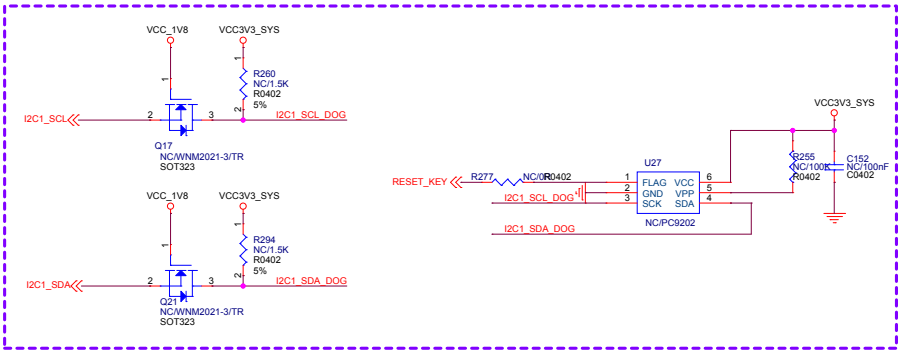

www.t-firefly.com

Title:	Amplifier/Watch dog	
File:	MB_JD4_RK3399&3399PRO	REV: <Revcode>
Create Date:	Thursday, April 18, 2019	Page Num:21
Modify Date:	Tuesday, April 30, 2019	Page Total: 21