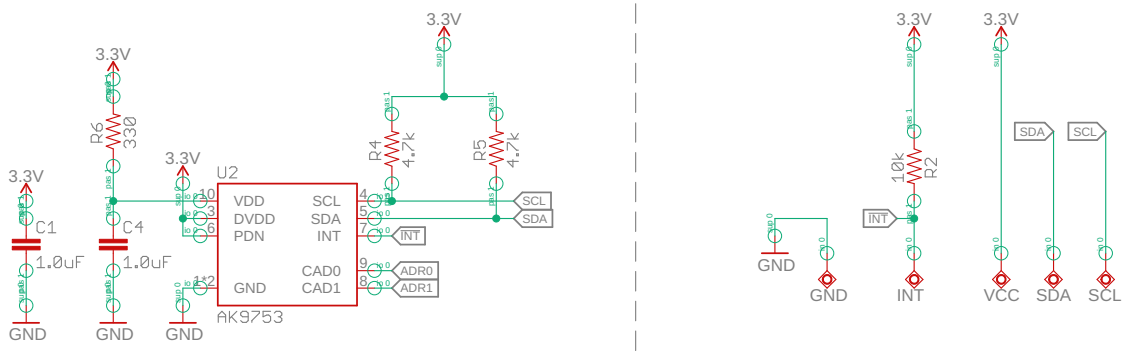

Design By Louise Lessel, 2020
Based on SparkFun Breakout board
https://www.sparkfun.com/products/14349

TITLE: AK9753 Human Movement Sensor

Document Number:

REV:

Date: 4/24/20 2:10 PM

Sheet: 1/1