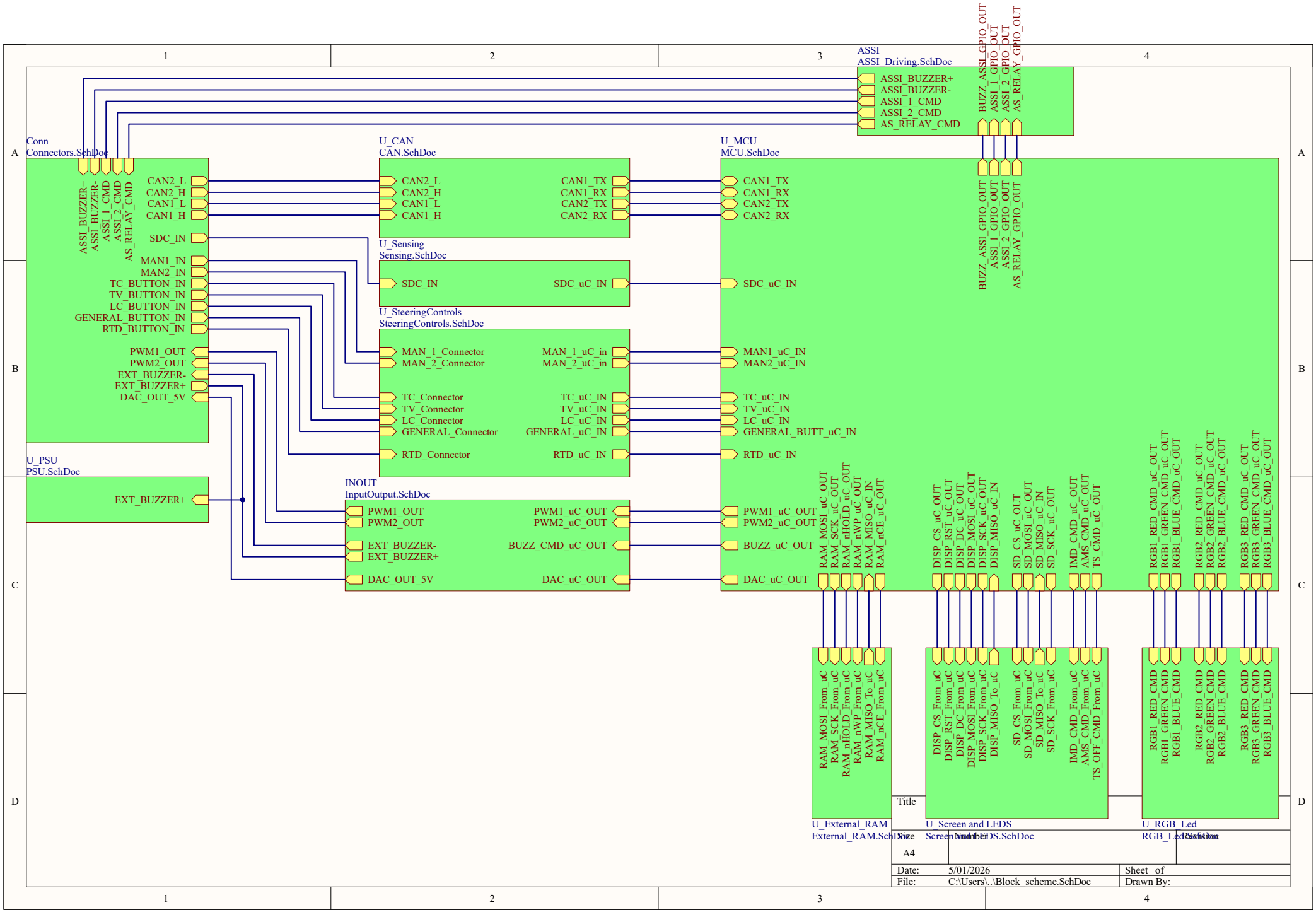
ASSI
ASSI_Driving.SchDoc
ASSI_BUZZER+
ASSI_BUZZER-
ASSI_1_CMD
ASSI_2_CMD
AS_RELAY_CMD
BUZZ_ASSI_GPIO_OUT
ASSI_1_GPIO_OUT
ASSI_2_GPIO_OUT
AS_RELAY_GPIO_OUT
Conn
Connectors.SchDoc
CAN2_L
CAN2_H
CAN1_L
CAN1_H
SDC_IN
MAN1_IN
MAN2_IN
TC_BUTTON_IN
TV_BUTTON_IN
LC_BUTTON_IN
GENERAL_BUTTON_IN
RTD_BUTTON_IN
PWM1_OUT
PWM2_OUT
EXT_BUZZER-
EXT_BUZZER+
DAC_OUT_5V
U_CAN
CAN.SchDoc
CAN1_TX
CAN1_RX
CAN2_TX
CAN2_RX
U_Sensing
Sensing.SchDoc
SDC_uC_IN
U_SteeringControls
SteeringControls.SchDoc
MAN_1_Connector
MAN_2_Connector
MAN_1_uC_in
MAN_2_uC_in
TC_Connector
TV_Connector
LC_Connector
GENERAL_Connector
RTD_Connector
TC_uC_IN
TV_uC_IN
LC_uC_IN
GENERAL_uC_IN
RTD_uC_IN
U_PSU
PSU.SchDoc
INOUT
InputOutput.SchDoc
BUZZ_CMD_uC_OUT
DAC_uC_OUT
U_MCU
MCU.SchDoc
MAN1_uC_IN
MAN2_uC_IN
GENERAL_BUTT_uC_IN
BUZZ_uC_OUT
RAM_MOSI_uC_OUT
RAM_SCK_uC_OUT
RAM_nHOLD_uC_OUT
RAM_nWP_uC_OUT
RAM_MISO_uC_IN
RAM_nCE_uC_OUT
DISP_CS_uC_OUT
DISP_RST_uC_OUT
DISP_DC_uC_OUT
DISP_MOSI_uC_OUT
DISP_SCK_uC_OUT
DISP_MISO_uC_IN
SD_CS_uC_OUT
SD_MOSI_uC_OUT
SD_MISO_uC_IN
SD_SCK_uC_OUT
IMD_CMD_uC_OUT
AMS_CMD_uC_OUT
TS_CMD_uC_OUT
RGB1_RED_CMD_uC_OUT
RGB1_GREEN_CMD_uC_OUT
RGB1_BLUE_CMD_uC_OUT
RGB2_RED_CMD_uC_OUT
RGB2_GREEN_CMD_uC_OUT
RGB2_BLUE_CMD_uC_OUT
RGB3_RED_CMD_uC_OUT
RGB3_GREEN_CMD_uC_OUT
RGB3_BLUE_CMD_uC_OUT
RAM_MOSI_From_uC
RAM_SCK_From_uC
RAM_nHOLD_From_uC
RAM_nWP_From_uC
RAM_MISO_To_uC
RAM_nCE_From_uC
DISP_CS_From_uC
DISP_RST_From_uC
DISP_DC_From_uC
DISP_MOSI_From_uC
DISP_SCK_From_uC
DISP_MISO_To_uC
SD_CS_From_uC
SD_MOSI_From_uC
SD_MISO_To_uC
SD_SCK_From_uC
IMD_CMD_From_uC
AMS_CMD_From_uC
TS_OFF_CMD_From_uC
RGB1_RED_CMD
RGB1_GREEN_CMD
RGB1_BLUE_CMD
RGB2_RED_CMD
RGB2_GREEN_CMD
RGB2_BLUE_CMD
RGB3_RED_CMD
RGB3_GREEN_CMD
RGB3_BLUE_CMD
U_External_RAM
External_RAM.SchDoc
U_Screen and LEDS
Screen and LEDS.SchDoc
U_RGB_Led
RGB_Led.SchDoc
Title
Size
A4
Number
Revision
Date: 5/01/2026
File: C:\Users\..\Block_scheme.SchDoc
Sheet of
Drawn By:

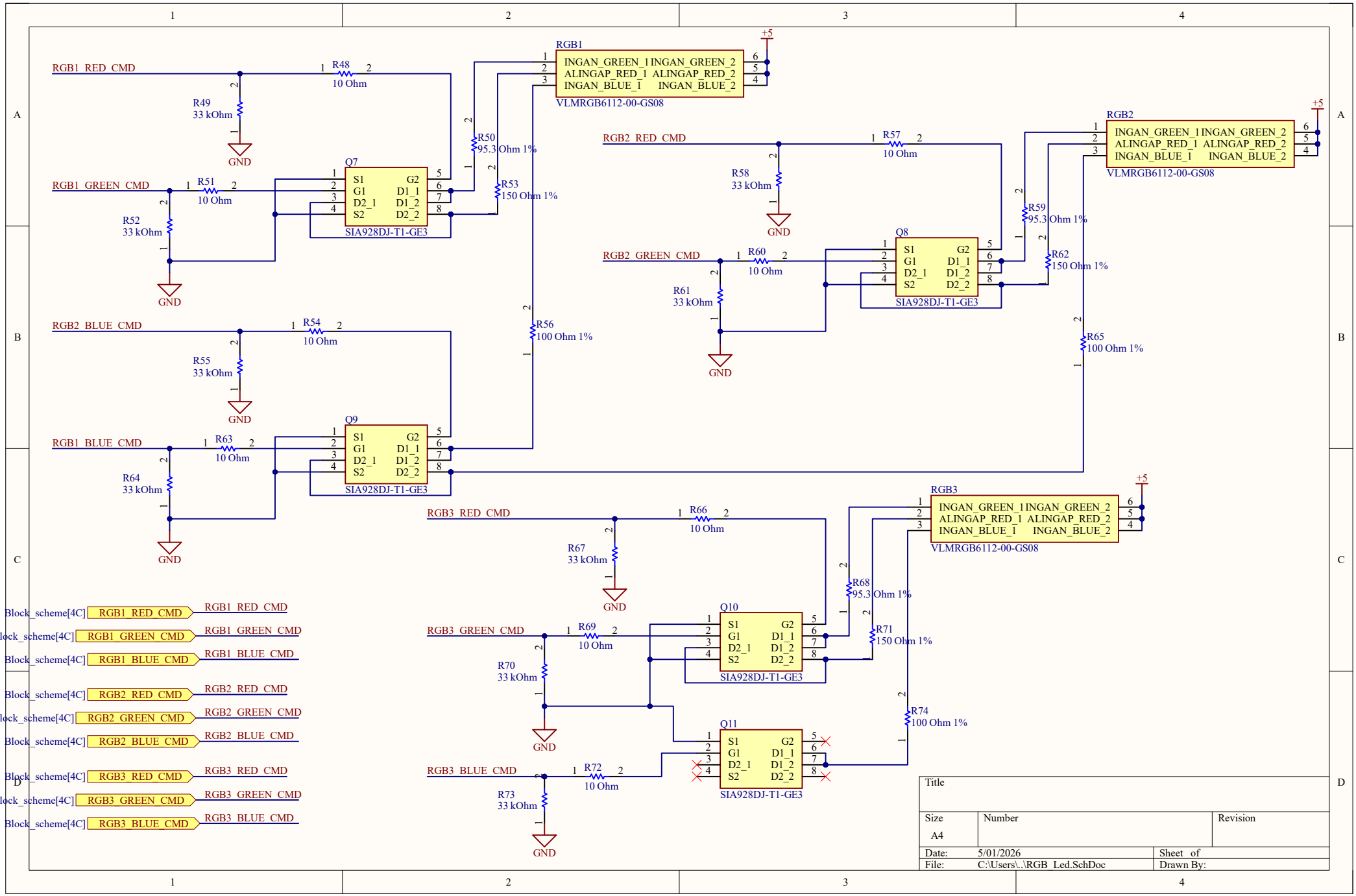
RGB1_RED_CMD
R48
10 Ohm
R49
33 kOhm
GND
RGB1_GREEN_CMD
R51
10 Ohm
R52
33 kOhm
Q7
S1 G2
G1 D1_1
D2_1 D1_2
S2 D2_2
SIA928DJ-T1-GE3
R50
95.3 Ohm 1%
R53
150 Ohm 1%
RGB1
INGAN_GREEN_1 INGAN_GREEN_2
ALINGAP_RED_1 ALINGAP_RED_2
INGAN_BLUE_1 INGAN_BLUE_2
VLMRGB6112-00-GS08
+5
RGB2_RED_CMD
R57
10 Ohm
R58
33 kOhm
RGB2
RGB2_GREEN_CMD
R60
10 Ohm
R61
33 kOhm
Q8
R59
95.3 Ohm 1%
R62
150 Ohm 1%
RGB2_BLUE_CMD
R54
10 Ohm
R55
33 kOhm
R56
100 Ohm 1%
R65
100 Ohm 1%
RGB1_BLUE_CMD
R63
10 Ohm
R64
33 kOhm
Q9
RGB3_RED_CMD
R66
10 Ohm
R67
33 kOhm
RGB3
RGB3_GREEN_CMD
R69
10 Ohm
R70
33 kOhm
Q10
R68
95.3 Ohm 1%
R71
150 Ohm 1%
R74
100 Ohm 1%
RGB3_BLUE_CMD
R72
10 Ohm
R73
33 kOhm
Q11
Block_scheme[4C]
RGB1_RED_CMD
RGB1_GREEN_CMD
RGB1_BLUE_CMD
RGB2_RED_CMD
RGB2_GREEN_CMD
RGB2_BLUE_CMD
RGB3_RED_CMD
RGB3_GREEN_CMD
RGB3_BLUE_CMD
Title
Size
A4
Number
Revision
Date: 5/01/2026
File: C:\Users\..\RGB_Led.SchDoc
Sheet of
Drawn By:

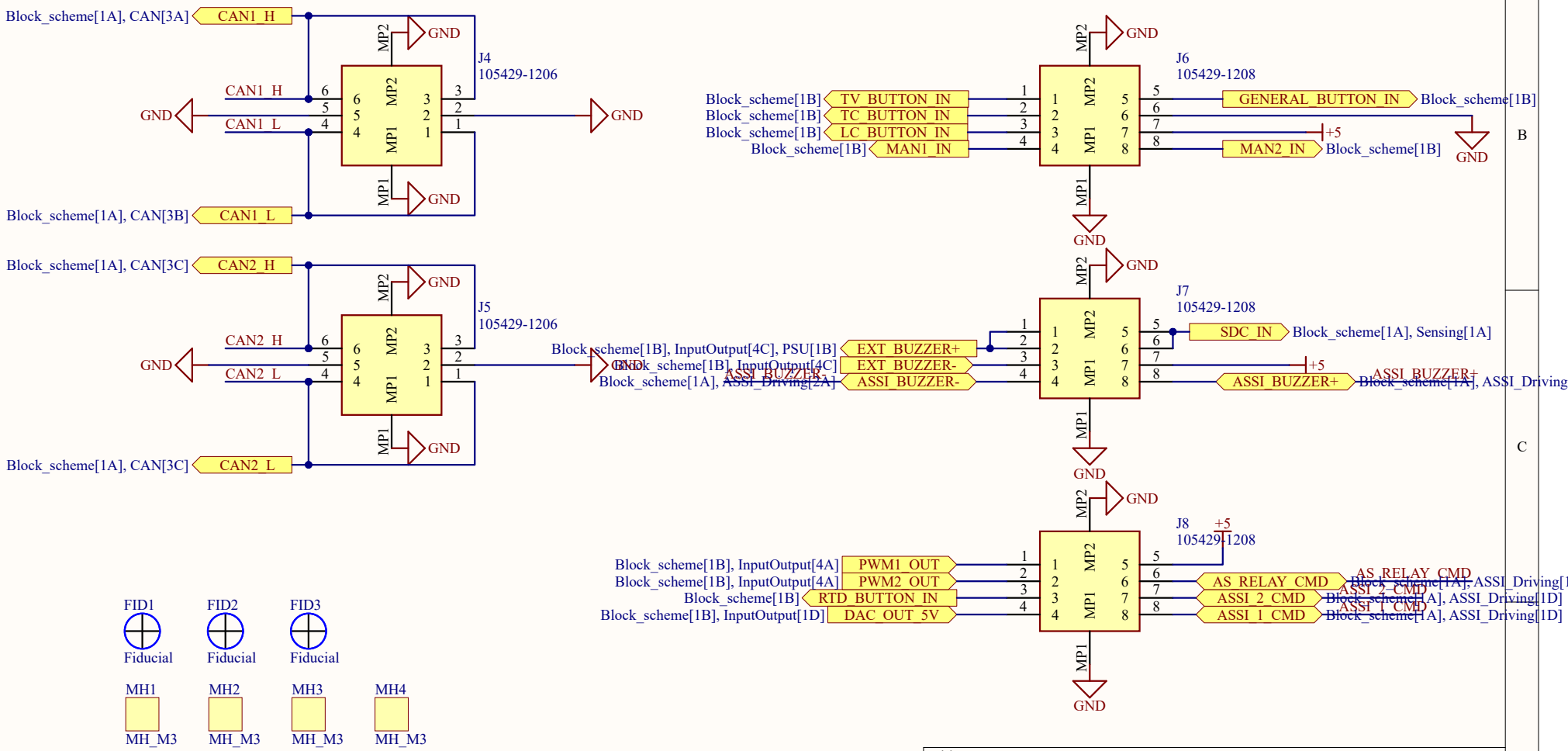

Title		
Size A	Number	Revision
Date: 5/01/2026		Sheet of
File: C:\Users\..\Connectors.SchDoc		Drawn By:

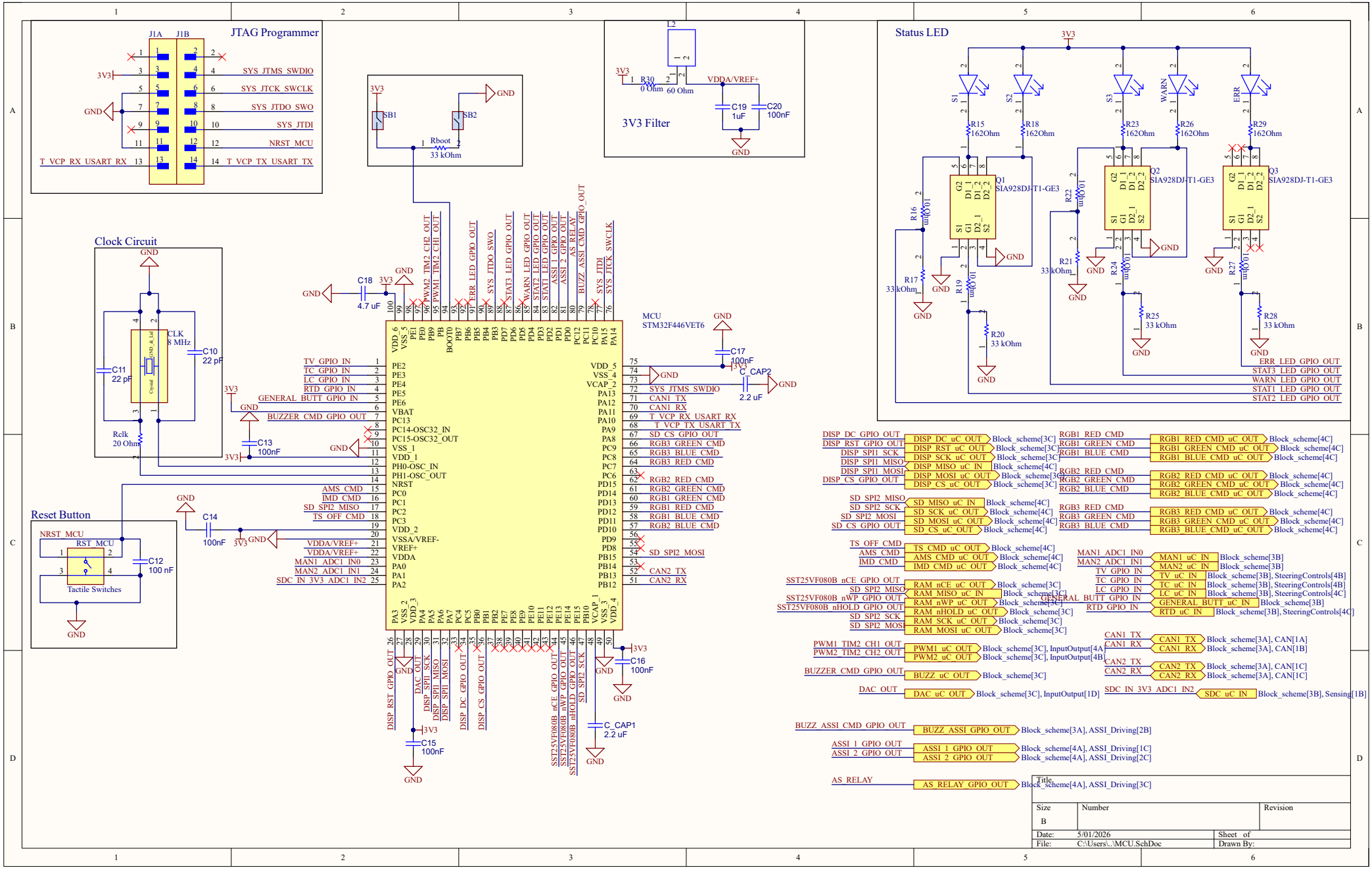
JTAG Programmer
J1A
J1B
3V3
GND
SYS_JTMS_SWDIO
SYS_JTCK_SWCLK
SYS_JTDO_SWO
SYS_JTDI
NRST_MCU
T_VCP_RX_USART_RX
T_VCP_TX_USART_TX
SB1
SB2
Rboot
33 kOhm
L2
R30
0 Ohm
60 Ohm
VDDA/VREF+
C19
1uF
C20
100nF
3V3 Filter
Status LED
S1
S2
S3
WARN
ERR
R15
162Ohm
R18
162Ohm
R23
162Ohm
R26
162Ohm
R29
162Ohm
Q1
SIA928DJ-T1-GE3
Q2
SIA928DJ-T1-GE3
Q3
SIA928DJ-T1-GE3
R16
100Ohm
R17
33 kOhm
R19
100Ohm
R20
33 kOhm
R22
100Ohm
R21
33 kOhm
R24
100Ohm
R25
33 kOhm
R27
100Ohm
R28
33 kOhm
ERR_LED_GPIO_OUT
STAT3_LED_GPIO_OUT
WARN_LED_GPIO_OUT
STAT1_LED_GPIO_OUT
STAT2_LED_GPIO_OUT
Clock Circuit
CLK
8 MHz
C10
22 pF
C11
22 pF
Rclk
20 Ohm
C18
4.7 uF
C13
100nF
Reset Button
NRST_MCU
RST_MCU
C12
100 nF
Tactile Switches
C14
100nF
MCU
STM32F446VET6
C17
100nF
C_CAP2
2.2 uF
C16
100nF
C_CAP1
2.2 uF
C15
100nF
TIM2_CH2_OUT
TIM2_CH1_OUT
PWM2
PWM1
ERR_LED_GPIO_OUT
SYS_JTDO_SWO
STAT3_LED_GPIO_OUT
WARN_LED_GPIO_OUT
STAT2_LED_GPIO_OUT
STAT1_LED_GPIO_OUT
ASSI_1_GPIO_OUT
ASSI_2_GPIO_OUT
AS_RELAY
BUZZ_ASSI_CMD_GPIO_OUT
SYS_JTDI
SYS_JTCK_SWCLK
TV_GPIO_IN
TC_GPIO_IN
LC_GPIO_IN
RTD_GPIO_IN
GENERAL_BUTT_GPIO_IN
BUZZER_CMD_GPIO_OUT
AMS_CMD
IMD_CMD
SD_SPI2_MISO
TS_OFF_CMD
VDDA/VREF+
MAN1_ADC1_IN0
MAN2_ADC1_IN1
SDC_IN_3V3_ADC1_IN2
SD_CS_GPIO_OUT
RGB3_GREEN_CMD
RGB3_BLUE_CMD
RGB3_RED_CMD
RGB2_RED_CMD
RGB2_GREEN_CMD
RGB1_GREEN_CMD
RGB1_RED_CMD
RGB1_BLUE_CMD
SD_SPI2_MOSI
CAN2_TX
CAN2_RX
DISP_RST_GPIO_OUT
DAC_OUT
DISP_SPI1_SCK
DISP_SPI1_MISO
DISP_SPI1_MOSI
DISP_DC_GPIO_OUT
DISP_CS_GPIO_OUT
SST25VF080B_nCE_GPIO_OUT
SST25VF080B_nWP_GPIO_OUT
SST25VF080B_nHOLD_GPIO_OUT
SD_SPI2_SCK
Block_scheme[3C], InputOutput[1D]
Block_scheme[3A], ASSI_Driving[2B]
Block_scheme[4A], ASSI_Driving[1C]
Block_scheme[4A], ASSI_Driving[2C]
Block_scheme[4A], ASSI_Driving[3C]
Block_scheme[3B], Sensing[1B]
Block_scheme[3A], CAN[1A]
Block_scheme[3A], CAN[1B]
Block_scheme[3A], CAN[1C]
Block_scheme[3B], SteeringControls[4B]
Block_scheme[3B], SteeringControls[4C]
Block_scheme[3C], InputOutput[4A]
Block_scheme[3C], InputOutput[4B]
Block_scheme[4A], ASSI_Driving[1C]
Block_scheme[4A], ASSI_Driving[2C]
Title
Size
B
Number
Revision
Date:
5/01/2026
Sheet of
File:
C:\Users\..\MCU.SchDoc
Drawn By:

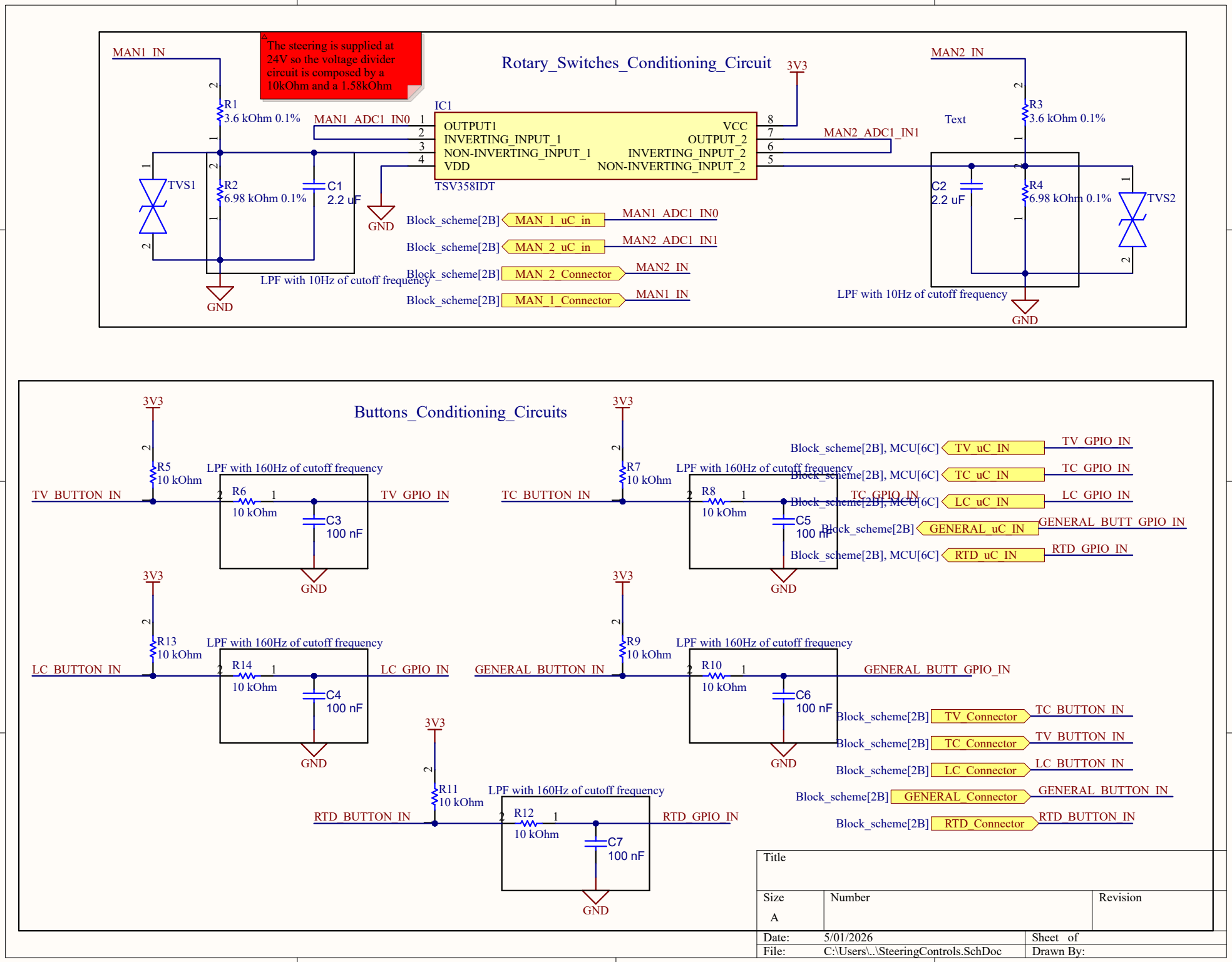
Rotary_Switches_Conditioning_Circuit
The steering is supplied at 24V so the voltage divider circuit is composed by a 10kOhm and a 1.58kOhm
MAN1_IN
R1
3.6 kOhm 0.1%
MAN1_ADC1_IN0
IC1
OUTPUT1
INVERTING_INPUT_1
NON-INVERTING_INPUT_1
VDD
VCC
OUTPUT_2
INVERTING_INPUT_2
NON-INVERTING_INPUT_2
TSV358IDT
3V3
MAN2_ADC1_IN1
MAN2_IN
R3
3.6 kOhm 0.1%
Text
TVS1
R2
6.98 kOhm 0.1%
C1
2.2 uF
GND
LPF with 10Hz of cutoff frequency
Block_scheme[2B]
MAN_1_uC_in
MAN1_ADC1_IN0
MAN_2_uC_in
MAN2_ADC1_IN1
MAN_2_Connector
MAN2_IN
MAN_1_Connector
MAN1_IN
C2
2.2 uF
R4
6.98 kOhm 0.1%
TVS2
Buttons_Conditioning_Circuits
3V3
R5
10 kOhm
LPF with 160Hz of cutoff frequency
TV_BUTTON_IN
R6
10 kOhm
C3
100 nF
TV_GPIO_IN
R7
10 kOhm
TC_BUTTON_IN
R8
10 kOhm
C5
100 nF
TC_GPIO_IN
Block_scheme[2B], MCU[6C]
TV_uC_IN
TV_GPIO_IN
TC_uC_IN
TC_GPIO_IN
LC_uC_IN
LC_GPIO_IN
GENERAL_uC_IN
GENERAL_BUTT_GPIO_IN
RTD_uC_IN
RTD_GPIO_IN
R13
10 kOhm
LC_BUTTON_IN
R14
10 kOhm
C4
100 nF
LC_GPIO_IN
R9
10 kOhm
GENERAL_BUTTON_IN
R10
10 kOhm
C6
100 nF
GENERAL_BUTT_GPIO_IN
TV_Connector
TC_BUTTON_IN
TC_Connector
TV_BUTTON_IN
LC_Connector
LC_BUTTON_IN
GENERAL_Connector
GENERAL_BUTTON_IN
RTD_Connector
RTD_BUTTON_IN
R11
10 kOhm
RTD_BUTTON_IN
R12
10 kOhm
C7
100 nF
RTD_GPIO_IN
Title
Size
A
Number
Revision
Date:
5/01/2026
Sheet of
File:
C:\Users\..\SteeringControls.SchDoc
Drawn By:

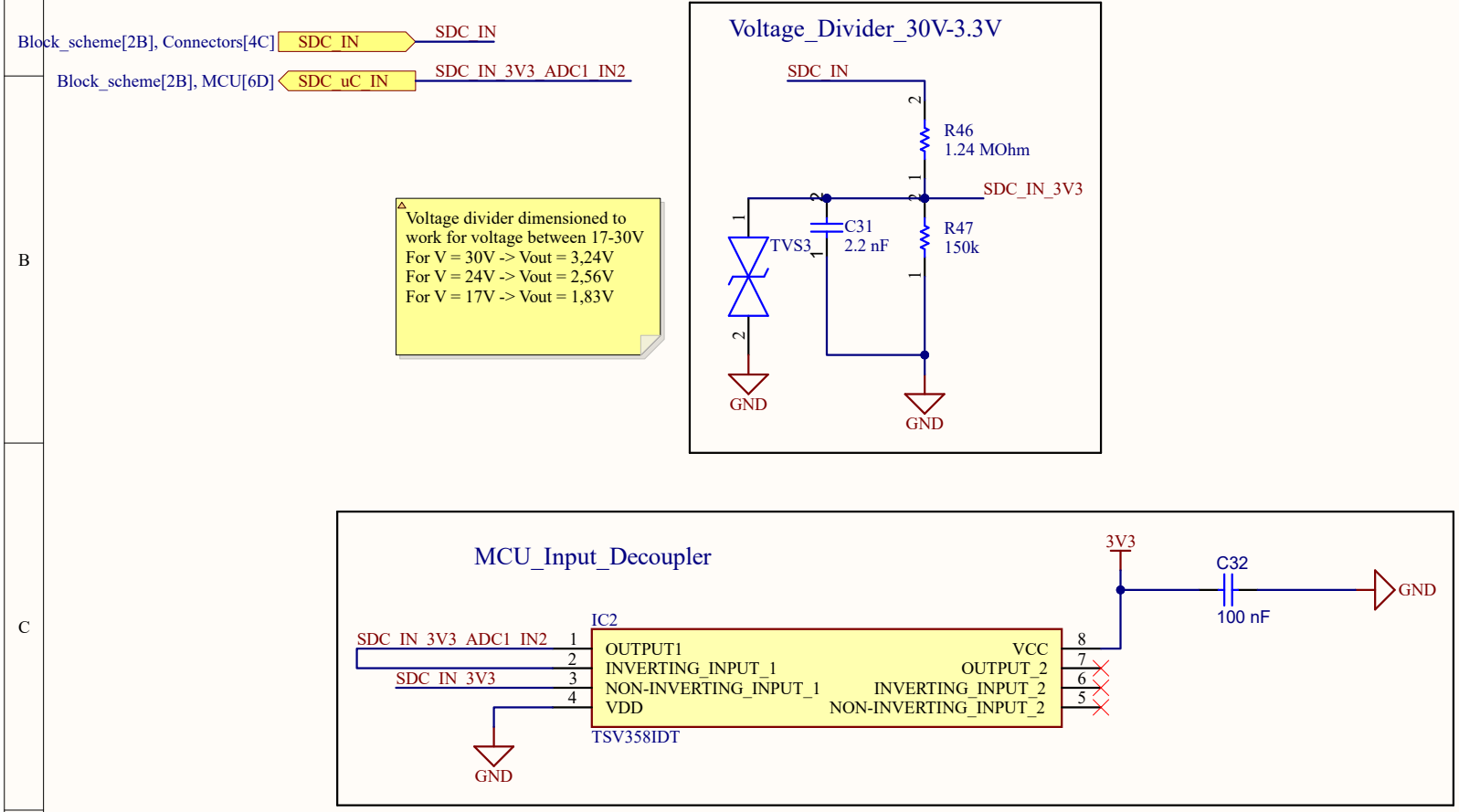

Title		
Size A	Number	Revision
Date: 5/01/2026		Sheet of
File: C:\Users\..\Sensing.SchDoc		Drawn By:

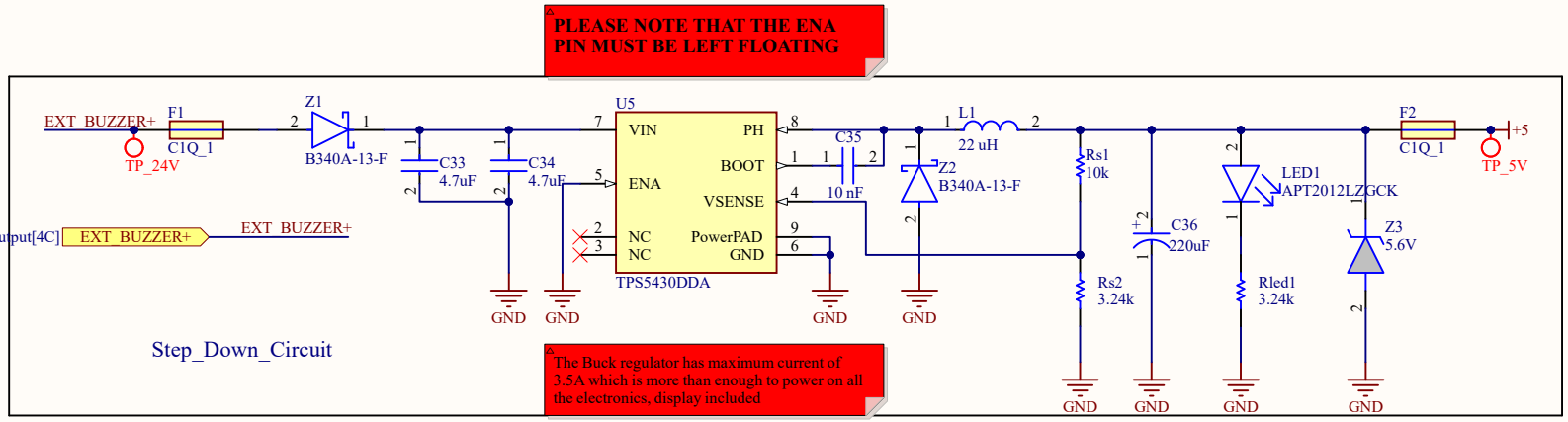

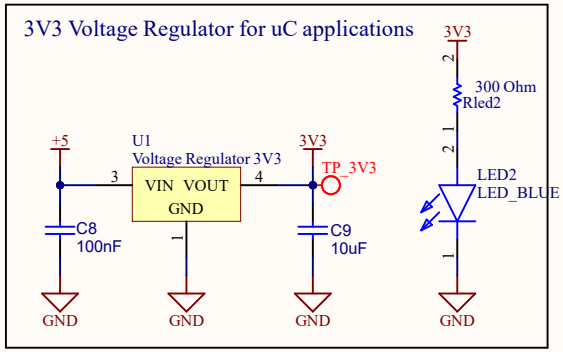

Title		
Size A4	Number	Revision
Date: 5/01/2026		Sheet of
File: C:\Users\..\PSU.SchDoc		Drawn By:

Il uC ha fino a 4 SPI:
SPI1: fino a 45 MB/s
SPI2: fino a 22.5 MB/s
SPI3: fino a 22.5 MB/s
SPI4: fino a 45 MB/s

Tutti gli SPI possono essere sfruttati dal DMA

Sulla nucleo test-schermo usata da Matteo l'SPI usato andava a massimo 21 MB/s, quindi noi possiamo scegliere indifferentemente uno dei 4 SPI

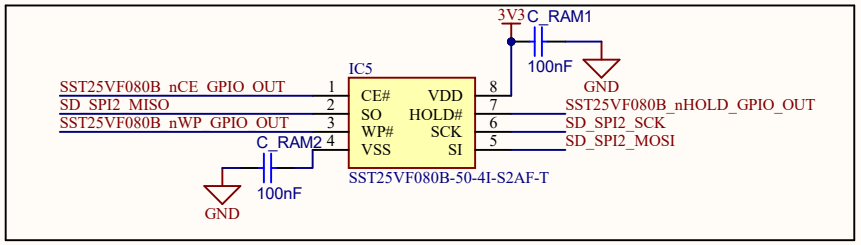

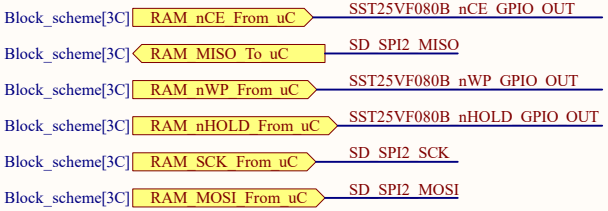

Title		
Size A4	Number	Revision
Date: 5/01/2026		Sheet of
File: C:\Users\..\External_RAM.SchDoc		Drawn By:

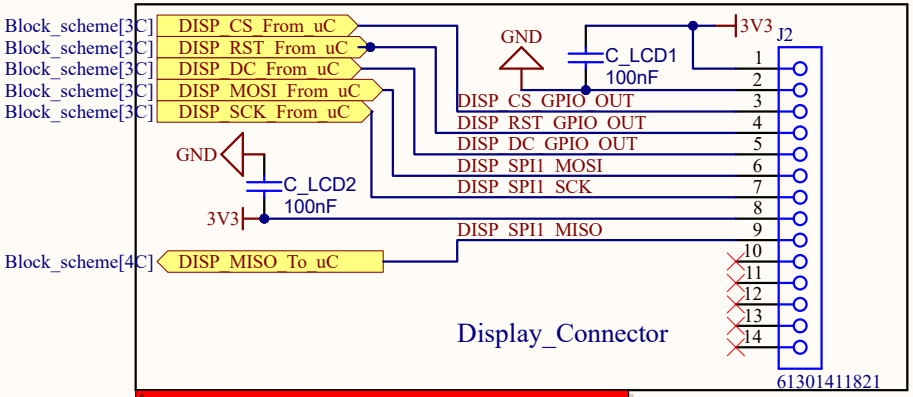

- Pin8 is LED pin that allows a maximum of 3V3 for maximum brightness;

- Maximum power consuption with backlight on is 150 mA;

Reference:
https://docs.cirkitdesigner.com/component/77c977d3-311b-49e5-ae74-2afe02a1a513/lcd-tft-screen-ili9488-hd

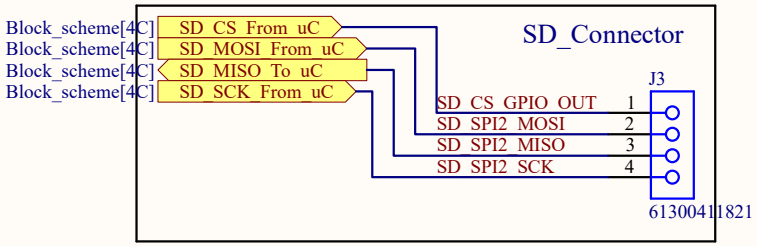

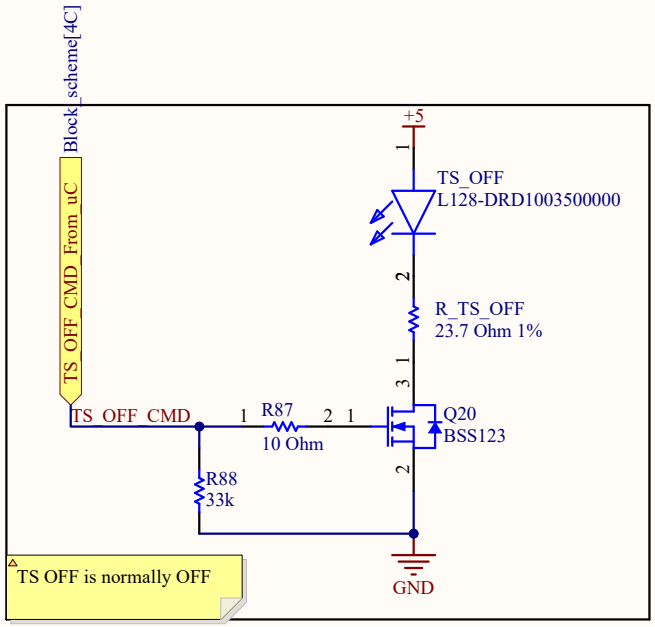

TS OFF is normally OFF

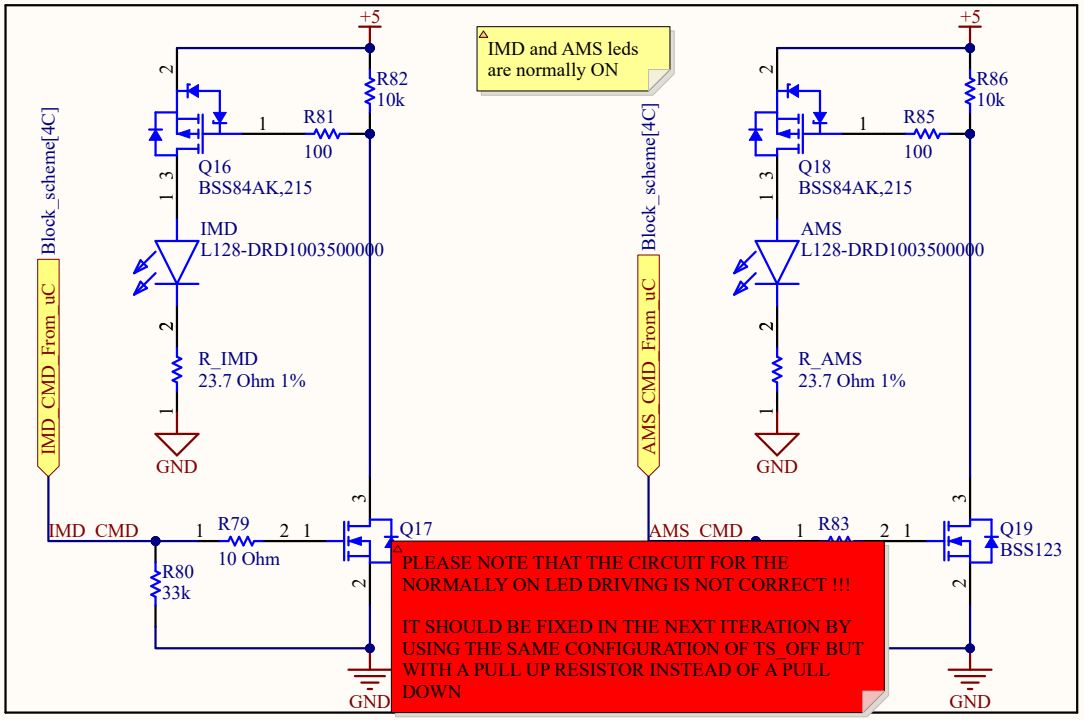

IMD and AMS leds are normally ON

PLEASE NOTE THAT THE CIRCUIT FOR THE NORMALLY ON LED DRIVING IS NOT CORRECT !!!

IT SHOULD BE FIXED IN THE NEXT ITERATION BY USING THE SAME CONFIGURATION OF TS_OFF BUT WITH A PULL UP RESISTOR INSTEAD OF A PULL DOWN

Title		
Size A	Number	Revision
Date: 5/01/2026		Sheet of
File: C:\Users\..\Screen and LEDS.SchDoc		Drawn By:

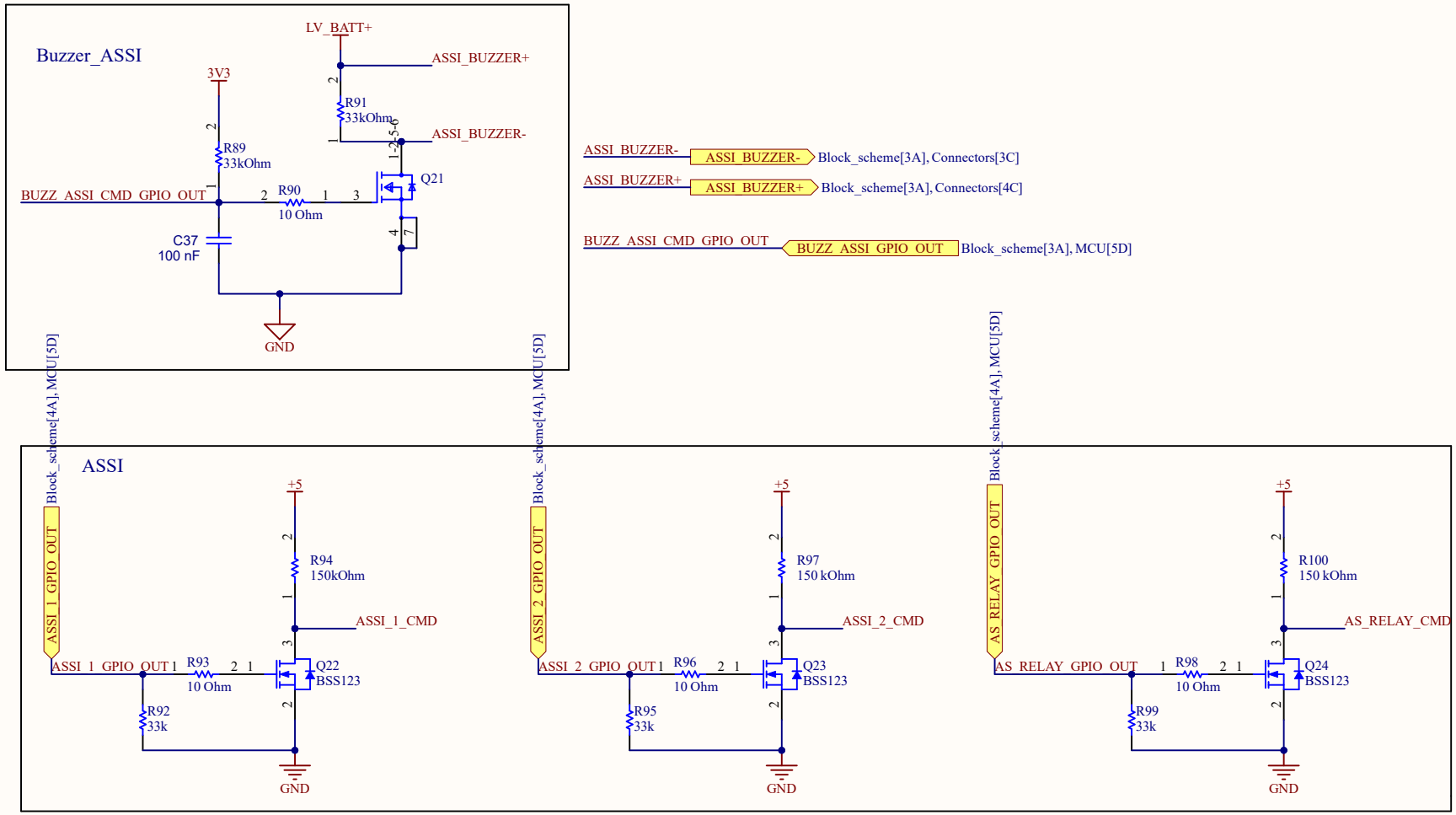

ASSI_1_CMD — ASSI_1_CMD — Block_scheme[3A], Connectors[4D]

ASSI_2_CMD — ASSI_2_CMD — Block_scheme[3A], Connectors[4C]

AS_RELAY_CMD — AS_RELAY_CMD — Block_scheme[3A], Connectors[4C]

Title		
Size A4	Number	Revision
Date: 5/01/2026		Sheet of
File: C:\Users\..\ASSI_Driving.SchDoc		Drawn By:

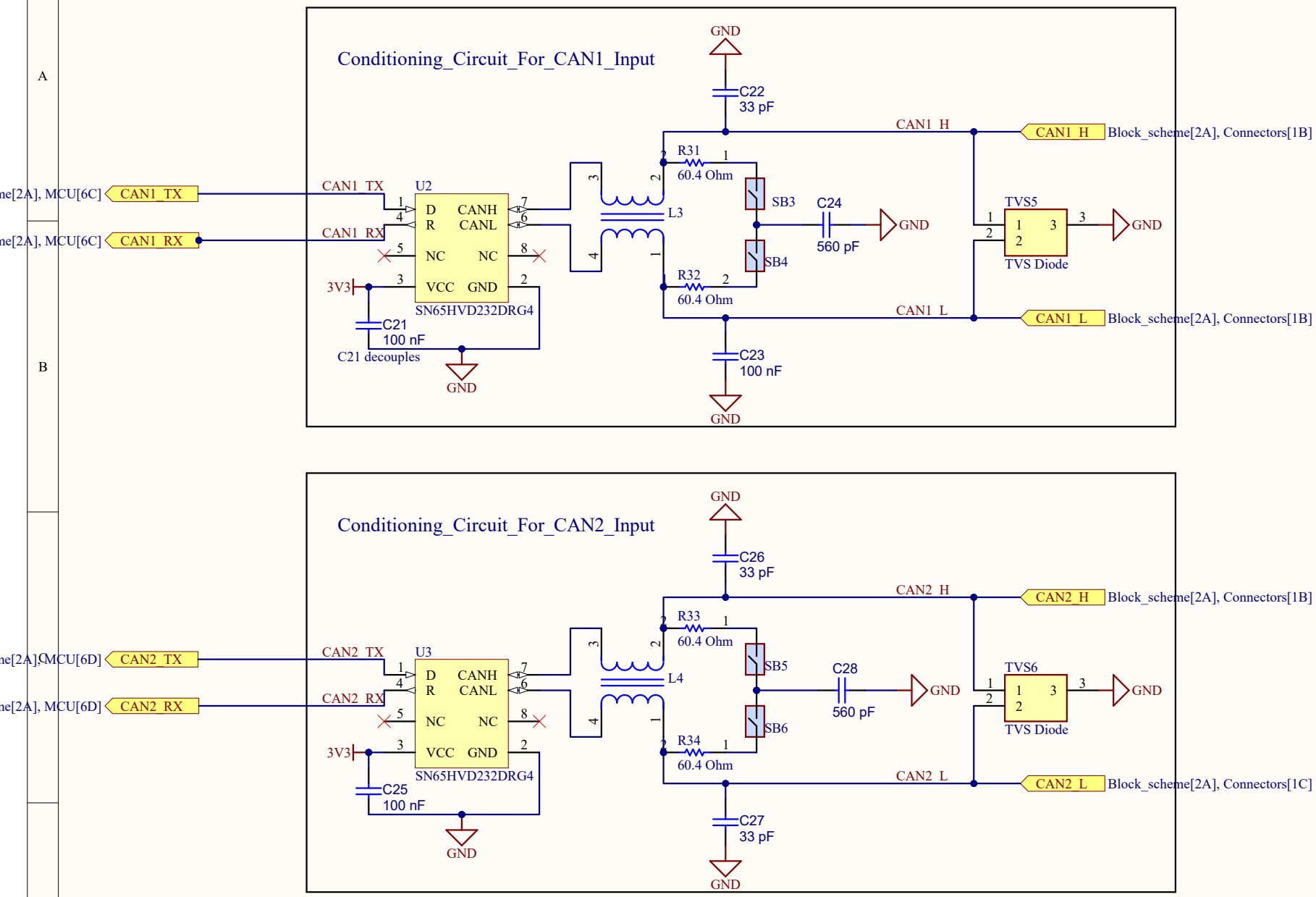

Title		
Size A	Number	Revision
Date: 5/01/2026		Sheet of
File: C:\Users\..\CAN.SchDoc		Drawn By:

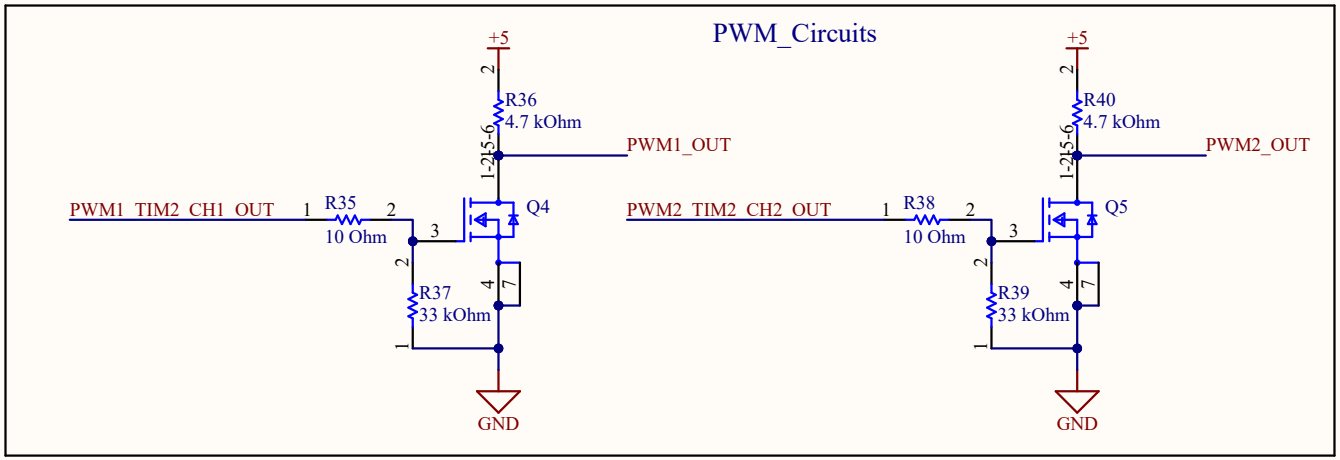

PWM1_OUT — PWM1_OUT — Block_scheme[2C], Connectors[3C]

PWM2_OUT — PWM2_OUT — Block_scheme[2C], Connectors[3C]

PWM1_TIM2_CH1_OUT — PWM1_uC_OUT — Block_scheme[2C], MCU[4

PWM2_TIM2_CH2_OUT — PWM2_uC_OUT — Block_scheme[2C], MCU[4

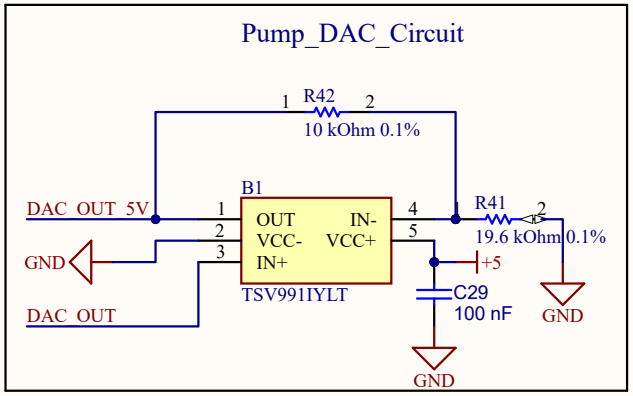

DAC for the cooling system Pumps.
The OP AMP is used as amplifier
with gain A = 1 + R42/R41 = 1.5

DAC_OUT — DAC_uC_OUT — Block_scheme[2C], MCU[4D]

DAC_OUT_5V — DAC_OUT_5V — Block_scheme[2C], Connectors[3D]

EXT_BUZZER+

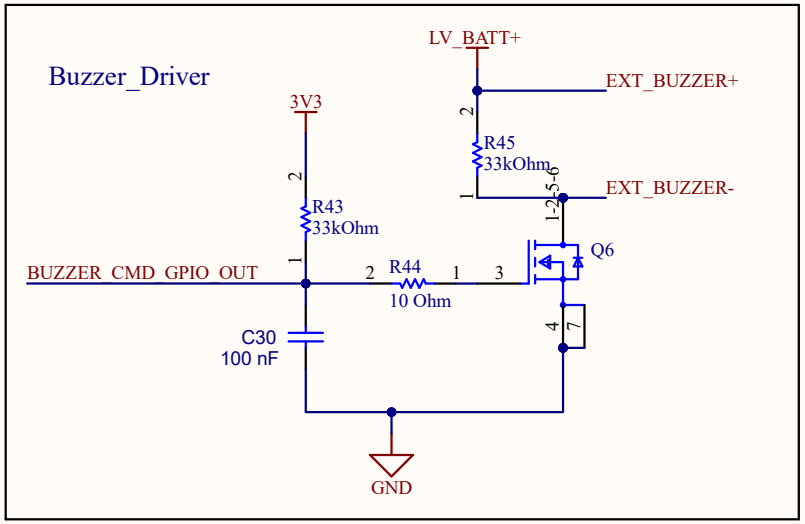

EXT_BUZZER- — EXT_BUZZER- — Block_schem

EXT_BUZZER+ — EXT_BUZZER+ — Block_scher

External Buzzer driver

BUZZER_CMD_GPIO_OUT — BUZZ_CMD_uC_OUT — Block_scheme[2C]

Title		
Size A	Number	Revision
Date: 5/01/2026		Sheet of
File: C:\Users\..\InputOutput.SchDoc		Drawn By: