DASH - v2.0 - SSS SSDD - SC25

Project: DashBoard

Object: System and Subsystem Specification, System And Subsystem Design Description

Revision Number: v2.0

Season: SC25

Document Overview

This document describes the specifics for the dashboard (DASH), the object of this document is to describe functional and non-functional requirements. Each requirement must be a single testable unit.

Acronyms and Abbreviations

Symbol	Meaning
ECU	Electronic Control Unit
DASH	Dashboard ECU
HMI	Human Machine Interface
OVP	Over Voltage Protection
OCP	Over Current Protection
LCD	Liquid Crystal Display
CAN	Controller Area Network
STEER	Steering Slave board
LED	Light emitting diode
SCS	System Critical Signal
THT	Through Hole Technology

Symbol	Meaning
SMD	Surface Mounted Device

System Overview

The main task of the DASH device is to provide a human machine interface (HMI) by the means of a TFT screen providing information during driving or during maintenance of the car. The device will drive a set of external LEDs to display system critical signals (SCS) and custom signals to the user. The device will drive and provide external signals for control of actuators like cooling pumps and cooling fans. The electronic control unit (ECU) will read external control signals given by the Steering (STEER) slave board that is a subsystem of the DASH. The STEER device will provide signals giving the position of 2 physical potentiometers and the status of 4 push-buttons.

Task description

The board controls the LCD screen on the cockpit in order to display to the driver crytical information such as SoC.

It controls the AMS, IMD and TS_OFF LEDs present on the cockpit and some other custom LEDs that are fully programmable.

Referenced Documents

RefId	Name	Source	Description
FSG25v1.1	Formula Student Rules 2025	Rule Book	Formula student rules for the year 2025
LCD	TFT Screen Datasheet	Data-Sheet	LCD screen Data-sheet
Micro Controller	STM32F446VET6	Data-Sheet	Micro Controller Data-sheet
External NOR Flash	SST25VF040B-50-4I-SAF	Data-Sheet	NOR Flash Data-Sheet

Required States and modes

DASHBOARD has the following power modes:

- **POWER OFF:** The system is shut off and not working;
- **NORMAL:** The system is working properly;
- **STANDBY:** The system is not shut off but it doesn't respond to external inputs;

System Capability Requirements

AMS, IMD, TS_OFF and RGB LEDs driving

- **AMS** and **IMD** LEDs:
  - Normally ON;
  - Colour: RED;
- **TS_OFF** LED:
  - Normally OFF;
  - Colour: GREEN;

These LEDs are positioned on the left side of the LCD display and are supplied by Power supply (5V, GND). The commands for these leds are decided by the micro controller which, based on some other informations, decide if the leds are on or off;

We decided to opt for SMD LED instead of THT since the space was a concern and the luminosity was not a problem.

LEDs driving design description
AMS & IMD, Normally OFF driving circuit:

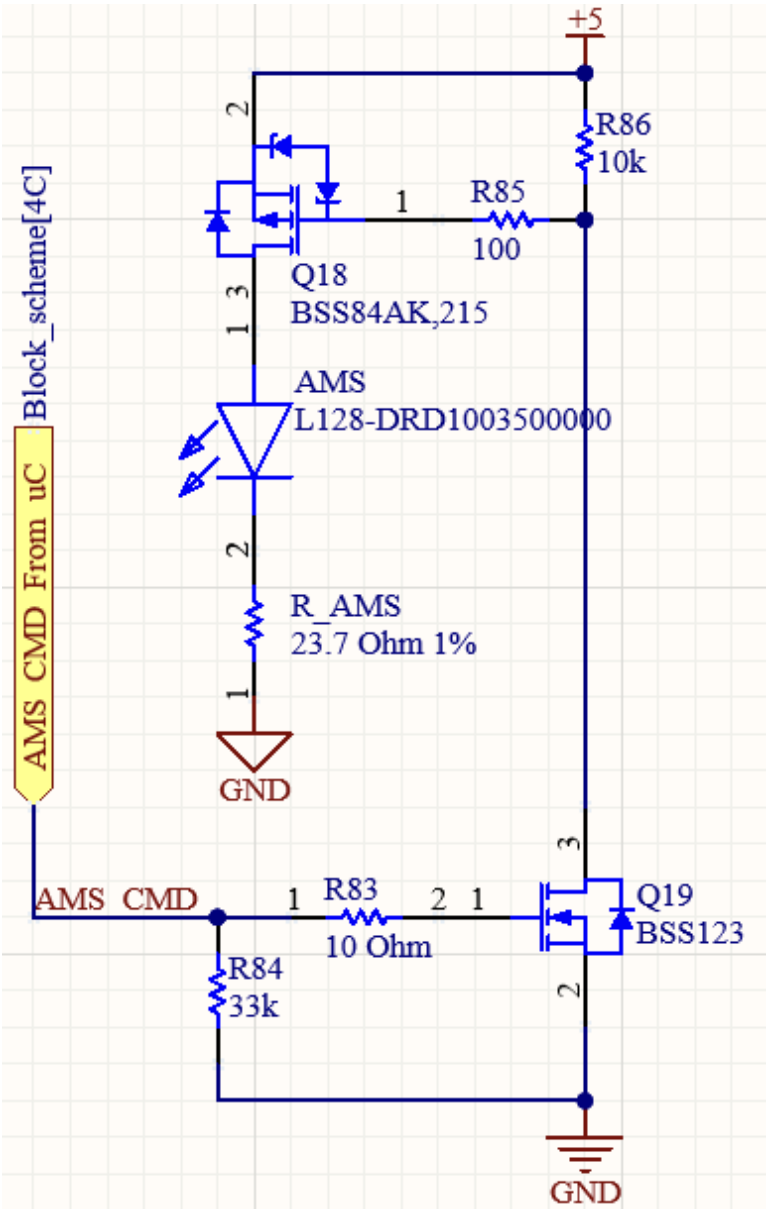

The circuit's working principle can be summarized as it follows

1. **When `AMS_CMD` is at Logic `0` (Low or no voltage applied):**
   - *Q19 (n-MOS)*: In the cutoff region (not conducting, behaves like an open switch);
   - *Q18 (p-MOS)*: Not conducting since no voltage is applied between Gate and Source (behaves like an open switch);
   - **Results:** No current flows through the LED and it remains OFF;
2. **When `AMS_CMD` is at Logic `1` (High voltage applied):**
   - *Q19 (n-MOS)*: Enters the saturation or linear region and conducts (acts like a closed switch). This pulls its drain (connected to R84) close to ground;
   - *Q18 (p-MOS)*: Its gate is connected to GND by means of the n-MOS and the Vgs increases to 5V, getting the p-MOS to enter the saturation region and act like a closed switch;
   - **Results:** The LED (AMS) turns ON;

Key Component Roles:

- **R86 (10kΩ):** Pull-up resistor to ensure Q18 remains in a conducting state when `AMS_CMD` is low;
- **R84 (33kΩ):** Pull-down resistor that ensures Q19's gate is at ground potential when `AMS_CMD` is low;
- **R83 (10Ω):** Current-limiting resistor for Q19 to prevent excessive current through its gate during transitions (Same functionality for R85);
- **R_AMS (23.7Ω):** Current-limiting resistor for the LED to control the brightness and protect it from overcurrent;

This circuit is used also for the IMD led, no difference can be observed.

PLEASE NOTE that the previously described circuit should not work like this. AMS and IMD are SCS signals and should be Normally ON, so when no signal is applied the LED should be emitting light. This is an error that is present on the board and needs to be fixed. To Fix this, a configuration like the one on the TS_OFF led could be used but instead of a pull down resistor, a pull up should be used.

TS_OFF LED, Normally OFF circuit:

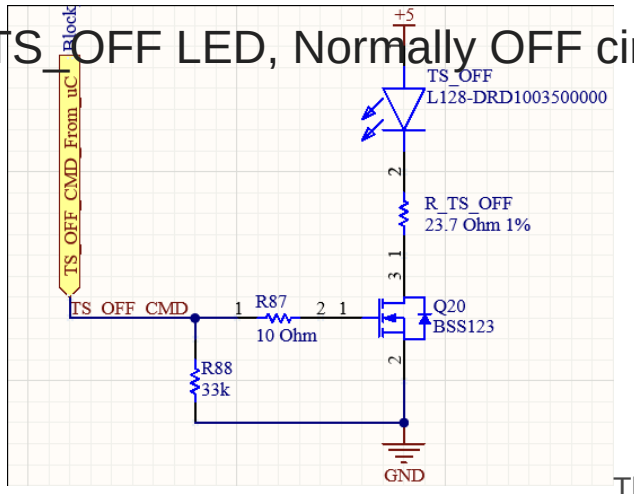

The circuit's working principle can be summarized as it follows:

1. **When TS_OFF_CMD is at Logic 0 (Low or no voltage applied):**
   - *Q20 (n-MOS)*: In the cutoff region (not conducting, acts like an open switch). With Q20 not conducting, there is no current path from the LED (TS_OFF) to ground, so the LED remains OFF;
   - **Results:** The LED (TS_OFF) is OFF;
2. **When TS_OFF_CMD is at Logic 1 (High voltage applied):**
   - *Q20 (n-MOS)*: Enters the saturation or linear region and starts conducting (acts like a closed switch). This provides a current path through R_TS_OFF (23.7Ω) and the LED (TS_OFF) to ground, allowing the LED to light up;
   - **Results:** The LED (TS_OFF) is ON;

Steering signals reading

The board must be able to read the signals coming from four push-buttons and 2 knob on the steering board. The steering board also need power supply (5V and GND).

- PUSH BUTTON: switch that can provide 5V or GND.
- Knob: provides voltage level in 0V-5V range.

Steering signals design description

Rotary-Switches Conditioning Circuit:

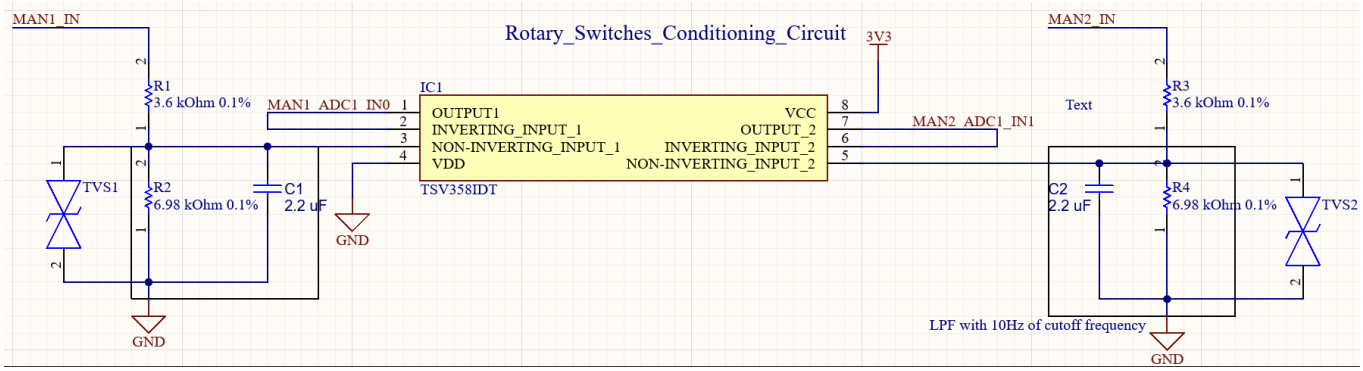

The circuit represents the conditioning circuit for the Rotary Switches signals from the Steering Board.

IC1: Buffer that decouples impedances before the signal enters the microcontroller;

R1, R2, R3, R4: Resistors that compose the voltage divider to rescale from 5V to 3.3V;

R2, R4 & C1, C2: Forms a LPF filter that is used to debounce the signal coming from the Steering Board;

TVS1 & TVS2: Used for OVP;

Buttons Conditioning Circuit:

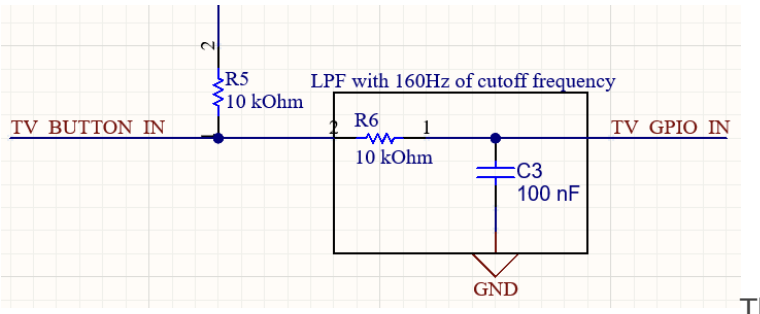

The circuit aside is used to condition the input signal from a pushbutton:

R5 is a pull-up resistor;

R6 & C3 forms a LPF filter that acts as debounce circuit for the input signal;

Custom LEDs Driving

The board must be able to drive 3 indipendent LEDs. In the final design, 3 different RGB LEDs were placed and left unprogrammed for future applications.

Like in the previous scenario, all devices are SMD.

RGB LEDs driving design description

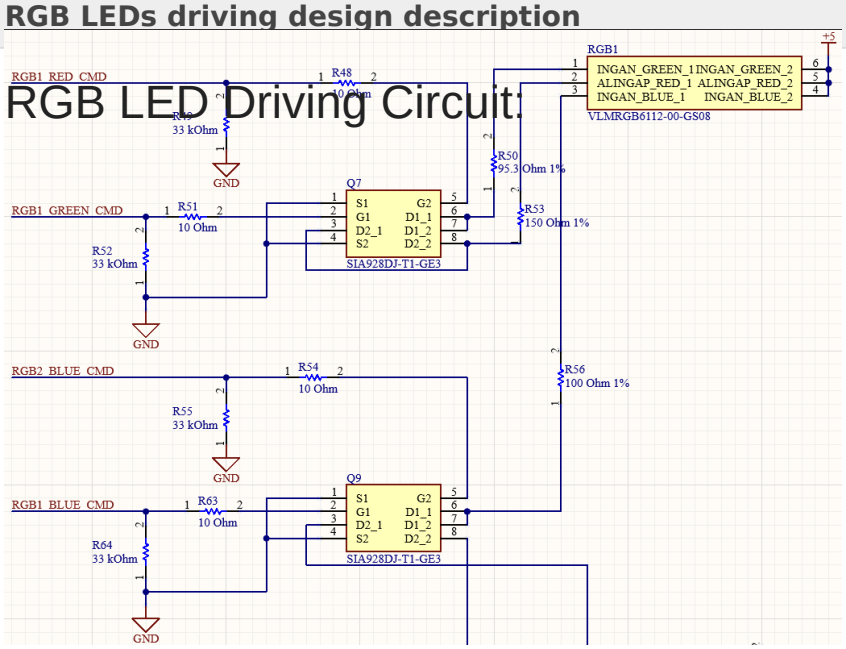

The following circuit is easy to understand due to the fact that the working principle is the same as the TS_OFF driving circuit, explained before.

The only difference that can be observed is the use of different LED driving resistors. This is due to the fact that the RGB led has different threshold voltage based on what color we want to light up.

The configuration is the same as the Normally OFF TS_OFF LED driving circuit, for each LED of the RGB IC, a n-MOS is used to switch the device on and off.

Since the RGB current is 20mA (from Data-Sheet), the resistor can be calculated with the formula: *R = (5V - Vth) / (20mA);*

In which, Vth is the corresponding RGB Threshold Voltage.

SDC Sensing

The DASH is able to sense whether the SDC circuit is opened or not. This is done by using a pin of the microcontroller and a condition circuit;

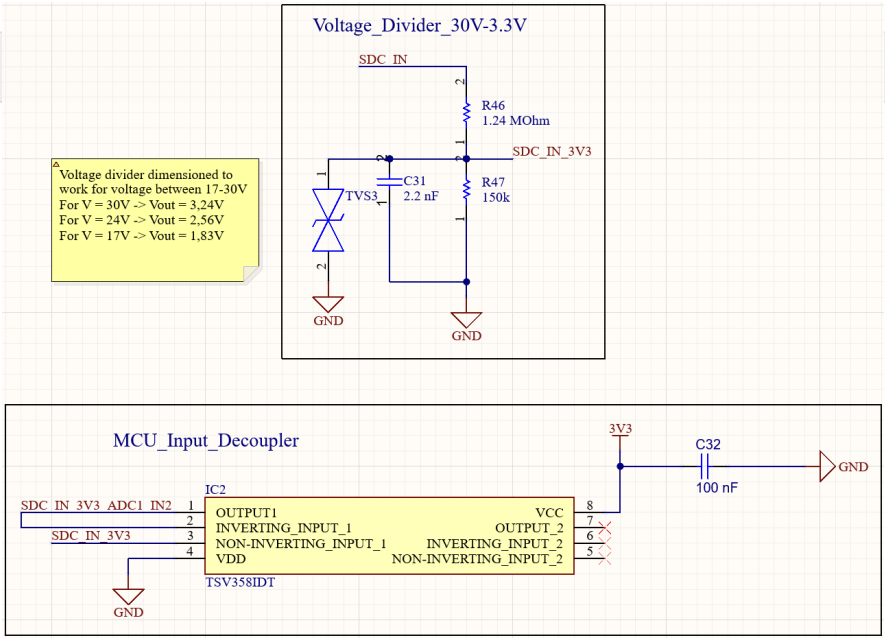

The SDC input passes through a circuit that prepares it before entering the microcontroller.

IC1 is a buffer that decouples impedances;

TVS3 offers OVP;

R46 & R47 are part of a voltage divider that can work with voltages up to 30V;

C31 & R47 forms a LPF filter with Cut Off frequency of ~500 Hz;

External Buzzer Driving

The board must be able to drive an external buzzer supplied by 24V/GND.

Buzzer Driving design description

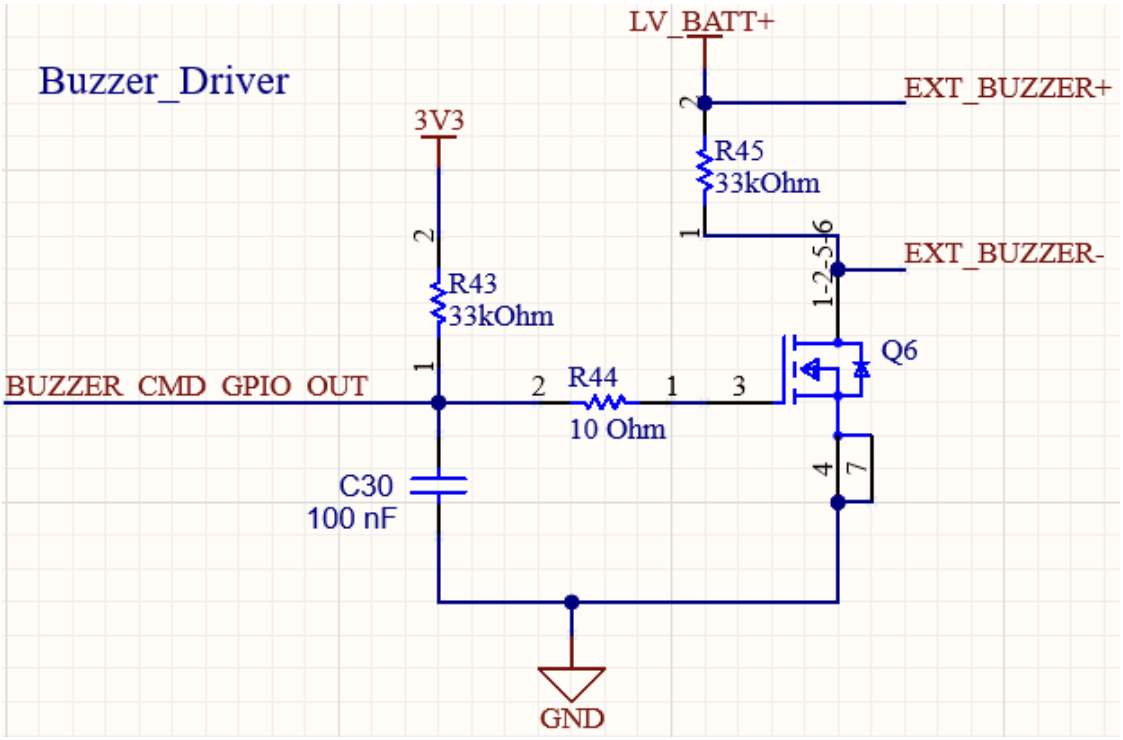

A n-MOS is used in this case in order to drive the buzzer with a voltage that is different than the one coming out from the microcontroller. Instead of driving the buzzer directly with 3V3, this command is used to polarize the transistor, which closes the circuit between LV_BATT+ and GND, driving the Buzzer.

Interface with a TFT screen via SPI

The board has a LCD TFT screen where are displayed information useful to the driver and to the team in the case of car maintenance. The screen is controlled via Serial Peripherals Interface protocol (SPI), which minimizes the number of pin needed for communication and provides robust connection.

The Data Sheet of the screen can be found in the table before.

SPI Connection design description

The screen is connected to the Board, and so to the microcontroller, by means of 2 header connectors, which have the following pinout:

Symbol	Function	Type	PIN number
3V3	Power Supply Connection	IN	Connector J2: Pin 1
GND	Ground Connection	IN/OUT	Connector J2: Pin 2
DISP_CS_GPIO_OUT	Chip Select Signal from uC	IN	Connector J2: Pin 3
DISP_RST_GPIO_OUT	Reset Signal from uC	IN	Connector J2: Pin 4
DISP_DC_GPIO_OUT	Data/Command from uC	IN	Connector J2: Pin 5
DISP_SPI1_MOSI	Master Output Slave Input from uC	IN	Connector J2: Pin 6
DISP_SPI1_SCK	Serial Clock	IN/OUT	Connector J2: Pin 7
3V3	Brightness Pin: connected to 3V3 for maximum brightness	IN	Connector J2: Pin 8
DISP_SPI1_MISO	Master Input Slave Output to uC	OUT	Connector J2: Pin 9

A decoupling capacitor is added between 3V3 and GND in order to stabilize the power supply line and prevent eventual voltage drops.

The display is connected to SPI1 ports of the microcontroller.

PWM and DAC output

The board has two PWM output in the 0-5V range and a DAC output in the 0-5V range.

- PWM circuits are used to drive the fan used for the cooling of the car;
- DAC is used to control the cooling system pump;

PWM & DAC design description

PWM Circuit:

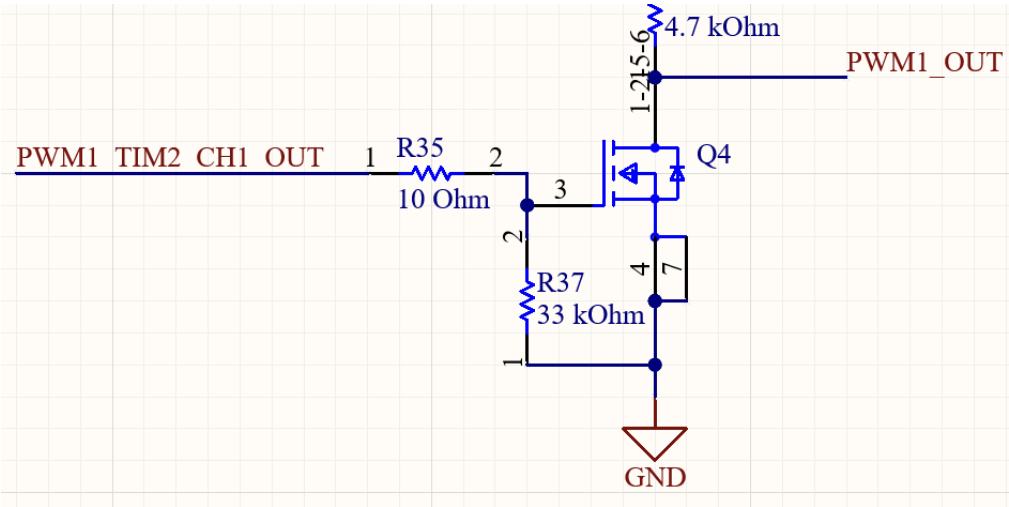

The PWM circuit is fairly easy to understand:

The PWM output from the microcontroller has dynamics 3V3 - 0V, which is incompatible with what the fans work with.

This is why a n-MOS is used, it acts like a switch for the 5V supply voltage. This allows to use dynamic of 5V - 0V, compatible with the fans.

DAC Circuit:

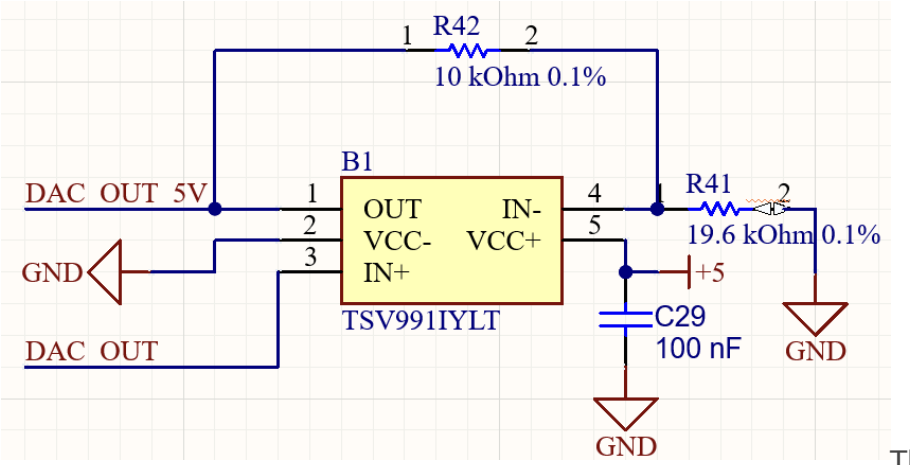

This circuit is used to amplify the output of the DAC from the microcontroller, in order to obtain a signal dynamic of 5V - 0V.

B1 is an operational amplifier which is used in non inverting configuration. With the use of **R42** and **R41**, a gain of 1.5 can be obtained (*A = 1 + R42/R41*).

C29 is used as decoupling capacitor, helps with stability of Vcc power supply.

The output DAC_OUT_5V can be directly sent to the pump.

RTD button

The DASH systems contains a conditioning circuit for the RTD Button that has the same functionality and structure as the other push button conditioning circuit. To visualize the circuit, please refer to ***Steering Signals Reading*** section of this page.

NOR Flash External Memory

The board has a Syncronous NOR Flash memory that communicates with the micro-controller. This helps with the management of data that could be stored for future uses such as failures logger. The implementation of this memory has been done electronically but no use of that space has been done at the moment, it remains fixed for future uses.

NOR Flash design description

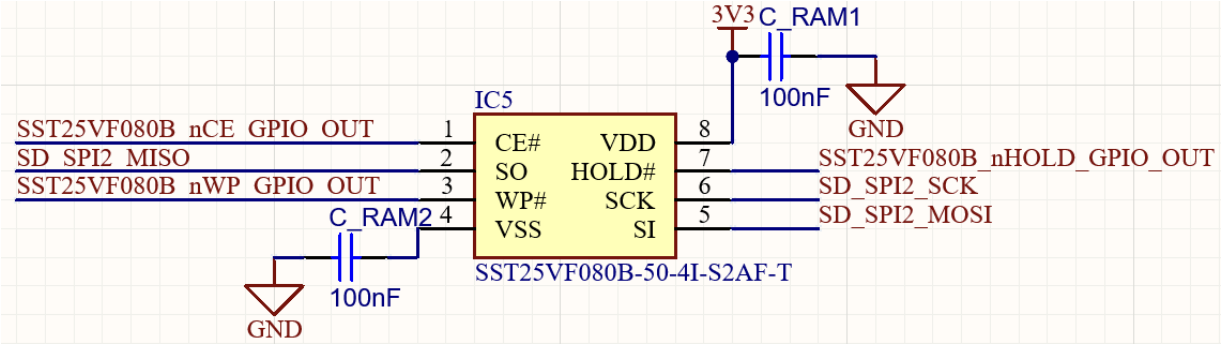

The external memory presents a serial interface (SPI) to communicate with the microcontroller. For all connections please refer to the reported Data Sheet.

Two capacitor are added in order to stabilize power supply voltage.

Micro-controller

The microcontroller used is an STM32F446VET6 with 100 pin package. This has been chosen because it has sufficient internal RAM in order to let the screen run correctly and smoothly. Also, the conditioning circuit of the Microcontroller system has been done following the rules written on the [wiki page](#).

CANs

The DASH is connected via CAN bus to the rest of the car system in order to provide fundamental informations. The CAN circuit is standard for all systems that requires it and its working principle is explained as it follows.

CAN design description

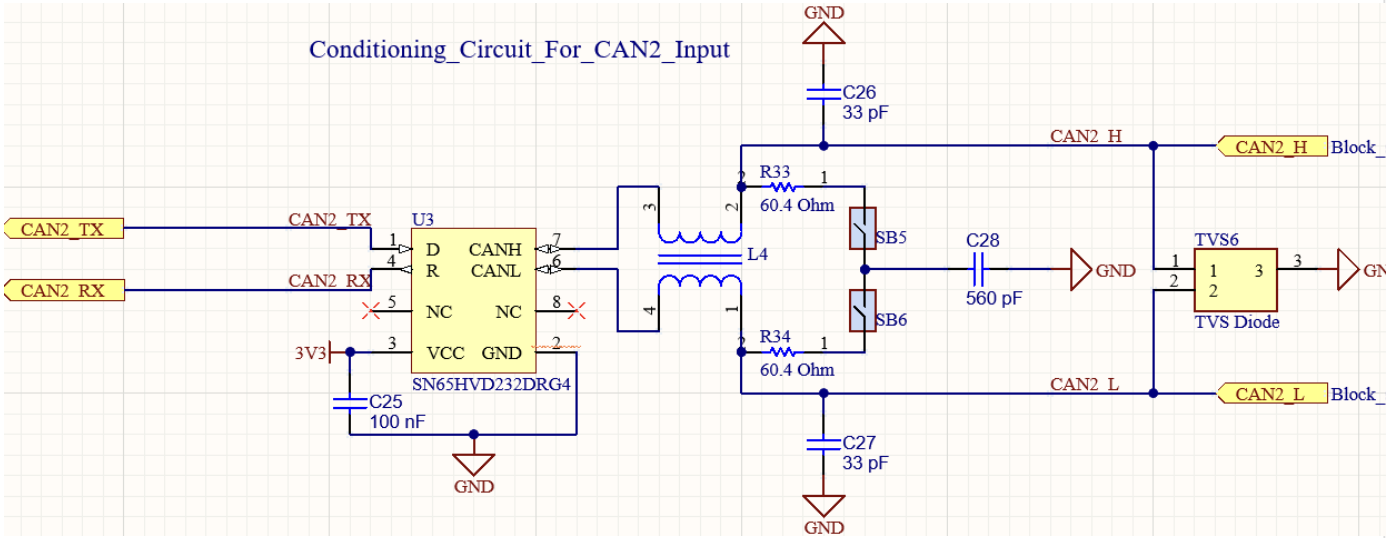

The circuit reported above is the conditioning circuit for a Can transceiver system.

- **U3:** CAN Transceiver, 3V3. This device is the core of the system and converts microcontroller signals to differential signals for each CAN Bus line;
- **C25, C26 & C27:** Decoupling capacitor in order to minimize power supply noise and guarantee stable voltage;
- **L4:** Transformer which provides isolation between the Bus lines and the transceiver. It also creates a filter which makes the systems more robust to common mode noise;
- **R33, R34 & C28:** Resistors for the CAN bus lines ending. Instead of a 120Ω complessive resistor, two 60Ω resistors are used and paired with a 560pF capacitor in a *split termination* for the lines. This systems is used to guarantee a more robust connection, since R and C creates a Low Pass Filter which helps reducing noise on the lines. To better understand this, a look at this article could be useful;
- **SB5 & SB6:** Solder bridges that provide more flexibility to the design. If the transceiver is put at the end of the CAN Bus line, the 2 resistors must be connected, if not, the 2 resistors can be left disconnected;
- **TVS6:** Provides OVP;

This design is standard in every circuit which needs CAN connection.

PSU

A different PSU has been used for this design, in order to minimize space occupation and provide stable power across all DASH subsystems.

PSU design description

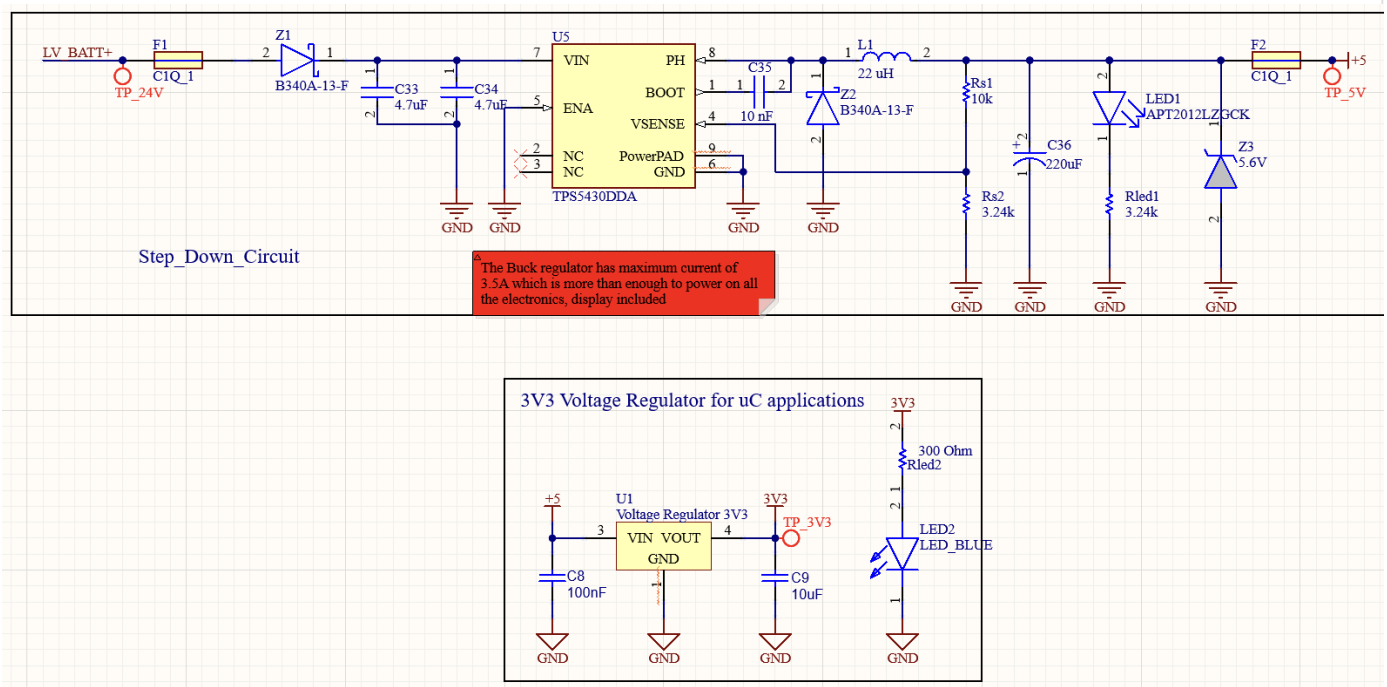

The circuit above is composed of:

- **U5:** Buck regulator wich transforms the LV_BATT+ into 5V power supply;
- **F1 & F2:** Fuses used for OCP;
- **Z3:** Zener Diode used for OVP;
- All other components can be retrieved by looking at the U5 IC Data-Sheet and doing all calculations.

The 5V is then brought to 3V3 by means of a voltage regulator **U1**. The correct functioning of the circuit can be tested by looking at **LED2**, which should be on if everything is working correctly.

System External Interface Requirements

Functions

Symbol	Function	Type	Pin
CAN1_L	Can 1 Low Line	IN/OUT	Connector J4, Pin: 1
GND	Ground Connection	IN/OUT	Connector J4, Pin: 2
CAN1_H	Can 1 High Line	IN/OUT	Connector J4, Pin: 3
CAN1_L	Can 1 Low Line	IN/OUT	Connector J4, Pin: 4
GND	Ground Connection	IN/OUT	Connector J4, Pin: 5
CAN1_H	Can 1 High Line	IN/OUT	Connector J4, Pin: 6
CAN2_L	Can 2 Low Line	IN/OUT	Connector J5, Pin: 1
GND	Ground Connection	IN/OUT	Connector J5, Pin: 2
CAN2_H	Can 2 High Line	IN/OUT	Connector J5, Pin: 3
CAN2_L	Can 2 Low Line	IN/OUT	Connector J5, Pin: 4
GND	Ground Connection	IN/OUT	Connector J5, Pin: 5
CAN2_H	Can 2 High Line	IN/OUT	Connector J5, Pin: 6

Symbol	Function	Type	Pin
TV_BUTTON_IN	Torque Vectoring Push Button (From Steering Board)	IN	Connector J6, Pin: 1
TC_BUTTON_IN	Traction Control Push Button (From Steering Board)	IN	Connector J6, Pin: 2
LC_BUTTON_IN	Launch Control Push Button (From Steering Board)	IN	Connector J6, Pin: 3
MAN1_IN	Rotary Switch 1 (From Steering Board)	IN	Connector J6, Pin: 4
GENERAL_BUTTON_IN	General Push Button (From Steering Board)	IN	Connector J6, Pin: 5
GND	Ground Connection	IN/OUT	Connector J6, Pin: 6
5V	Power Supply Voltage (5V)	OUT	Connector J6, Pin: 7
MAN2_IN	Rotary Switch 2 (From Steering Board)	IN	Connector J6, Pin: 8
LV_BATT+	Power Supply Voltage (24V)	IN	Connector J7, Pin: 1
EXT_BUZZER+	External Buzzer Positive Driving Voltage	OUT	Connector J7, Pin: 2
EXT_BUZZER-	External Buzzer Negative Driving Voltage	OUT	Connector J7, Pin: 3
GND	Ground Connection	IN/OUT	Connector J7, Pin: 4
SDC_IN	ShutDown Line Sense	IN	Connector J7, Pin: 5
SDC_IN	ShutDown Line Sense	IN	Connector J7, Pin: 6
5V	Power Supply Voltage (5V)	OUT	Connector J7, Pin: 7
GND	Ground Connection	IN/OUT	Connector J7, Pin: 8
PWM1_OUT	PWM Signal Out (From uC)	OUT	Connector J8, Pin: 1
PWM2_OUT	PWM Signal Out (From uC)	OUT	Connector J8, Pin: 2
RTD_BUTTON_IN	Ready To Drive Button	IN	Connector J8, Pin: 3
DAC_OUT_5V	DAC OUT (From uC)	OUT	Connector J8, Pin: 4

Symbol	Function	Type	Pin
5V	Power Supply Voltage (5V)	OUT	Connector J8, Pin: 5
GND	Ground Connection	IN/OUT	Connector J8, Pin: 6
GND	Ground Connection	IN/OUT	Connector J8, Pin: 7
GND	Ground Connection	IN/OUT	Connector J8, Pin: 8

PCB Design Constraints

Some constraints on the PCB component layout were given by:

- Maximum dimension of the board:

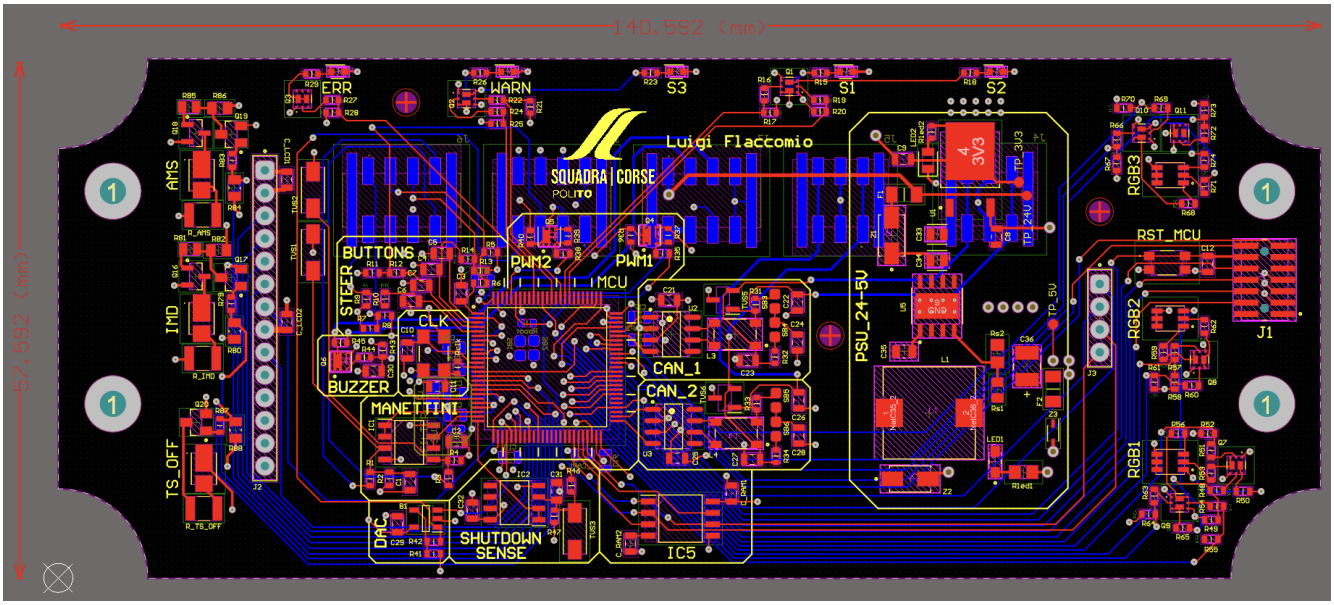

The board was designed in order to minimize space dimensions and make the system as small and thin as possible. Only with that characteristic, the DASH system would have looked good to the eye.

- PSU routing constraints:

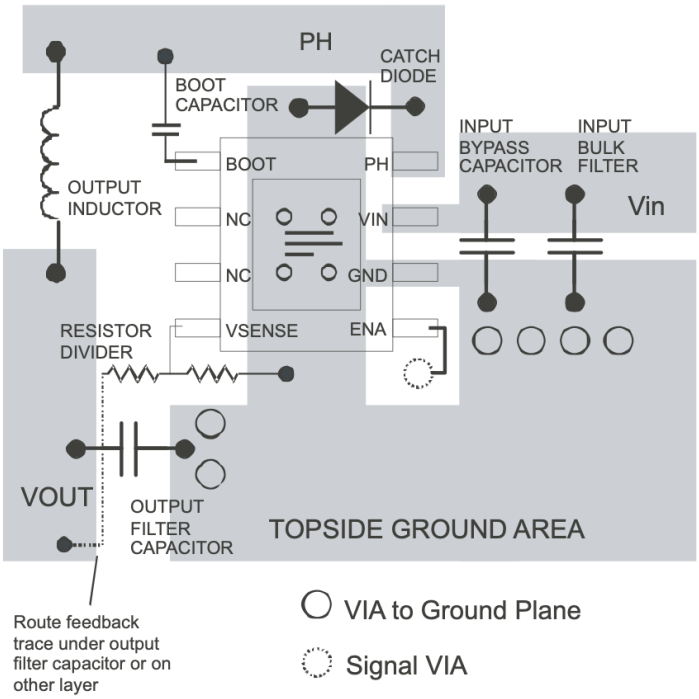

In order to minimize noise and make the PSU sub-circuit robust, the Data-Sheet PCB layout has been followed and reported into the final design.

Design and Construction constraints

The DASH board is connected to the car system through a box that provides water and dust protection. This box is then connected to the cockpit and can be used to provide fundamental informations to the driver in every moment.

Changelog

v2.0 - 02/02/2025

Revision #42
Created 30 August 2024 16:17:56
Updated 20 July 2025 19:41:20 by Luigi