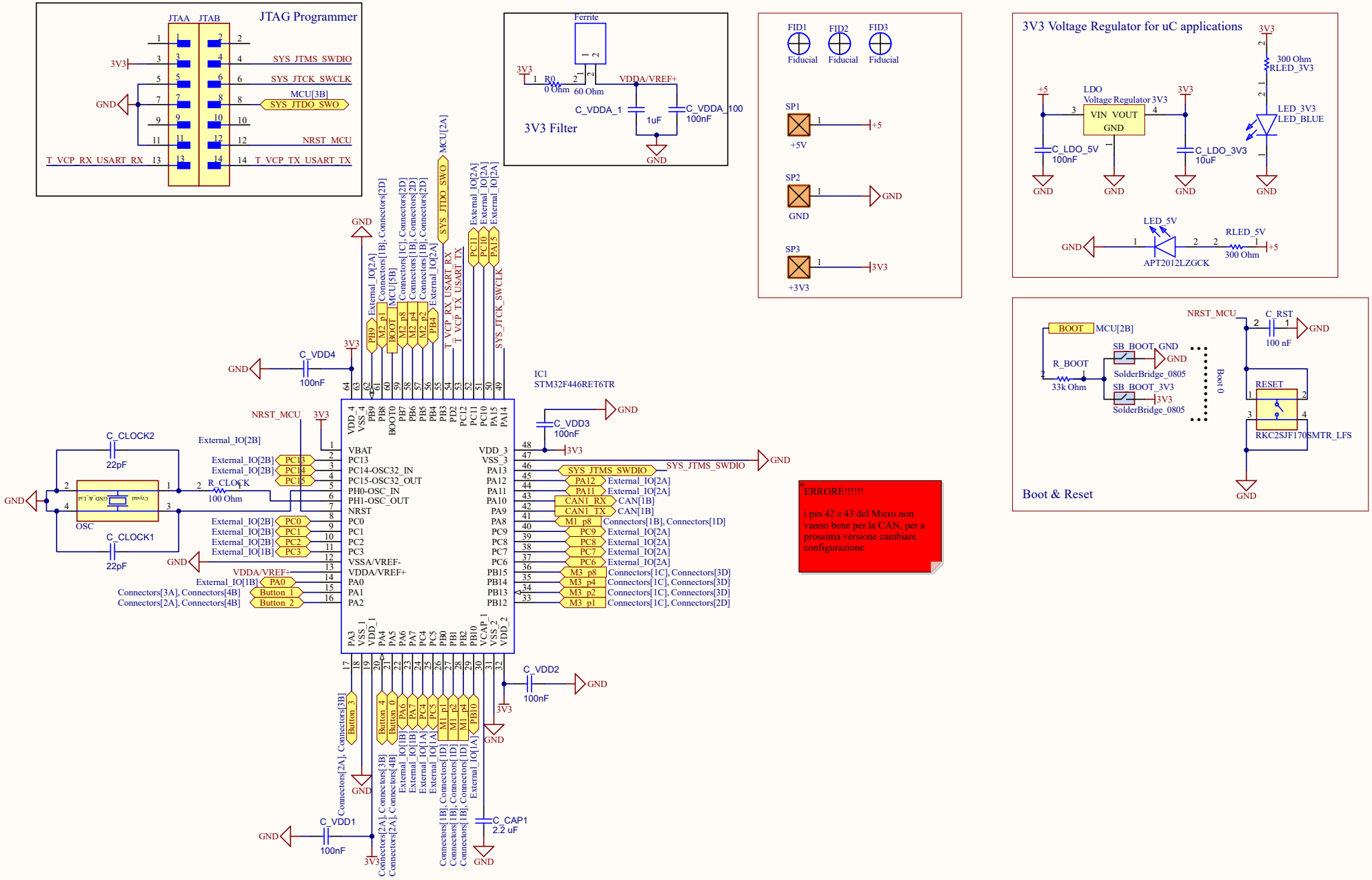
JTAG Programmer
JTAA JTAB
3V3
GND
SYS_JTMS_SWDIO
SYS_JTCK_SWCLK
MCU[3B]
SYS_JTDO_SWO
NRST_MCU
T_VCP_RX_USART_RX
T_VCP_TX_USART_TX
3V3 Filter
Ferrite
R0
0 Ohm
60 Ohm
VDDA/VREF+
C_VDDA_1
1uF
C_VDDA_100
100nF
FID1
FID2
FID3
Fiducial
SP1
+5V
SP2
GND
SP3
+3V3
3V3 Voltage Regulator for uC applications
300 Ohm
RLED_3V3
+5
LDO
Voltage Regulator 3V3
VIN VOUT
GND
C_LDO_5V
100nF
C_LDO_3V3
10uF
LED_3V3
LED_BLUE
LED_5V
APT2012LZGCK
RLED_5V
300 Ohm
Boot & Reset
BOOT
MCU[2B]
R_BOOT
33k Ohm
SB_BOOT_GND
SB_BOOT_3V3
SolderBridge_0805
Boot 0
NRST_MCU
C_RST
100 nF
RESET
RKC2SJF170SMTR_LFS
IC1
STM32F446RET6TR
C_VDD4
100nF
C_VDD3
100nF
C_VDD2
100nF
C_VDD1
100nF
C_CAP1
2.2 uF
C_CLOCK2
22pF
C_CLOCK1
22pF
R_CLOCK
100 Ohm
OSC
External_IO[2B]
External_IO[1B]
Connectors[3A], Connectors[4B]
Connectors[2A], Connectors[4B]
Button_1
Button_2
CAN1_RX
CAN1_TX
CAN[1B]
Connectors[1B], Connectors[1D]
Connectors[1C], Connectors[3D]
Connectors[1C], Connectors[2D]
Connectors[2A], Connectors[3B]
ERRORE!!!!!!
i pin 42 e 43 del Micro non vanno bene per la CAN, per a prossima versione cambiare configurazione

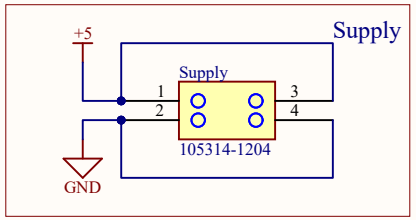

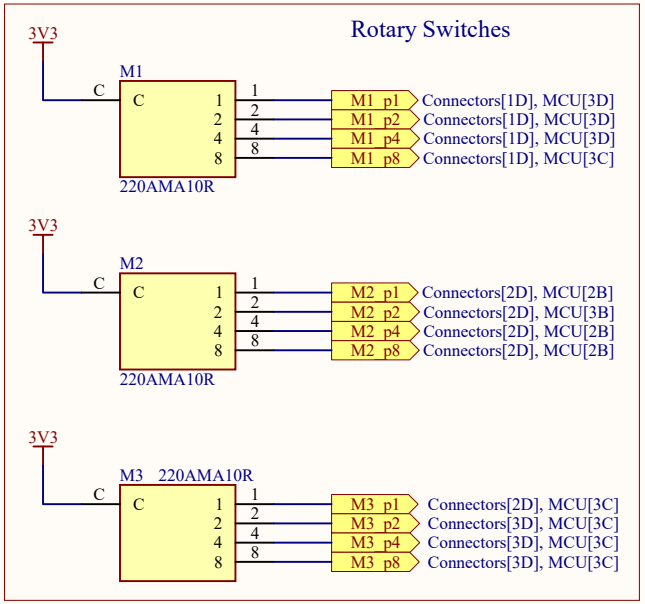

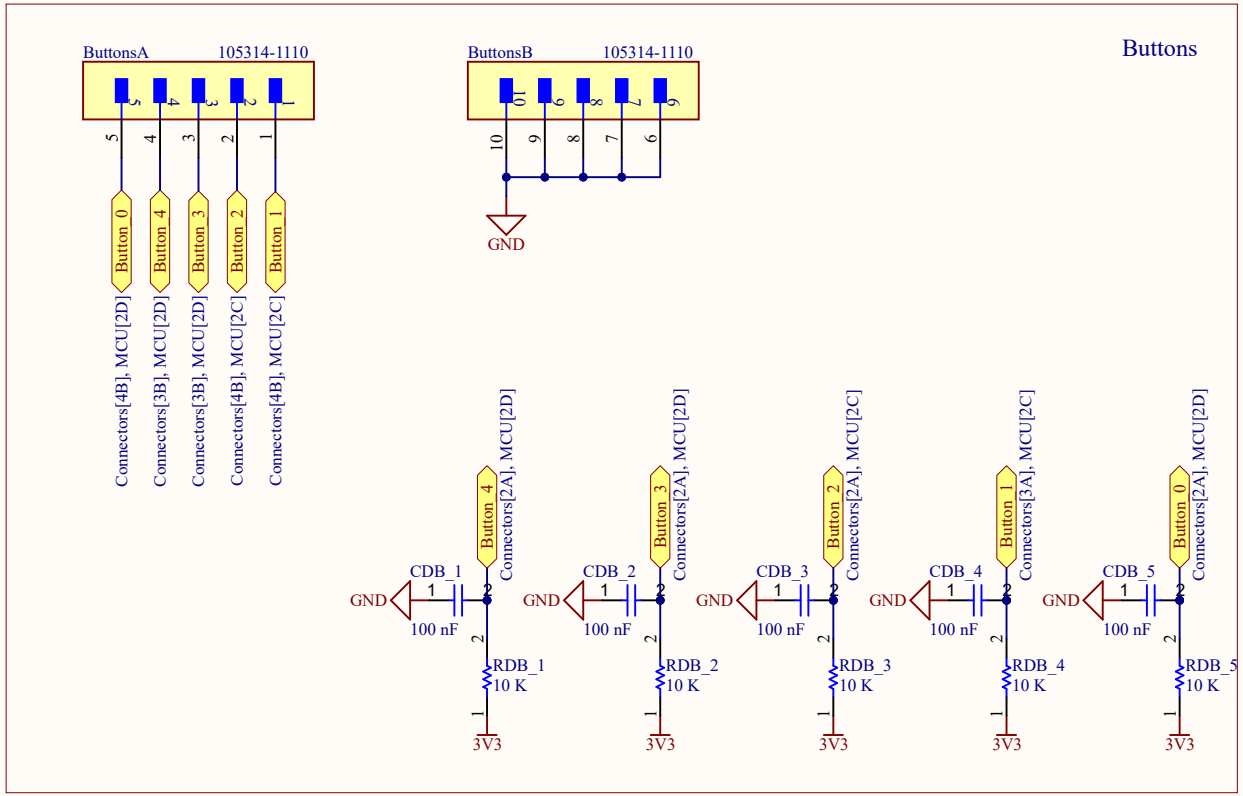

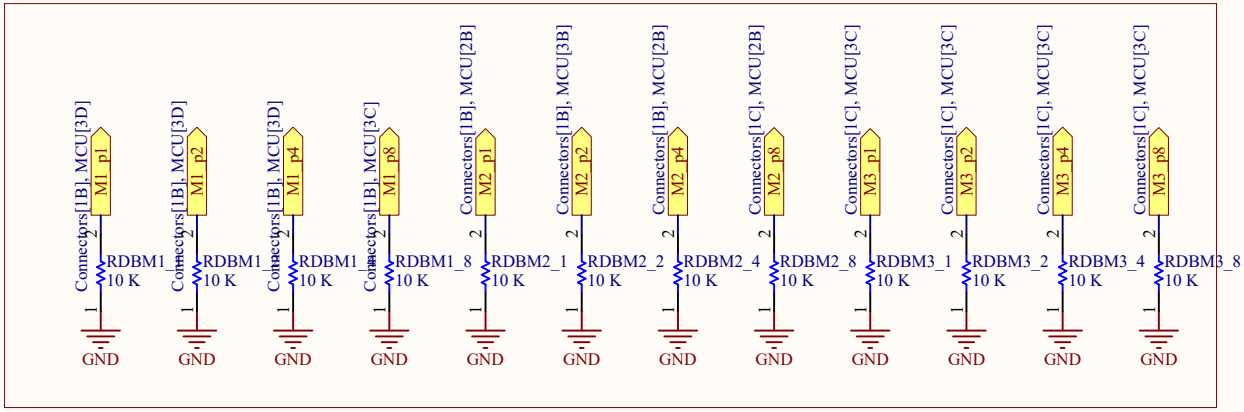

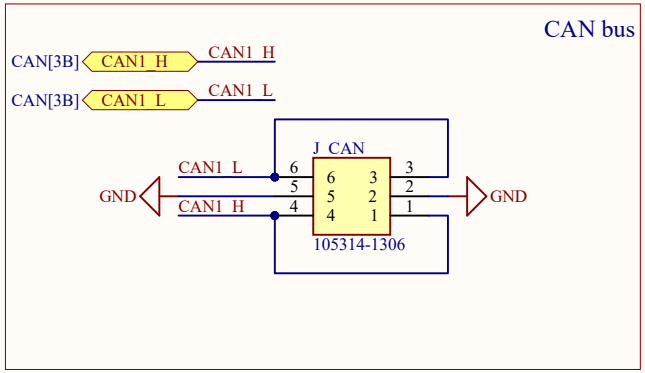

Title	Connectors	
Size A4	Number	Revision
Date: 5/01/2026		Sheet of
File: C:\Users\..\Connectors.SchDoc		Drawn By:

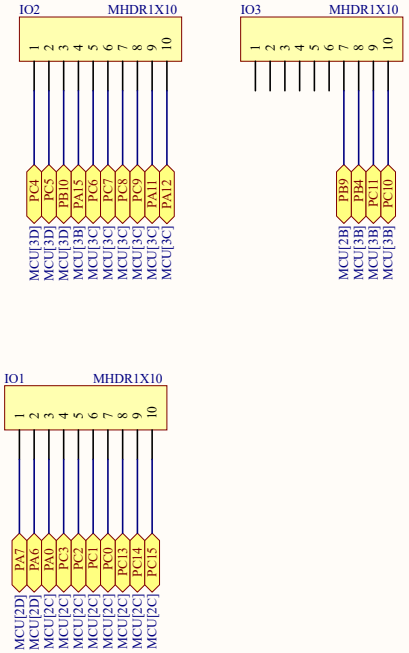

Title	External_IO	
Size B	Number	Revision
Date: 5/01/2026		Sheet of
File: C:\Users\..\External_IO.SchDoc		Drawn By:

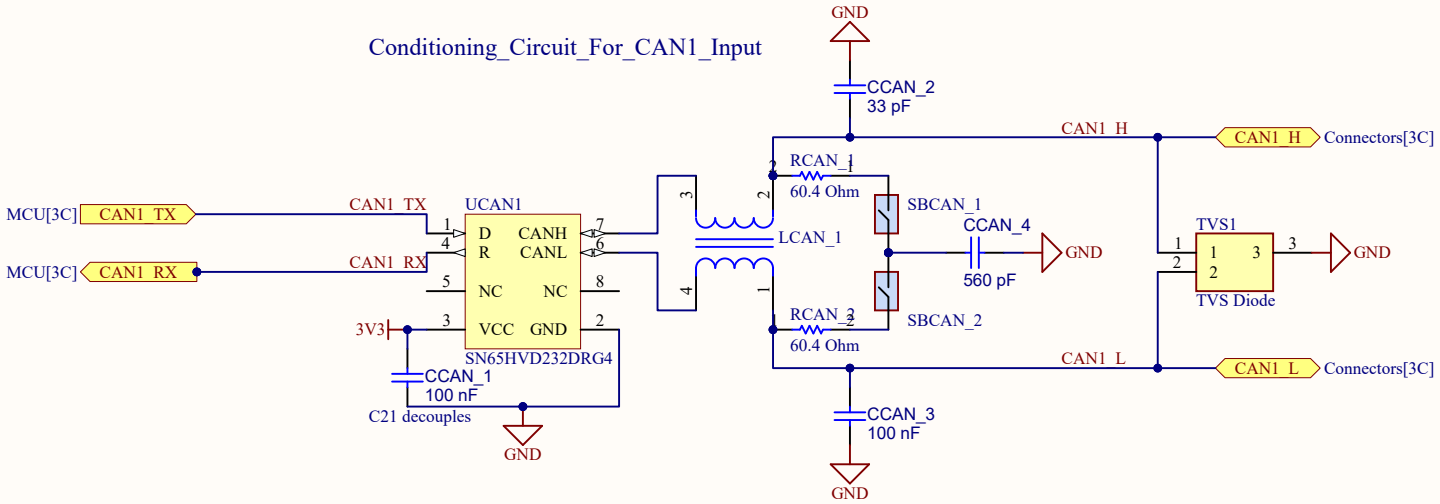

Title	CAN	
Size A4	Number	Revision
Date: 5/01/2026		Sheet of
File: C:\Users\..\CAN.SchDoc		Drawn By: