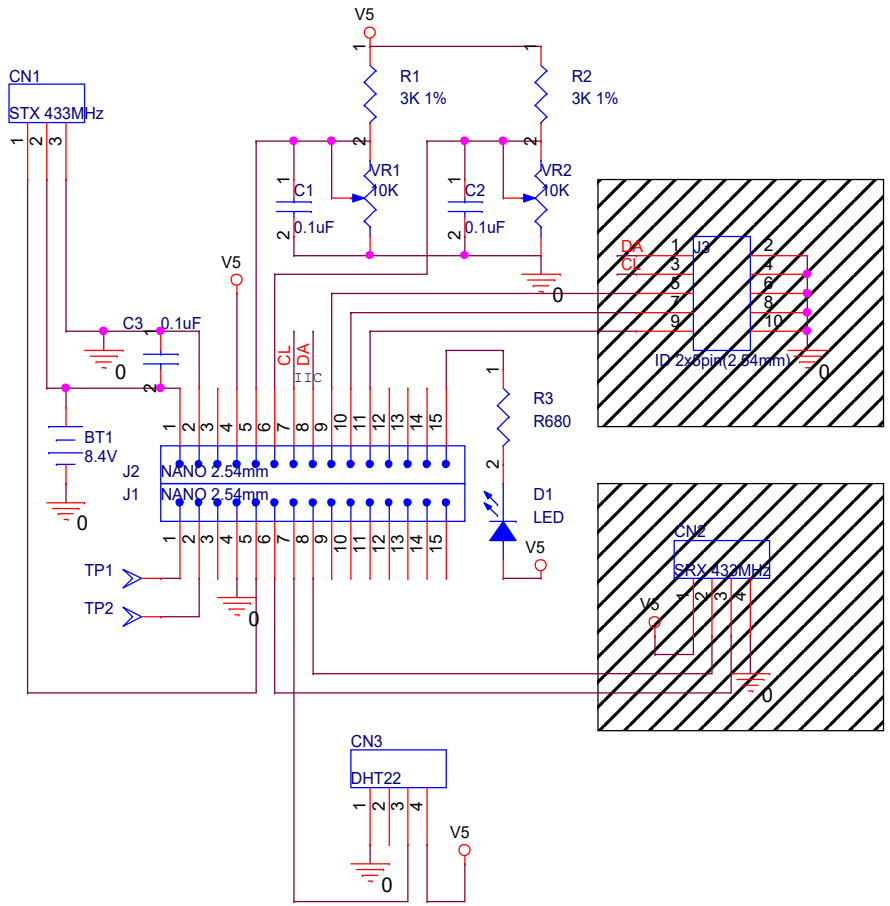

Title
RF Temperture

Size	Document Number	Rev
Custom	<Doc>	V11

Date: Saturday, June 22, 2019 Sheet 1 of 1