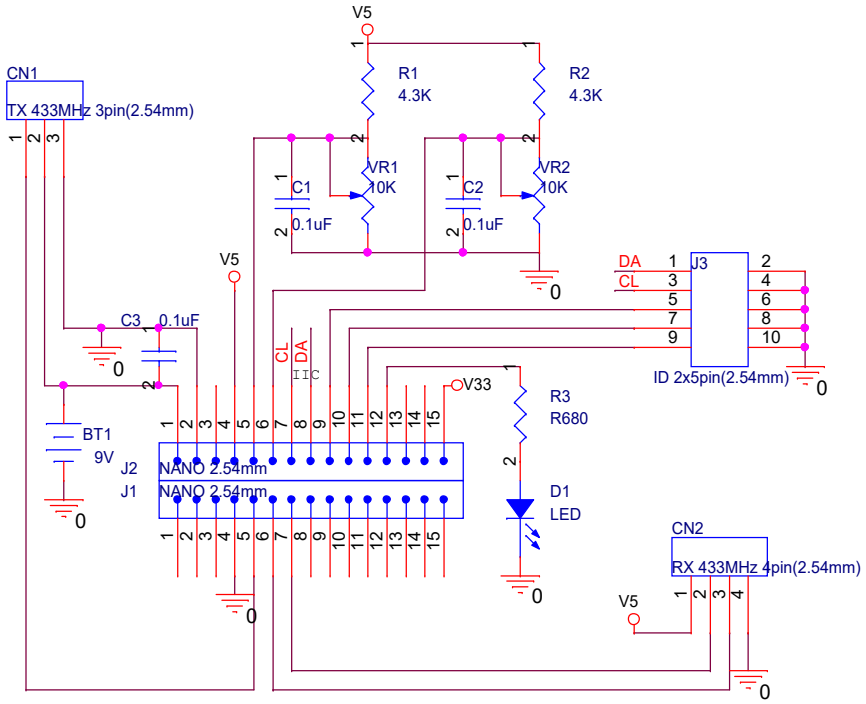

Title
RF Temperture V10

Size	Document Number	Rev
Custom	<Doc>	V10

Date: Wednesday, June 19, 2019 Sheet 1 of 1