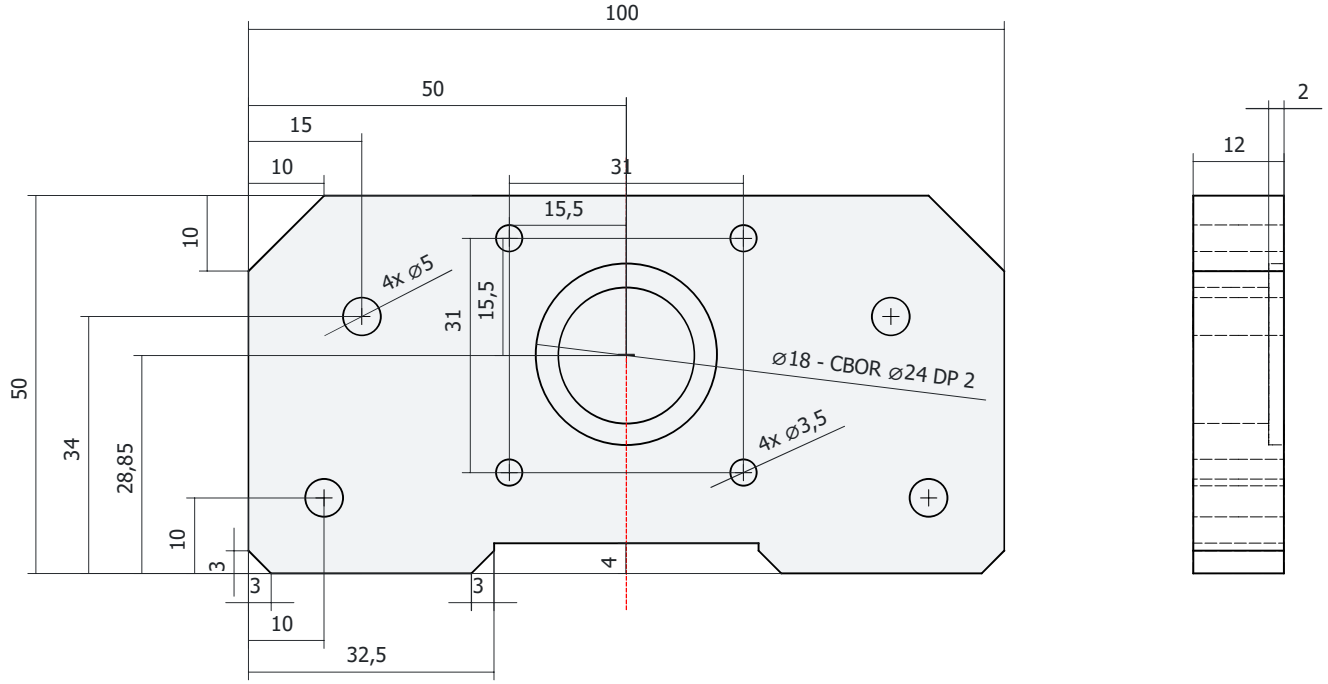

DESIGNED BY: L. Villiers DATE: 08/05/2026		Microphotography Rig X-Axis Motor Mount Plate	
SIZE A4			
SCALE 1 : 1	WEIGHT (kg) N/A	DRAWING NUMBER X-01	SHEET 1 / 13

This drawing is our property; it can't be reproduced or communicated without our written consent.

G	_
F	_
E	_
D	_
C	_
B	_
A	_

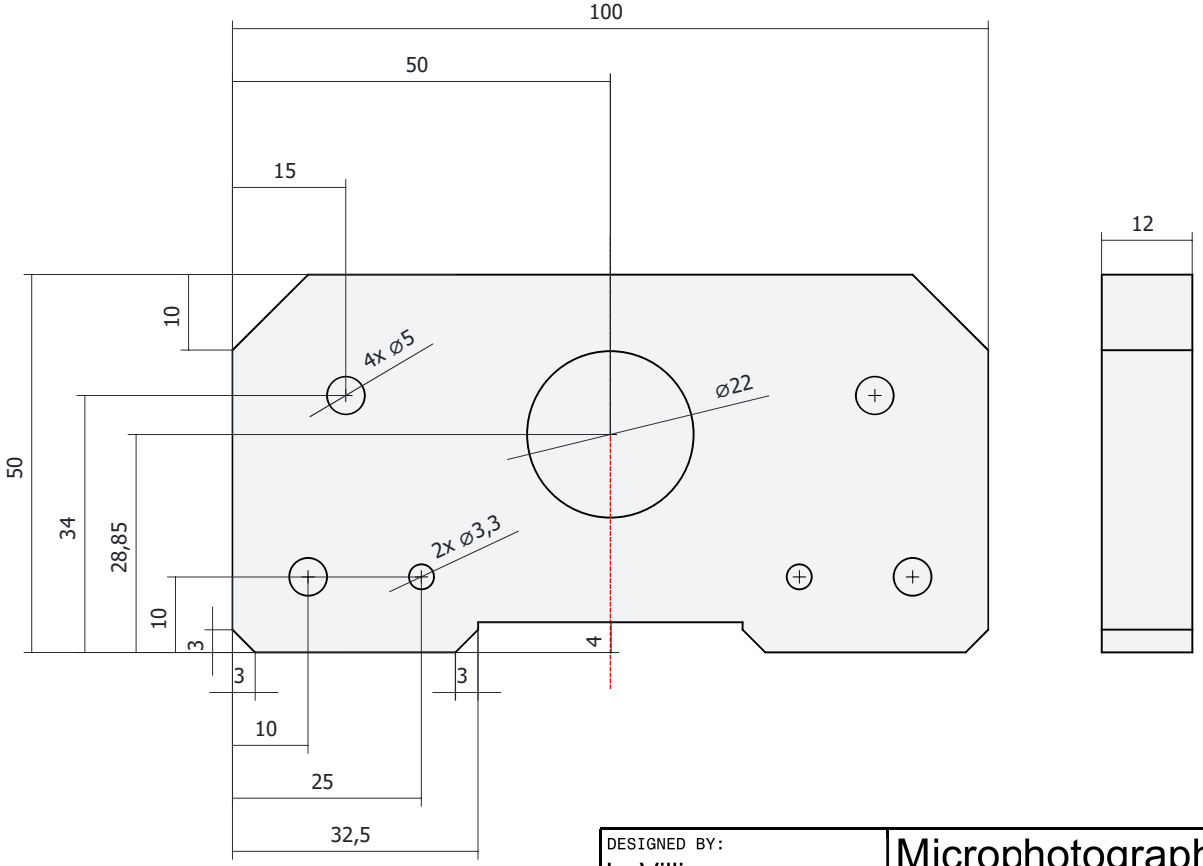

DESIGNED BY: L. Villiers DATE: 08/05/2026		Microphotography Rig X-Axis End Plate	
SIZE A4			
SCALE 1 : 1	WEIGHT (kg) N/A	DRAWING NUMBER X-02	SHEET 2 / 13

This drawing is our property; it can't be reproduced or communicated without our written consent.

G	_
F	_
E	_
D	_
C	_
B	_
A	_

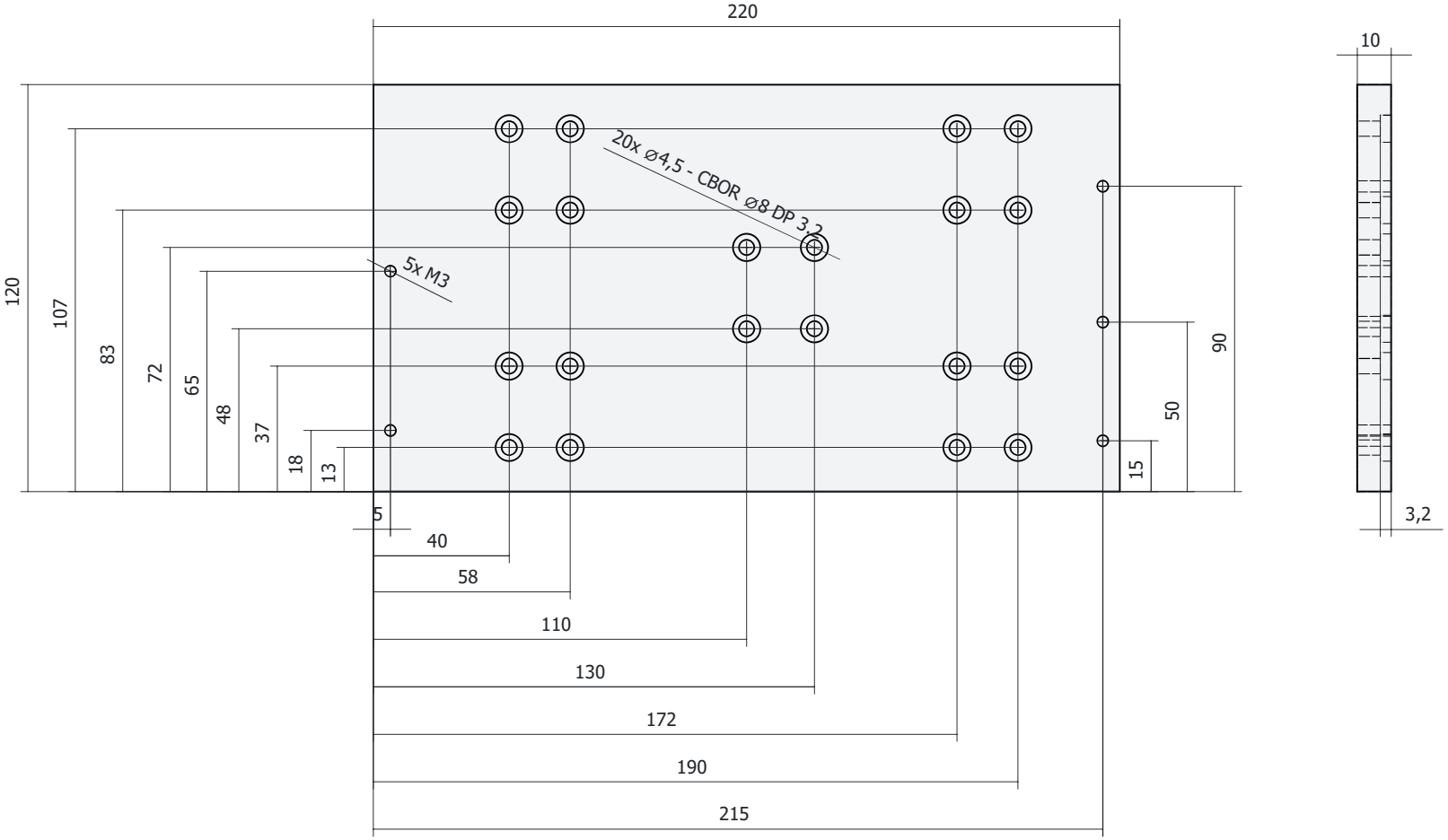

DESIGNED BY: L. Villiers DATE: 08/05/2026		Microphotography Rig X-Axis Carriage Plate	
SIZE A4			
SCALE 1 : 2	WEIGHT (kg) N/A	DRAWING NUMBER X-03	SHEET 3 / 13

This drawing is our property; it can't be reproduced or communicated without our written consent.

G	_
F	_
E	_
D	_
C	_
B	_
A	_

Item 1: SCS8UU Spacer - QTY: 8

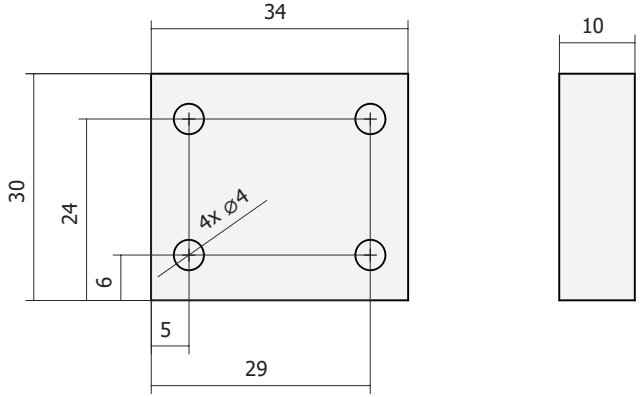

Item 2: T8 Nut Spacer - QTY: 2

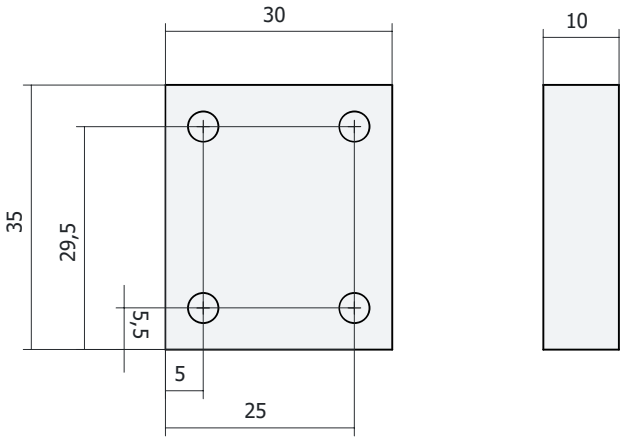

DESIGNED BY: L. Villiers DATE: 08/05/2026		Microphotography Rig Horizontal Spacers	
SIZE A4			
SCALE 1 : 1	WEIGHT (kg) N/A	DRAWING NUMBER SP-01 & SP-02	SHEET 4 / 13

This drawing is our property; it can't be reproduced or communicated without our written consent.

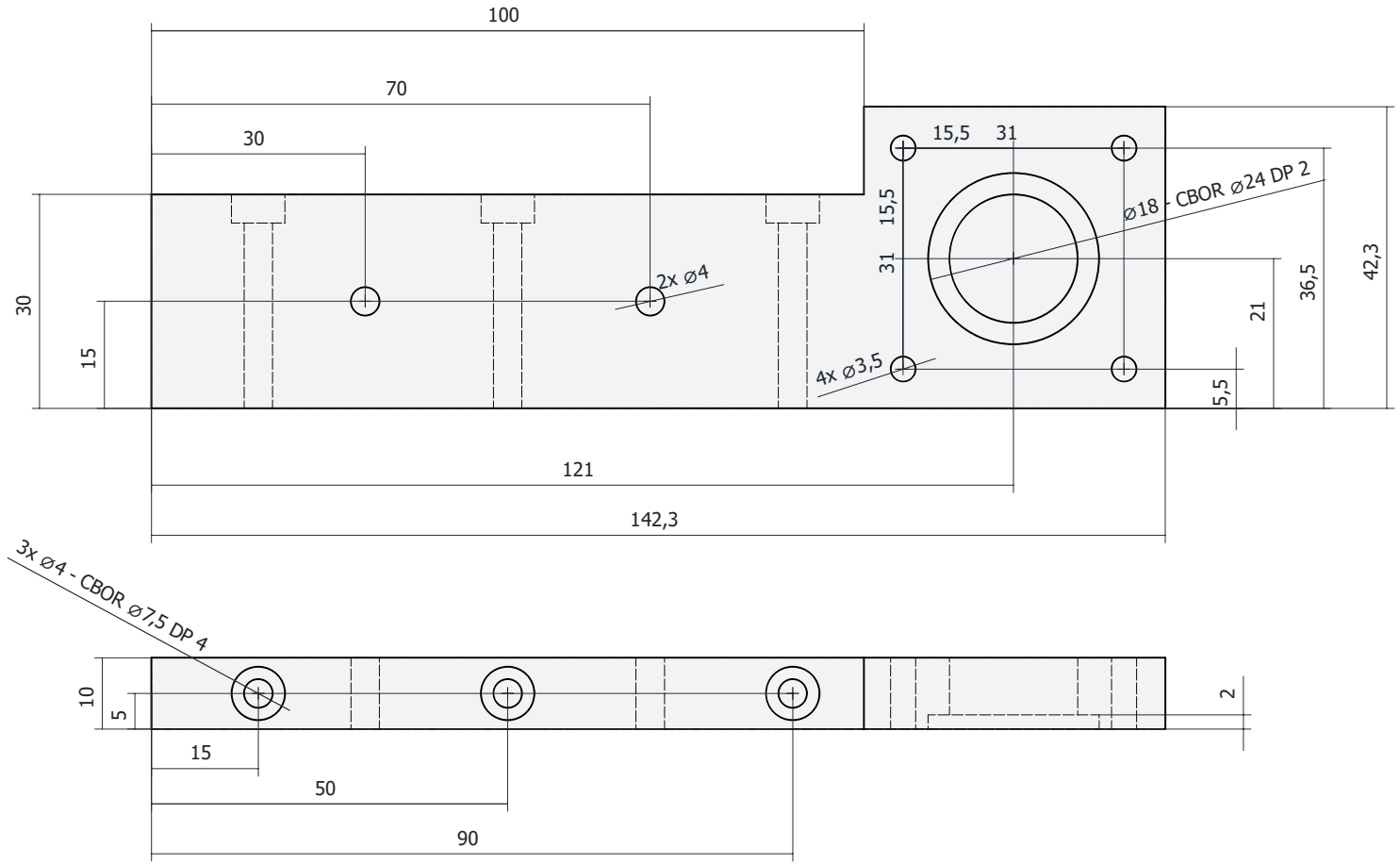

DESIGNED BY: L. Villiers DATE: 08/05/2026		Microphotography Rig M-axis Motor Mount Plate	
SIZE A4			
SCALE 1 : 1	WEIGHT (kg) N/A	DRAWING NUMBER M-01	SHEET 5 / 13

This drawing is our property; it can't be reproduced or communicated without our written consent.

G	_
F	_
E	_
D	_
C	_
B	_
A	_

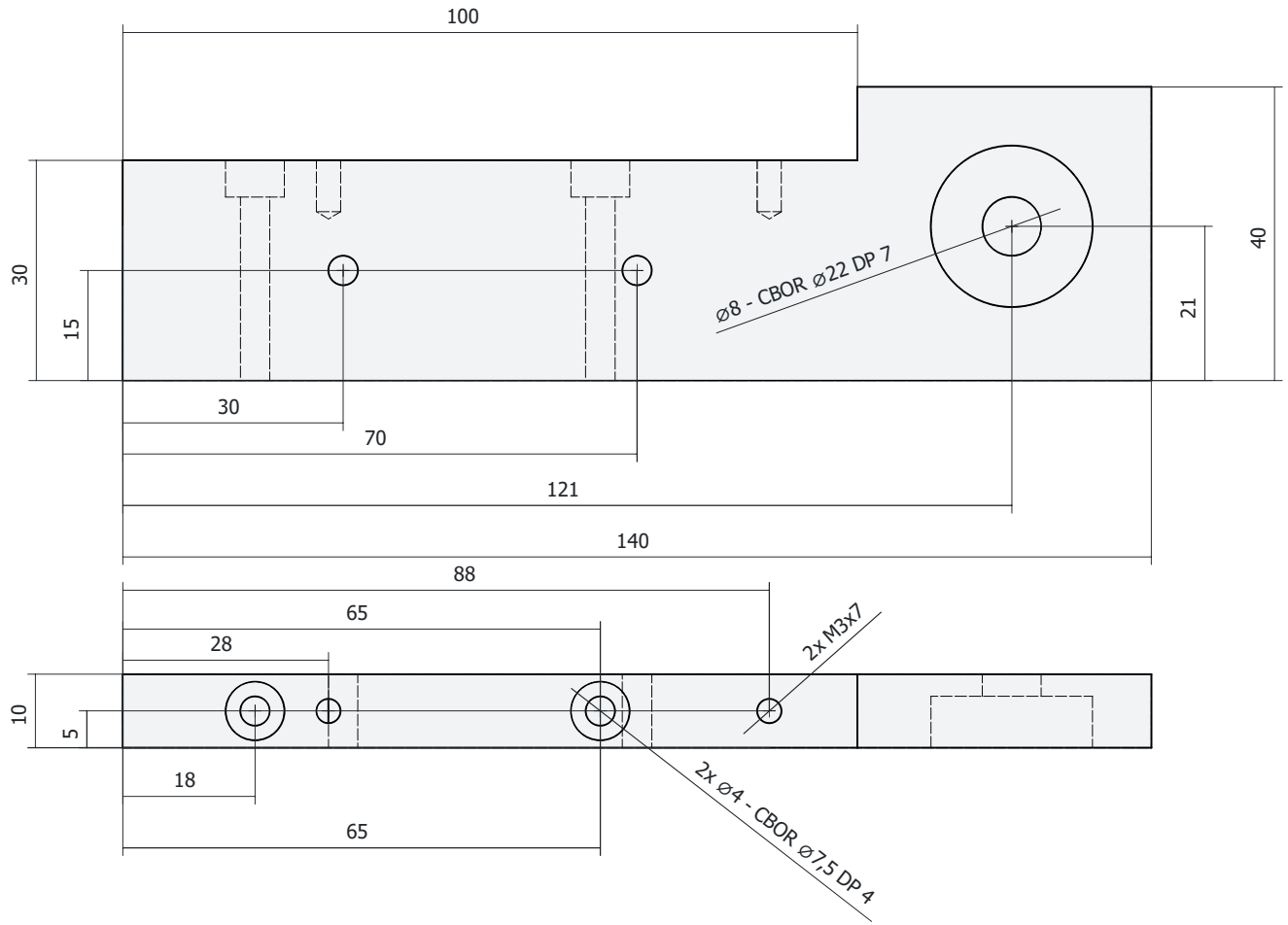

DESIGNED BY: L. Villiers DATE: 08/05/2026		Microphotography Rig M-axis End Plate		
SIZE A4				
SCALE 1 : 1	WEIGHT (kg) N/A	DRAWING NUMBER M-03	SHEET 6 / 13	

This drawing is our property; it can't be reproduced or communicated without our written consent.

G	_
F	_
E	_
D	_
C	_
B	_
A	_

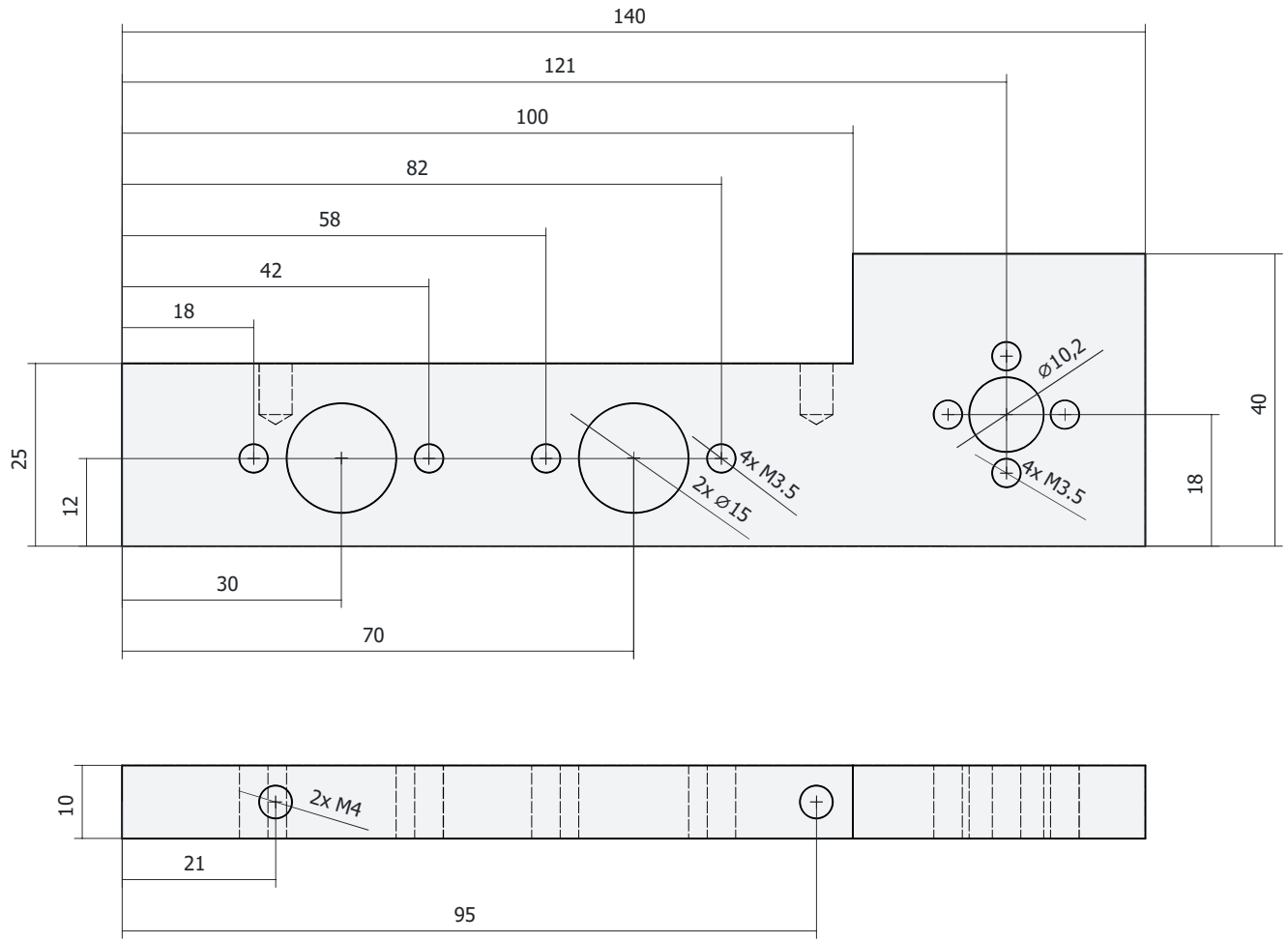

DESIGNED BY: L. Villiers DATE: 08/05/2026		Microphotography Rig M-Axis Carriage Plate		
SIZE A4				
SCALE 1 : 1	WEIGHT (kg) N/A	DRAWING NUMBER M-02	SHEET 7 / 13	

This drawing is our property; it can't be reproduced or communicated without our written consent.

G	_
F	_
E	_
D	_
C	_
B	_
A	_

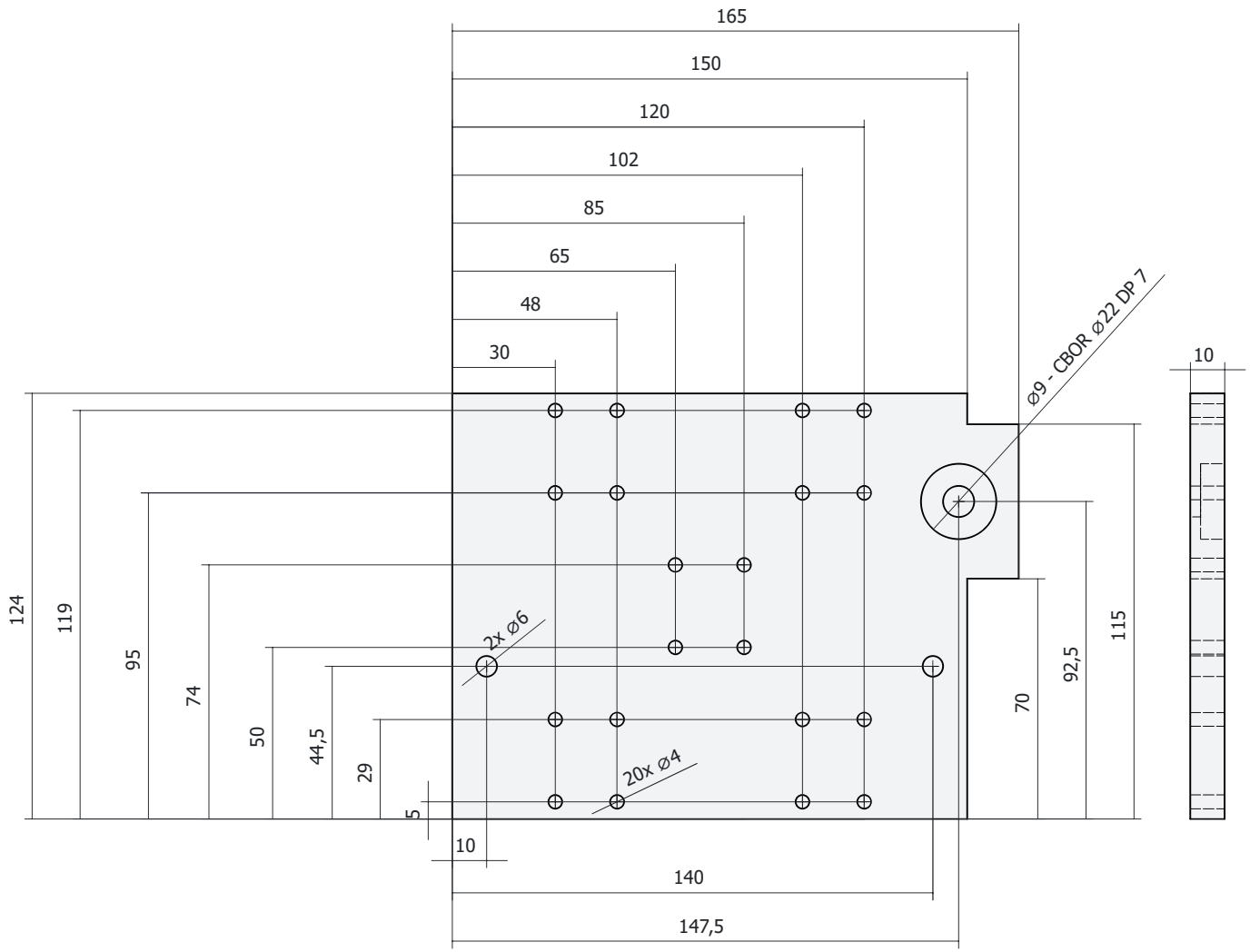

DESIGNED BY: L. Villiers DATE: 08/05/2026		Microphotography Rig Z-Axis Carriage Plate	
SIZE A4			
SCALE 1 : 2	WEIGHT (kg) N/A	DRAWING NUMBER Z-01	SHEET 8 / 13

This drawing is our property; it can't be reproduced or communicated without our written consent.

G	_
F	_
E	_
D	_
C	_
B	_
A	_

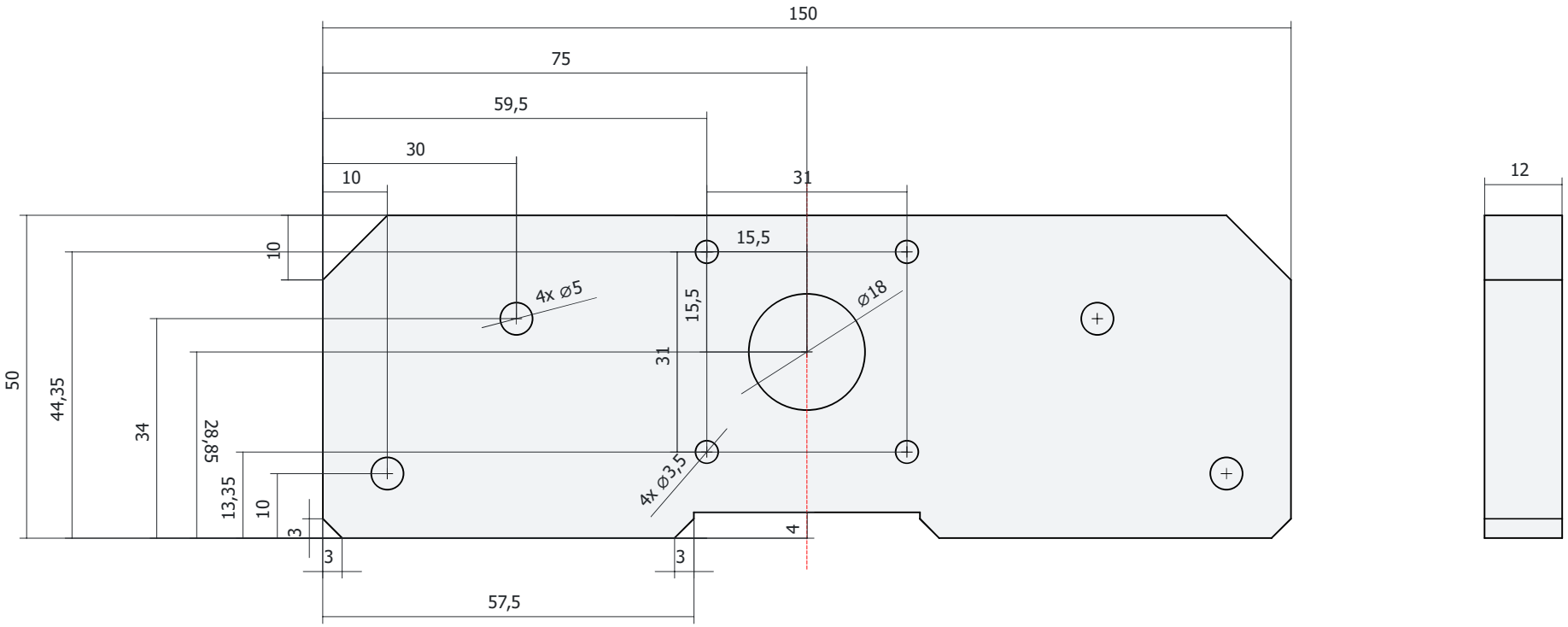

DESIGNED BY: L. Villiers DATE: 08/05/2026		Microphotography Rig Y-Axis Motor Mount Plate	
SIZE A4			
SCALE 1 : 1	WEIGHT (kg) N/A	DRAWING NUMBER Y-01	SHEET 9 / 13

This drawing is our property; it can't be reproduced or communicated without our written consent.

G	_
F	_
E	_
D	_
C	_
B	_
A	_

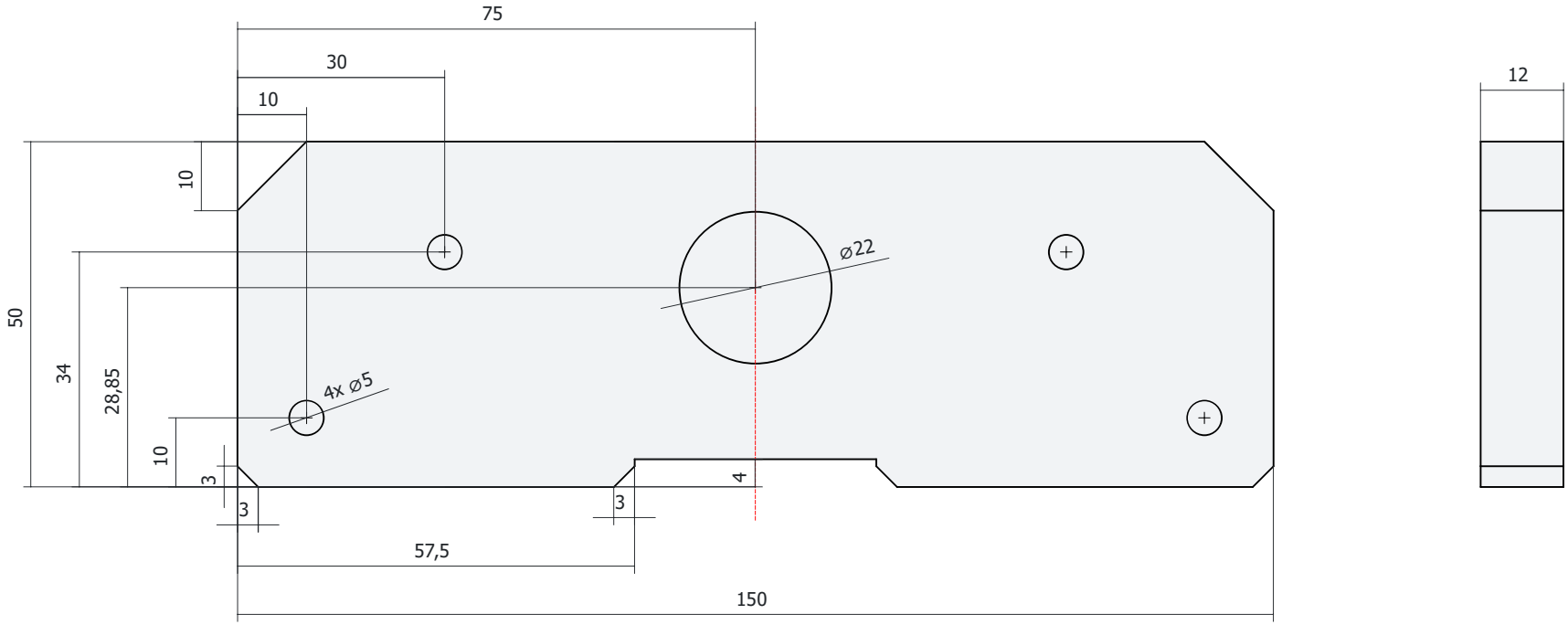

DESIGNED BY: L. Villiers DATE: 08/05/2026		Microphotography Rig Y-Axis End Plate		
SIZE A4				
SCALE 1 : 1	WEIGHT (kg) N/A	DRAWING NUMBER Y-02	SHEET 10 / 13	

This drawing is our property; it can't be reproduced or communicated without our written consent.

G	_
F	_
E	_
D	_
C	_
B	_
A	_

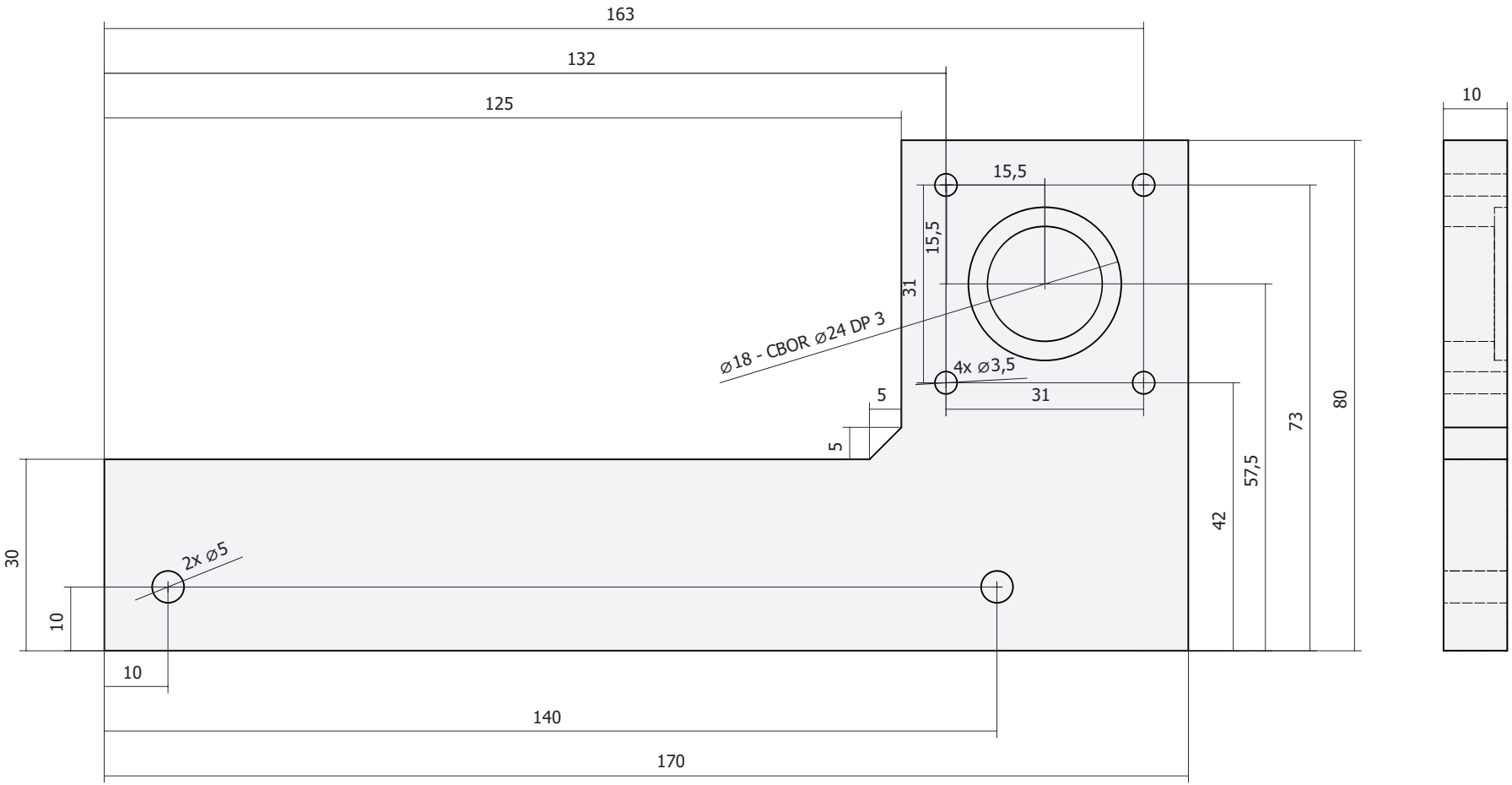

DESIGNED BY: L. Villiers DATE: 08/05/2026		Microphotography Rig Z-Axis End Plate		
SIZE A4				
SCALE 1 : 1	WEIGHT (kg) N/A	DRAWING NUMBER Z-02	SHEET 11 / 13	

This drawing is our property; it can't be reproduced or communicated without our written consent.

G	_
F	_
E	_
D	_
C	_
B	_
A	_

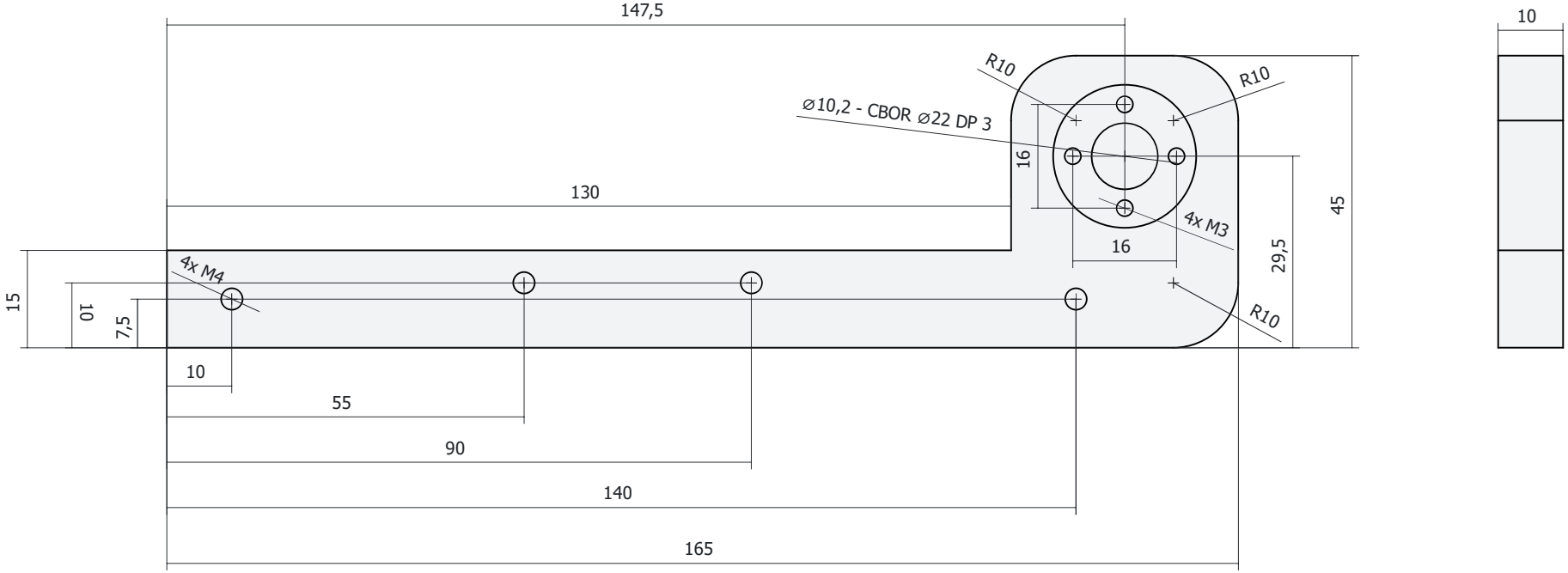

DESIGNED BY: L. Villiers DATE: 08/05/2026		Microphotography Rig Z-Axis Carrier		
SIZE A4				
SCALE 1 : 1	WEIGHT (kg) N/A	DRAWING NUMBER Z-03	SHEET 12 / 13	

This drawing is our property; it can't be reproduced or communicated without our written consent.

G	_
F	_
E	_
D	_
C	_
B	_
A	_

Item 1: Specimen holder

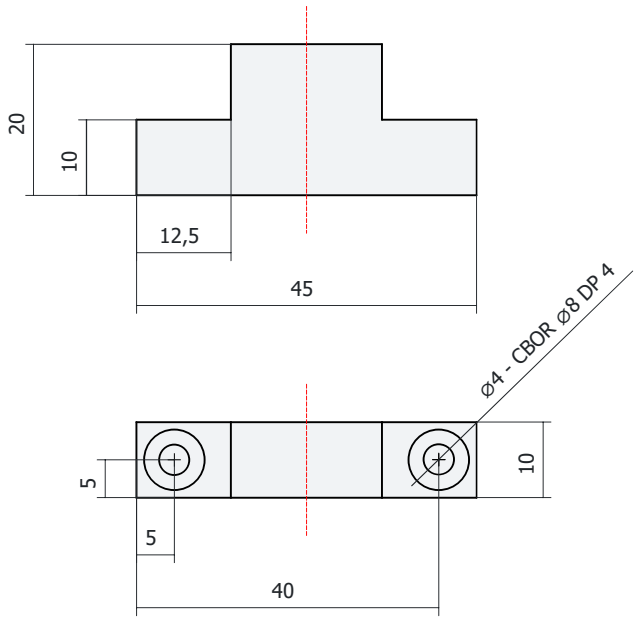

Item 2: Vertical Lead Screw Spacer - QTY: 2

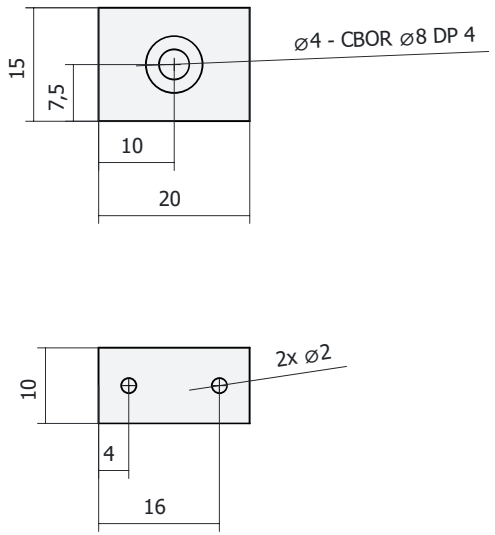

DESIGNED BY: L. Villiers DATE: 08/05/2026		Microphotography Rig Z-Axis Assembly Components	
SIZE A4			
SCALE 1 : 1	WEIGHT (kg) N/A	DRAWING NUMBER Z-04 & Z-05	SHEET 13 / 13

This drawing is our property; it can't be reproduced or communicated without our written consent.

G	_
F	_
E	_
D	_
C	_
B	_
A	_