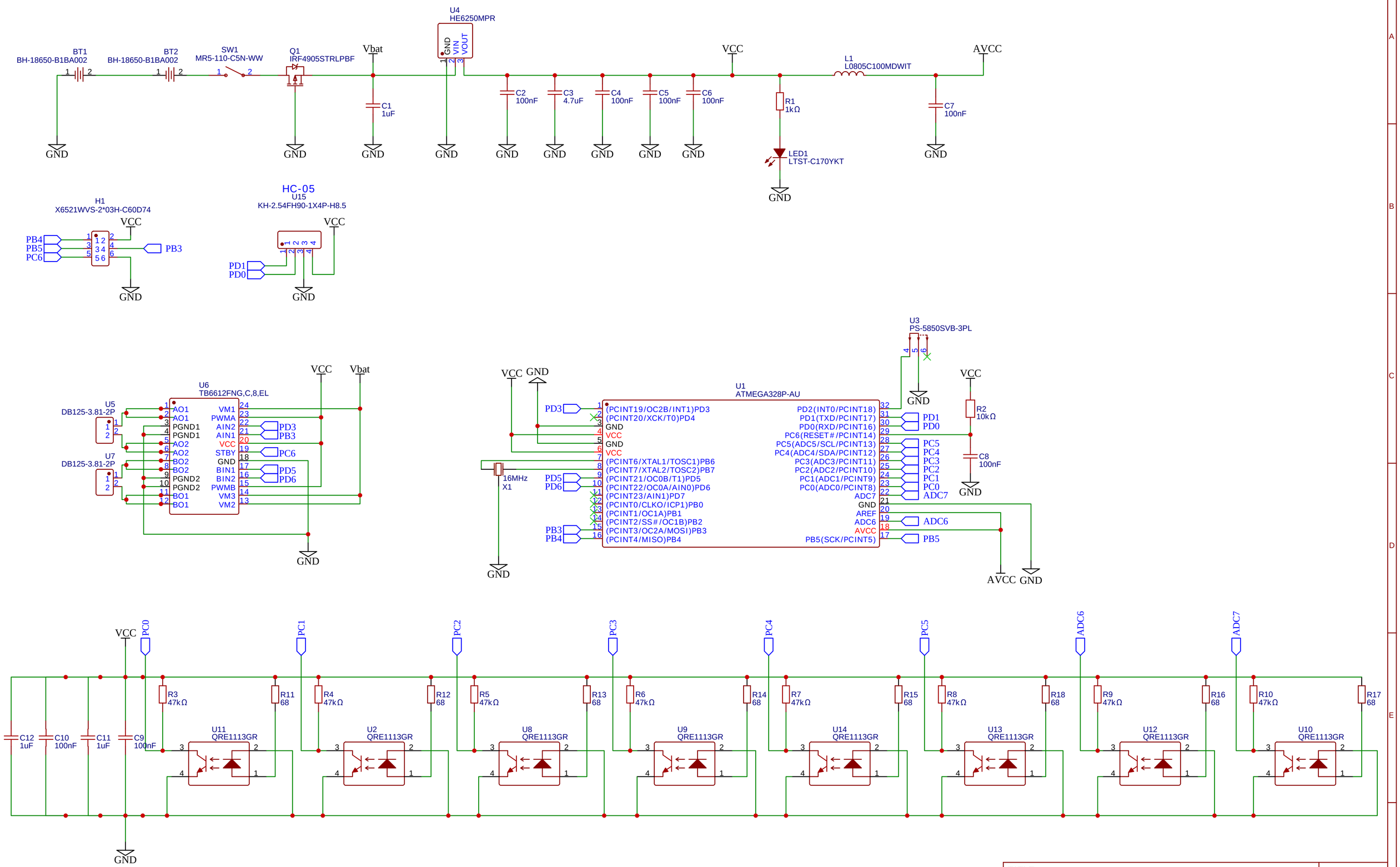

TITLE: Linefollower	REV: 1.0
HO GENT	Company: Hogent
	Sheet: 1/1
	Date: 2022-10-18 Drawn By: Louis Van Kerckvoorde