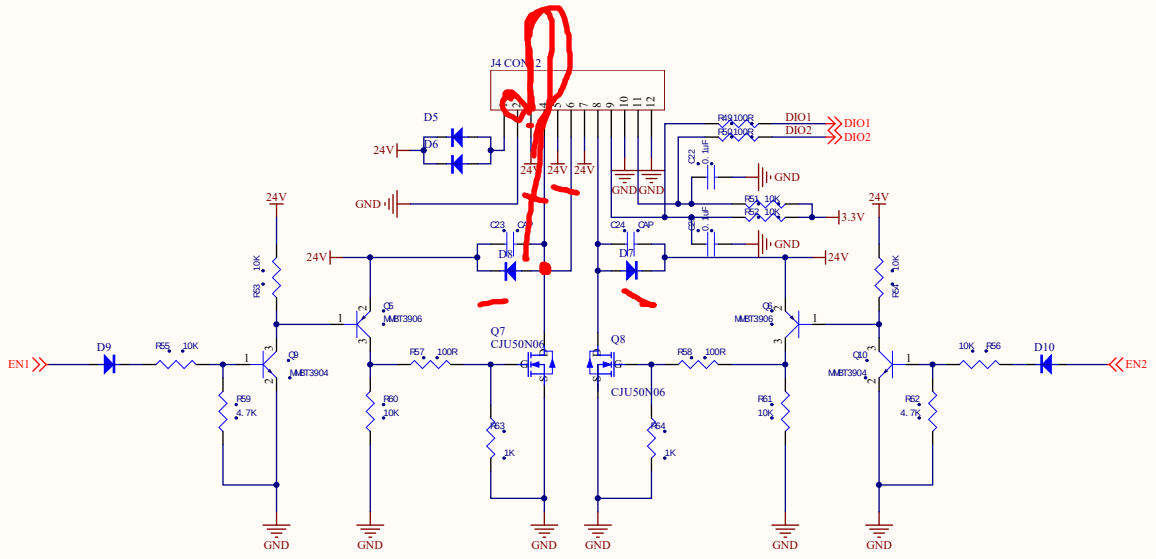

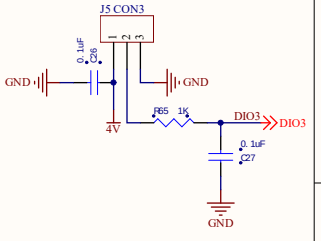

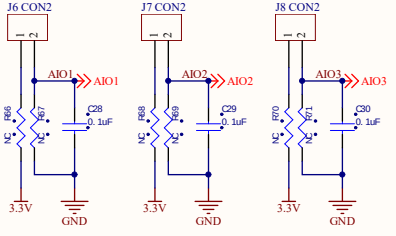

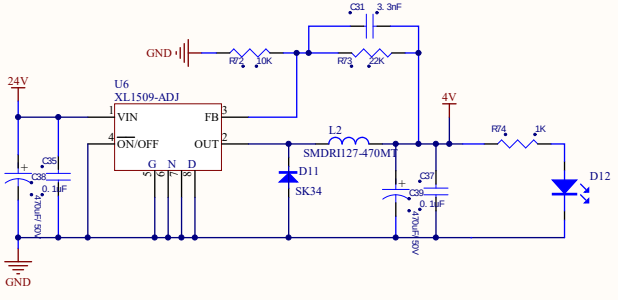

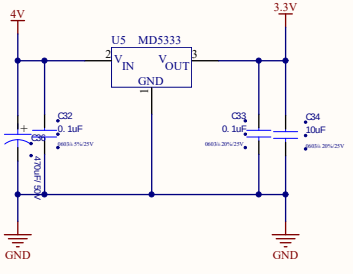

Items:		
Title: GPRS		
Size: A3	SheetTotal: 1 of 1	Revision: V1.0.0
Date: 2018/7/5		Time: 9:24:00
Author: LL		CheckedBy: LL
File: D:\BaiduNetdiskDownload\GPRS\GPRS\GPRS\P1_Power.SchDoc		

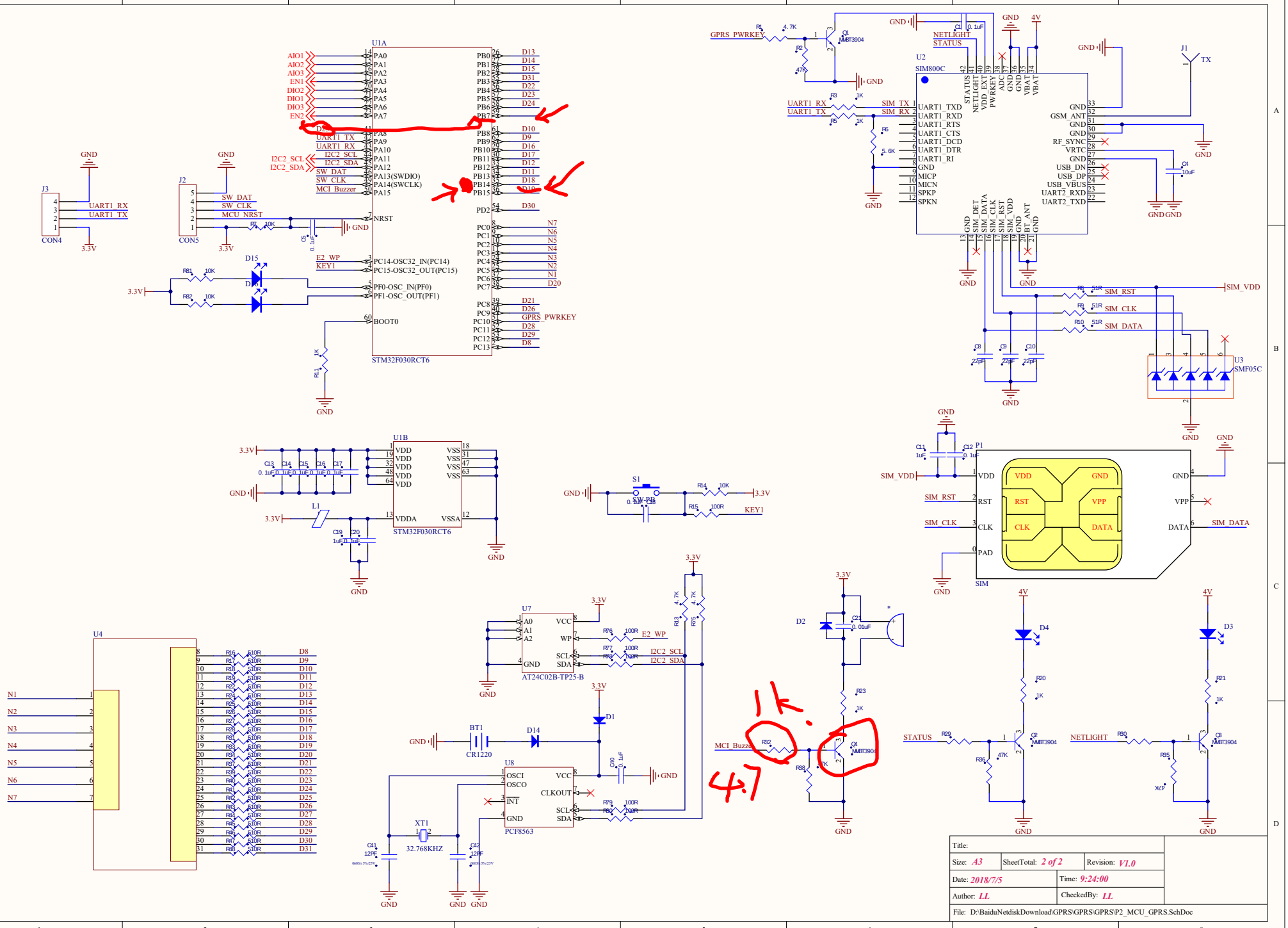

Title:		
Size: A3	SheetTotal: 2 of 2	Revision: V1.0
Date: 2018/7/5	Time: 9:24:00	
Author: LL	CheckedBy: LL	
File: D:\BaiduNetdiskDownload\GPRS\GPRS\GPRS\P2_MCU_GPRS.SchDoc		