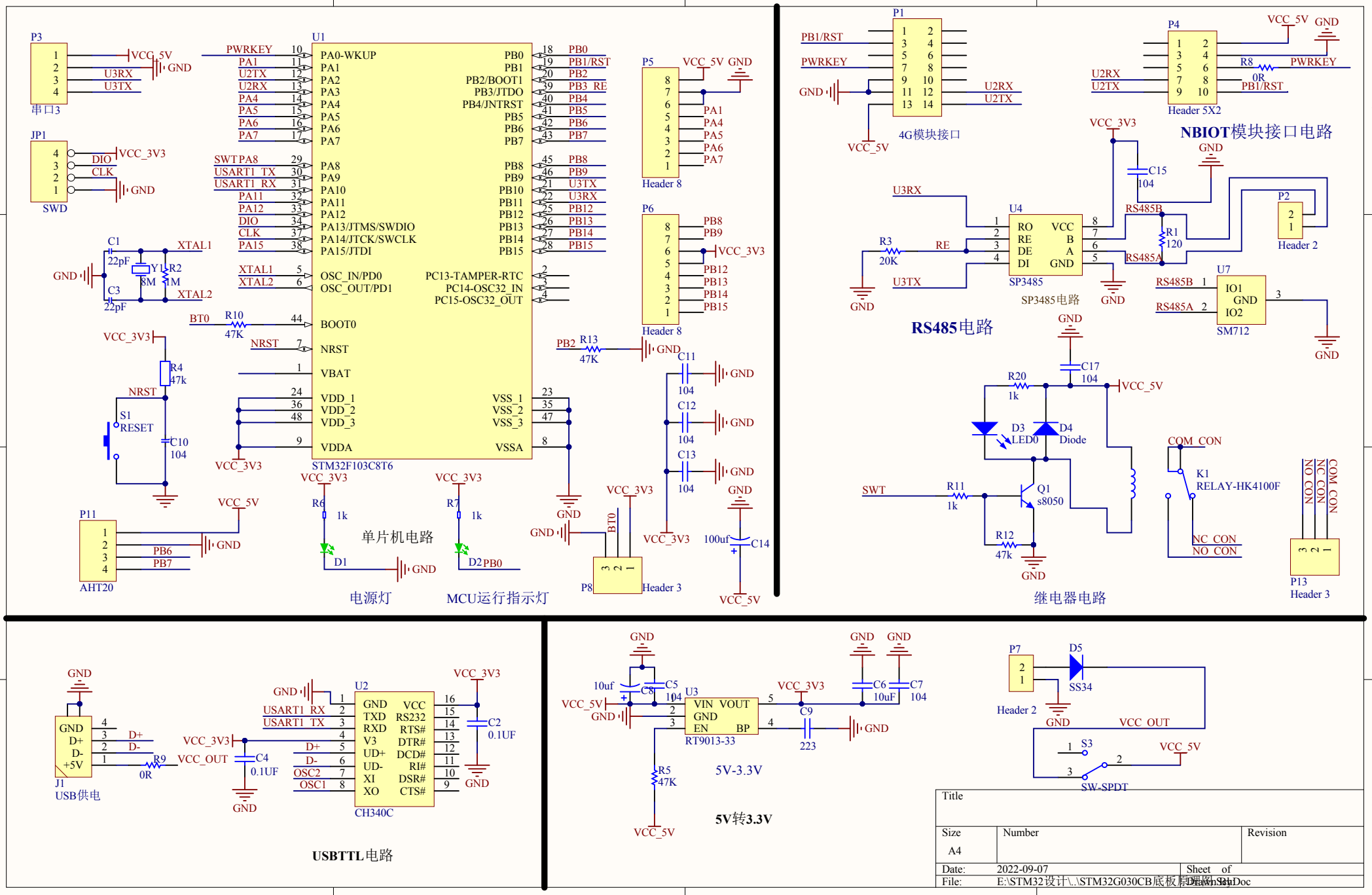
P3
串口3
JP1
SWD
U1
STM32F103C8T6
PA0-WKUP
PA1
PA2
PA3
PA4
PA5
PA6
PA7
PA8
PA9
PA10
PA11
PA12
PA13/JTMS/SWDIO
PA14/JTCK/SWCLK
PA15/JTDI
OSC_IN/PD0
OSC_OUT/PD1
BOOT0
NRST
VBAT
VDD_1
VDD_2
VDD_3
VDDA
PB0
PB1
PB2/BOOT1
PB3/JTDO
PB4/JNTRST
PB5
PB6
PB7
PB8
PB9
PB10
PB11
PB12
PB13
PB14
PB15
PC13-TAMPER-RTC
PC14-OSC32_IN
PC15-OSC32_OUT
VSS_1
VSS_2
VSS_3
VSSA
P5
Header 8
P6
Header 8
P11
AHT20
P8
Header 3
单片机电路
电源灯
MCU运行指示灯
P1
4G模块接口
P4
Header 5X2
NBIOT模块接口电路
U4
SP3485
SP3485电路
RS485电路
U7
SM712
P2
Header 2
P13
Header 3
继电器电路
K1
RELAY-HK4100F
Q1
s8050
D3
LED0
D4
Diode
J1
USB供电
U2
CH340C
USBTTL电路
U3
RT9013-33
5V-3.3V
5V转3.3V
P7
Header 2
D5
SS34
S3
SW-SPDT
Title
Size
A4
Number
Revision
Date: 2022-09-07
Sheet of
File: E:\STM32设计\..\STM32G030CB底板原理图.SchDoc